Westfalia Separator AG

Instruction Manual and Parts List

Nr. 1176-9001-001

Edition 0486

Skimming separator with self-cleaning bowl

Model MSB 60-01-076

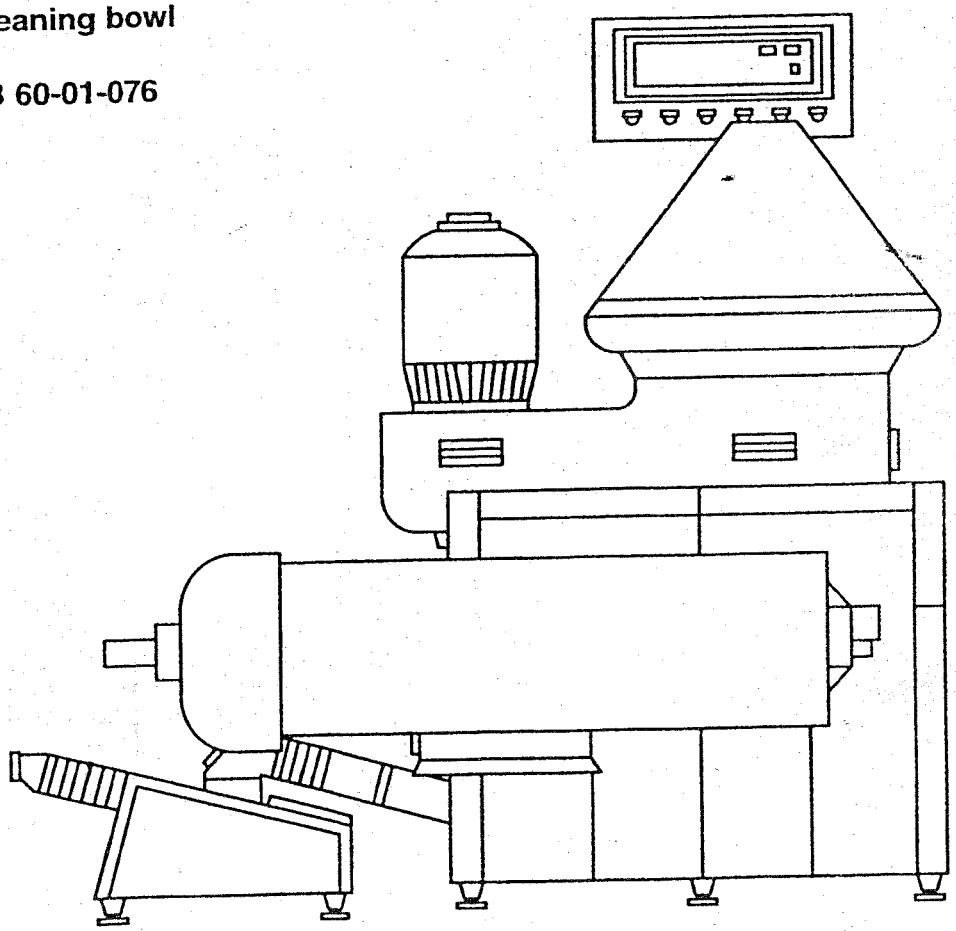

GEA

Unternehmensbereich
Prozeßtechnik

Westfalia Separator AG
D-59302 Oelde (F. R. Germany)

Type		No.	
built in		inner Ø of bowl mm	
Rpm of bowl			
Permissible density of product to be treated			
heavy liquid kg/dm^3		solids kg/dm^3	

For your safety



- **Strictly adhere to instructions marked with this symbol.**

  This avoids damage to the machine and other units.



- **Take special care when carrying out operations marked with this symbol –**

  otherwise danger to life.

- **Observe accident prevention regulations.**

  The local safety and accident prevention regulations apply unconditionally to the operation of the separator.

- **Instruction manual**

  Follow only the instructions given in this manual

- **Operate the separator only in accordance with agreed process and operating parameters**

- **Maintain the separator –**

  as specified in this manual.

- **Carry out safety checks on the separator –**

  as described in chapter "Safety precautions" and "Servicing" in this manual.

- **Liability for the function of the machine passes to the owner.**

  Liability for the function of the machine passes unconditionally to the owner or operator irrespective of existing warranty periods in so far as the machine is improperly maintained or serviced by persons other than Westfalia Separator service personnel or if the machine is not applied in accordance with the intended use.

  Westfalia Separator AG shall not be liable for damage which occurs as a result of non-observance of the above. Warranty and liability conditions in the Conditions of Sale and Delivery of Westfalia Separator AG are not extended by the above.

SAFETY PRECAUTIONS:

Correct usage

The separator is designed

- in accordance with the chemical and physical properties of the product specified by the customer and
- in accordance with the method of application of the separator agreed with Westfalia Separator AG.

In particular, products not conforming to the specifications the nameplate may not be used.

Any mode of operation deviating herefrom is not proper and correct.

Prior to any intended deviation from the agreed operating mode, it is therefore imperative to obtain the consent of WestfaliaSeparator AG.

Safety stickers on the machine

The following warnings must be attached to the machine as self-adhesive stickers. The stickers must always be in perfect condition.

- Clean dirty stickers.
- Replace damaged stickers.

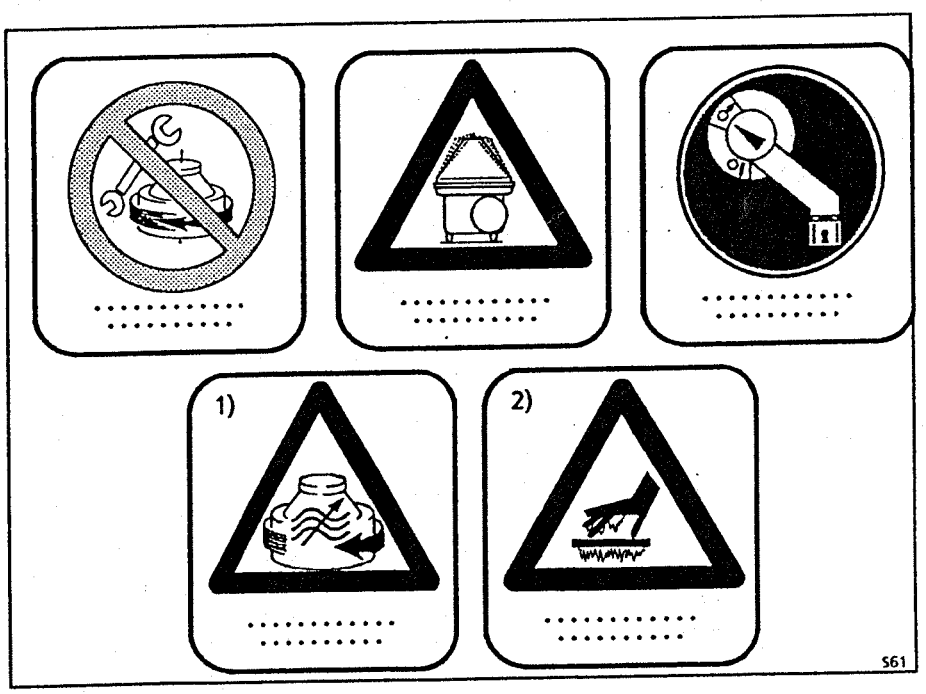

Fig.38

1) Only in case of operation with frequency converter

2) Only in case of hot operation

Assembly

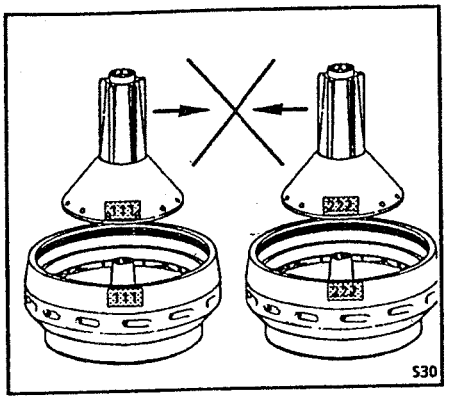

Fig. 40

- If the plant has several centrifuges, be careful not to interchange parts of different bowls since each bowl has been balanced individually.
  The bowl parts are marked with the serial-number of the machine or with the last three digits of the serial-number.

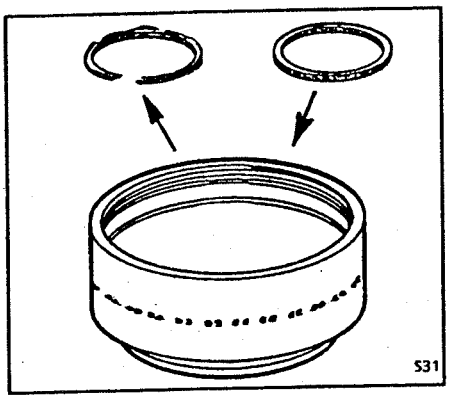

Fig. 41

- Damaged parts must be replaced immediately by new parts.

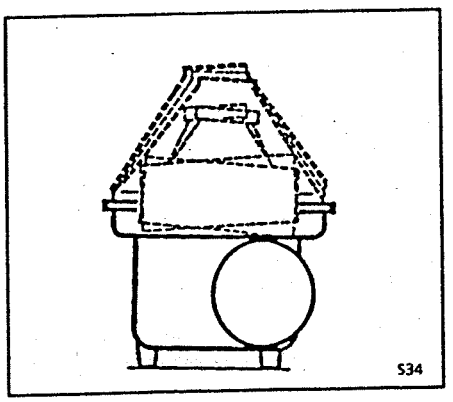

Fig. 42

- After installing spare bowl parts, the bowl must be re-balanced.

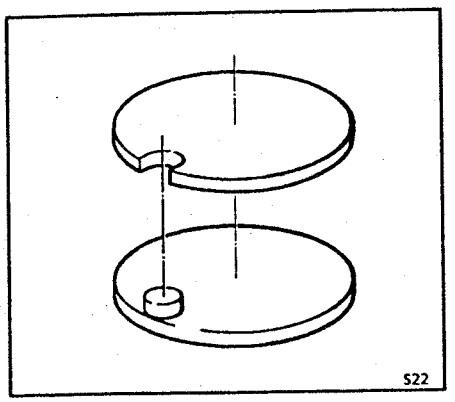

Fig. 43

- The bowl parts are arranged in fixed positions relative to one another.
- Locking devices and alignment marks must be in perfect condition.
  The bowl must not be operated if these locking devices and alignment marks are not in perfect condition.

Basic operating principles

Separators are used for the separation of liquid mixtures or for the separation of solids out of liquids or liquid mixtures.

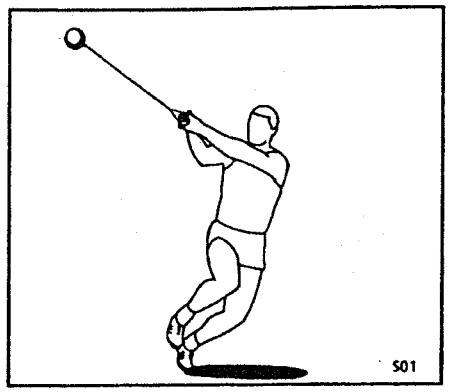

Fig. 39

High centrifugal forces are produced in the rotating bowl.

Under the influence of the centrifugal forces, separation of the liquid mixture and/or ejection of the solids particles takes place most rapidly.

The specifically heavier components are displaced to the bowl periphery, whereas the specifically lighter components are displaced towards the centre of the bowl.

The high centrifugal force is produced by very high bowl speeds. On the one hand, high bowl speeds signify high efficiency, while on the other hand, they signify high material stressing of the separator.

Bowl speed and product

The max. permissible bowl speed is an important parameter when rating the separator. It depends on the chemical and physical properties of the product such as

- temperature (if higher than 100 °C or lower than 0 °C),
- density of the fluid and solid components,
- aggressiveness of the product as regards corrosion and erosion (has influence on the selection of the bowl material).

The bowl speed is determined on the basis of these parameters allowing for an adequate safety margin.

Before using a product with properties different from those stated when placing the order, it is imperative to obtain the manufacturer's approval.

Operations on the separator

The separator works reliably, provided that it is operated and looked after in accordance with our operating Instructions.

Special attention must be given to:

- assembly
- starting
- shutting-down
- maintenance and servicing

Before start-up

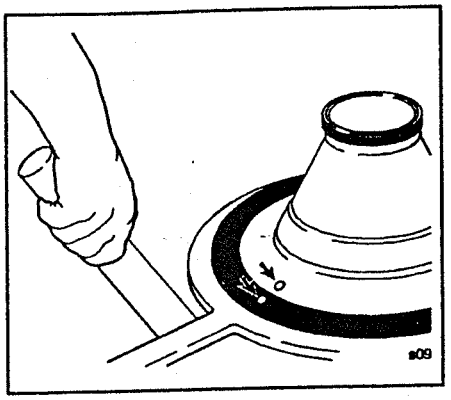

Fig. 48

- Check that the bowl lock ring has been firmly tightened.
- The "O" marks on bowl bottom or bowl top and on the lock ring must be aligned.

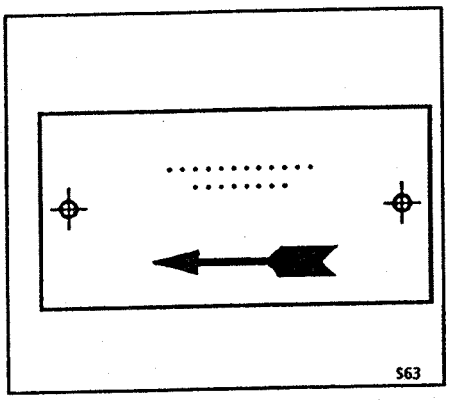

Fig. 49

- The bowl must rotate in clockwise direction (see arrow on frame or solids collector).

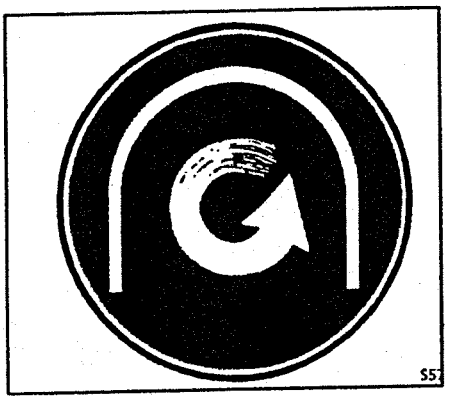

Fig. 50

- The separator may only be operated with protection devices conforming to EN 294.
  Equip solid and liquid discharges accordingly.

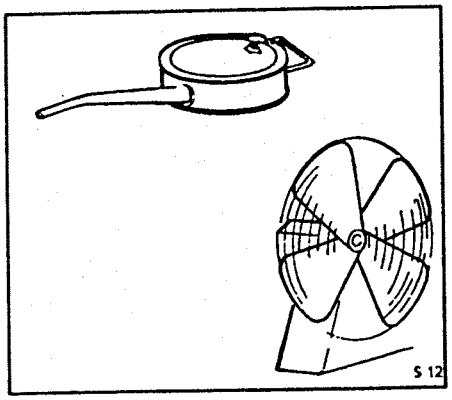

Fig. 51

- Check that the lubrication and cooling systems are serviceable.

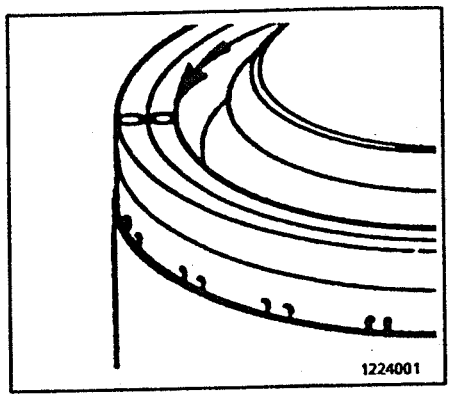

Fig. 44

- When assembling the bowl, be sure to strictly adhere to the instructions given in chapter "bowl", in order to avoid undue unbalance.
- Before starting the bowl, be dure to fit all parts.
- Tighten the bowl lock ring securely: the "O" marks on the bowl bottom or bowl top and on the lock ring must be in line with each other.

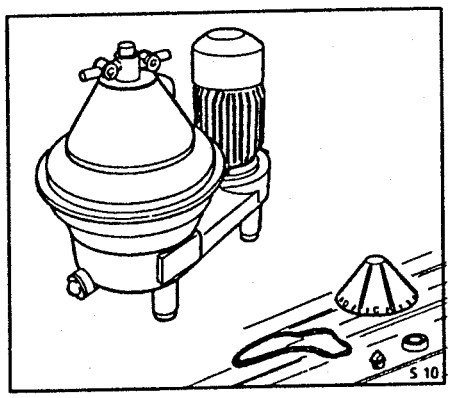

Fig. 45

- Check if the machine is completely assembled and properly installed.

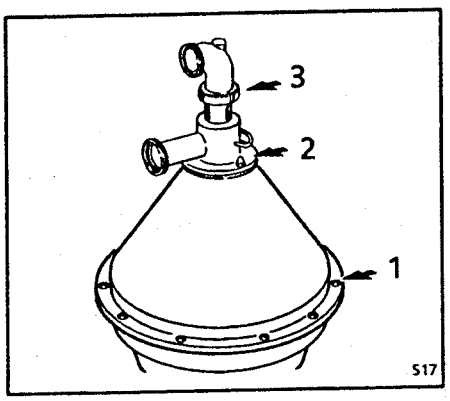

Fig. 46

- Carefully fasten hood 1, feed and discharge housing 2 and centripetal pump 3.

Electrical appliances

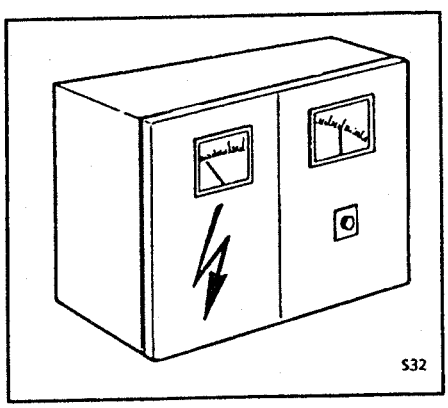

Fig. 47

- The governing accident prevention regulations apply for the electrical appliances and installations.
- The frequency and voltage of the power supply must correspond to the machine specifications.
- Carry out potential equalization.
- Observe legal regulations; e.g. in the EU:
  - Low-voltage guideline 73/23/EWG
  - Electro-magnetic compatibility 89/336/EWG.



Fig. 56

In case of frequency converter operation:

- Do not under any circumstances manipulate the frequency converter to exceed the permissible bowl speed (see maker's nameplate).
- The separator may only be operated with an independent device for speed limiting.



Fig. 57

- Do not feed product which is categorised as explosive.
- The separator must not be used in areas where explosion protection is required.



Fig. 58

- When processing products harmful to persons, observe the pertinent safety regulations.
- Refer to the safety data sheet of the product.
- Wear protective clothing.

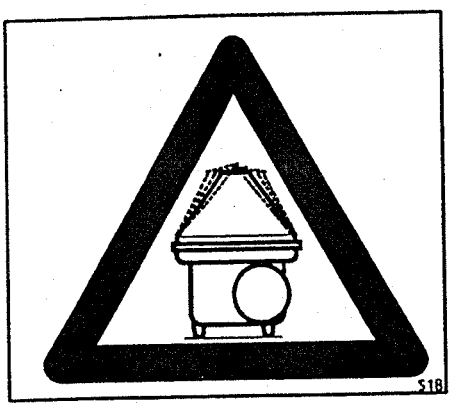

Fig. 59

- Stop the separator immediately if unusual noises or vibrations occur.

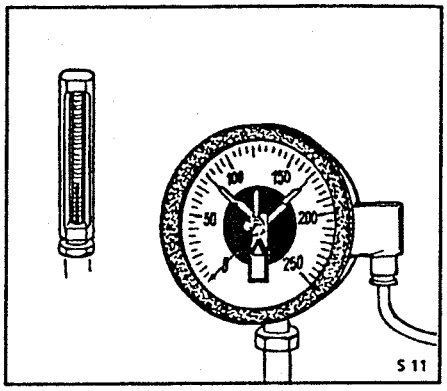

Fig. 52

- Check whether the supervisory equipment is operational and the correct limit values are adjusted.
- When hoods, concentrate collectors and vessels are pressurized, e.g. by
  - inert gas,
  - cooling,
  - steam sterilization etc.

  the pressures stated on the nameplate must not be exceeded.

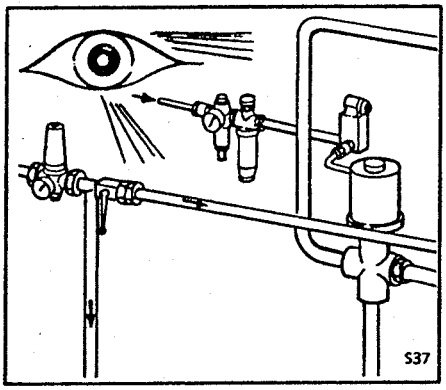

Fig. 53

- Check that the product lines are set to operation.
- Regularly check hoses for signs of ageing.
- Check sight glasses for mechanical damage.
- Replace damaged parts by parts which are as good as new.

Operation

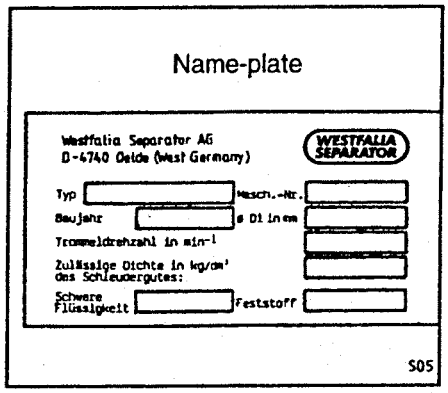

Fig. 54

- Refer to chapter »operation«.
- Note nameplate. The values for
  - bowl speed
  - density of the heavy liquid,
  - density of solids (centrifugally dry)

  are max. values and must not be exceeded.



Fig. 55

- Wear ear protection.

Maintenance and repair

Unfavourable operating conditions may require shorter maintenance intervals. The factors listed below are unfavourable because they either attack the separator material directly or impair the lubrication/cooling system:

- aggressive product (chemical or physical)
- high product temperature
- product with grease-decaying properties
- environment: temperature, dust and vapours

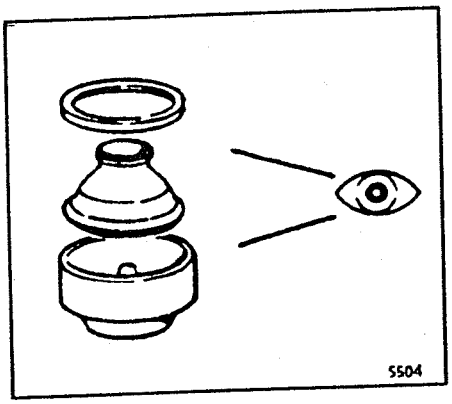

Fig. 63

Particularly stressed parts such as bearing hub, bowl hub and other bowl parts with a large outer diameter must be checked on a regular basis to ensure safe and efficient operation.

Timely maintenance and replacement of worn or damaged machine parts is essential for safe operation of the machine.



Maintenance and repair work may only be carried out by the customer to the extent as described in this instruction manual.



Maintenance and repair work not described in this manual may only be carried out by the manufacturer or by "repair shops" authorized by the manufacturer.

We, therefore, recommend in your own interest to have your separator inspected by our service engineers at regular intervals. Such inspections will keep your separator working reliable and prevent undesirable shut-downs.

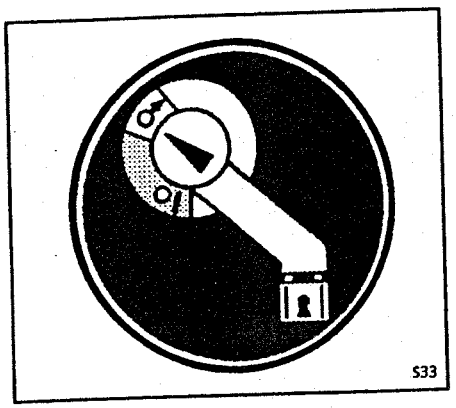

Fig. 64

Before maintenance and servicing:

- switch off all electrical appliances via the main switch,
- secure installation against unintended re-starting with locking devices.

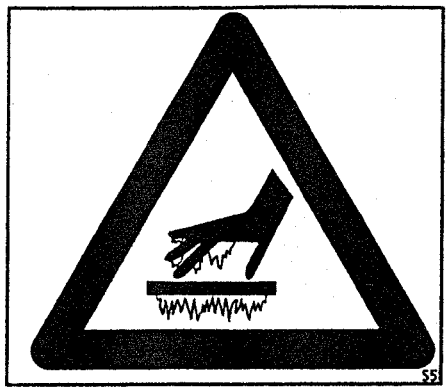

Fig. 60

Only in case of hot operation:

- Product-contacting parts such as
  - pipes and hoses,
  - hood,
  - solids collector

  reach temperatures over 80 °C.

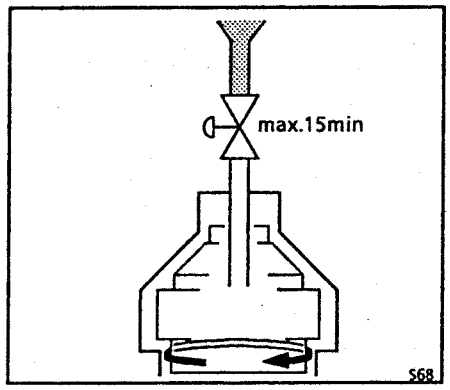

Fig. 61

- The bowl is not allowed to run without liquid supply for more than 15 minutes, as otherwise it would result in overheating of the bowl material.

Shut-down and »Emergency-Off«

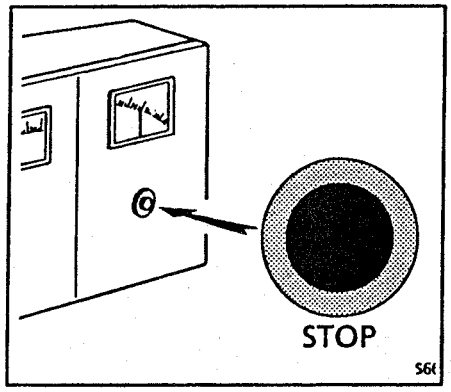

Fig. 62

- For shut-down refer to the chapter "operation".

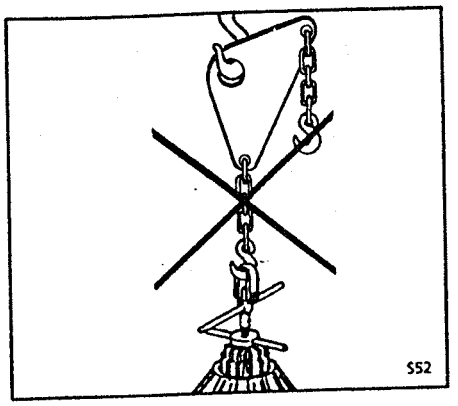

Fig. 69

- Load-carrying equipment such as lifting devices for
  - bowl or distributor,
  - chains etc.

  may only be used for work routines as described in this instruction manual.
- Do not use damaged or incomplete load carrying equipment.

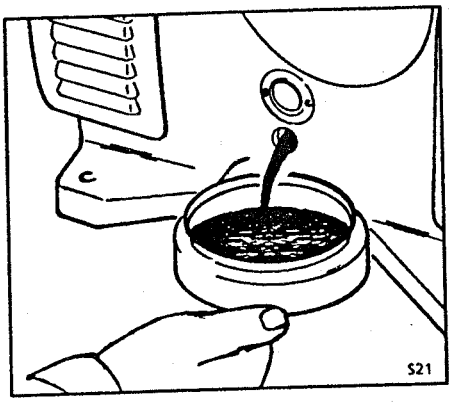

Fig. 70

- Collect dripping oil to prevent danger of slipping or product infection.
- When handling waste oils note:
  - They can be injurious to health, depending on their chemical composition.
  - Waste oil must be disposed of in accordance with local regulations.

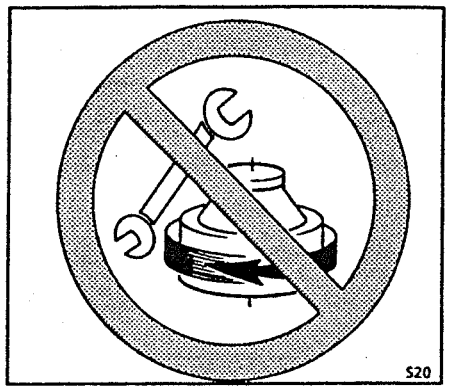

Fig. 65

- **Do not loosen any part before the bowl has come to a standstill.**
- For checking standstill refer to chapter "bowl".

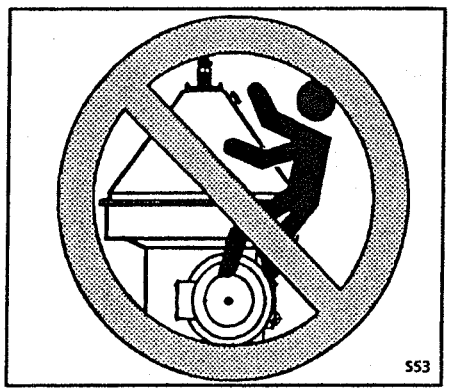

Fig. 66

- Do not climb onto or stand on the machine or parts of the machine.
- Make provision for and use a sturdy working platform.

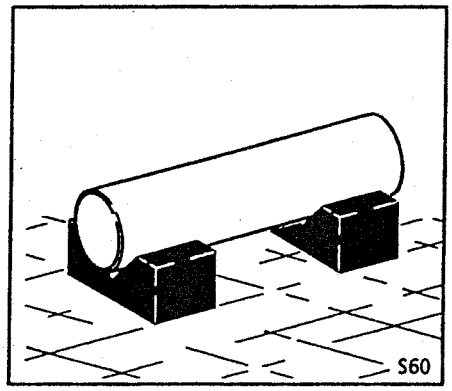

Fig. 67

- Place dismantled machine parts on a suitable base, e.g. rubber mat.
- Take steps to prevent machine parts from overturning and rolling away.

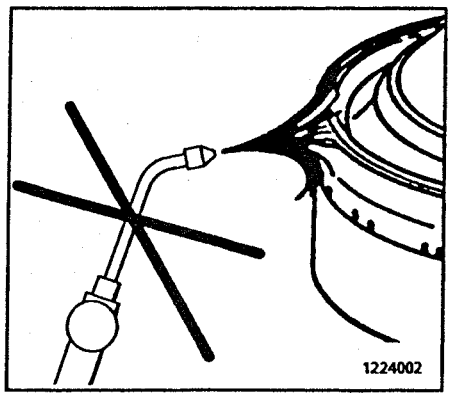

Fig. 68

- **Do not heat bowl parts with the naked flame.**
- **Bowl parts must never be welded. This also applies for hood and solids collector parts of steam-sterilizable separators.**
- Even during cleaning the bowl parts the temperature must not exceed 100 °C.

Erosion

Erosion is caused by solid particles in the process liquid.
These solid particles grind marks into the surfaces with which they come into contact.

The following factors favour the occurence of erosion:

- hard solids particles
- high throughput capacities

The first signs of erosion should be carefully observed and documented. Erosion can deepen rapidly, thereby weakening the bowl material.

Contact your nearest Westfalia Separator representative for a thorough examination. Information on the nature of the damage can be provided by photos, plaster casts or lead molds.

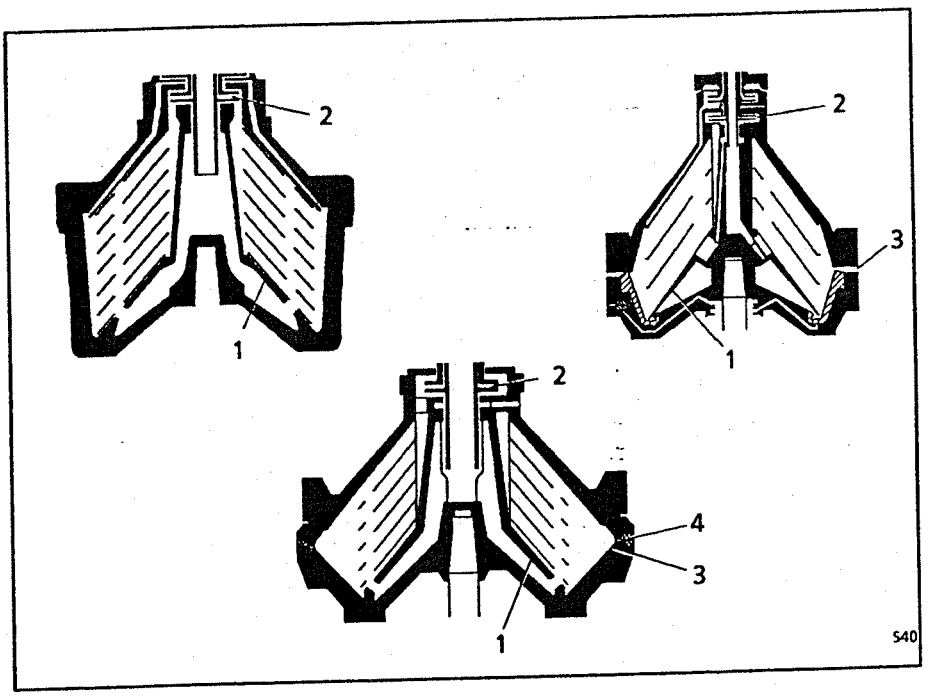

Fig.73

The surfaces most susceptible to erosion are:

1) the bottom of the distributor, the rising channels and the ribs,
2) the centripetal pump (cavitation),
3) all surfaces in the area of the solids discharge ports,
4) the nozzles.

Corrosion

Corrosion can also affect bowl parts made of stainless steel. This corrosion can be flat-spread or pit- or crack-shaped and merits special attention.

Corrosion on stainless steel bowl material should be examined thoroughly and documented.

Flat-spread corrosion can usually be measured (reduction of wall thickness)

Pit- or crack-shaped corrosion cannot be measured without the risk of damage. At the initial stage pit-shaped corrosion is generally caused by chlorine ions.

Depending on the stressing of the part, pit-shaped corrosion can result in crack-shaped corrosion.

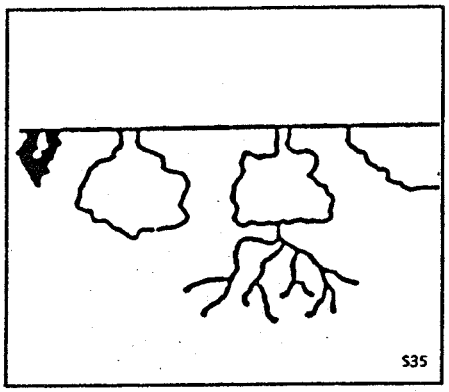

Possible formation of pit-shaped corrosion.

Fig. 71

Such pittings can only be investigated by a materials expert.

In case of crack-shaped corrosion attack with or without superposed flat-spread and pit-shaped corrosion on main bowl components, **the machine must be shut down immediately.**

Contact your nearest Westfalia Separator AG representative for a thorough examination.

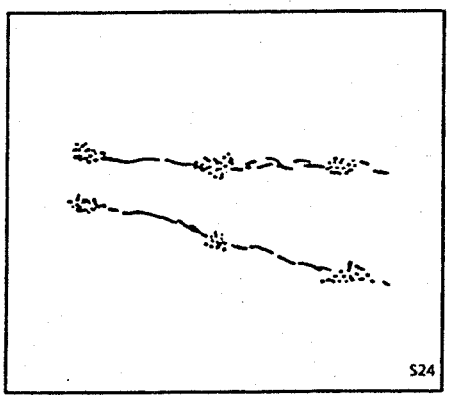

Pittings

Pittings which are close together or form a linear pattern can signify crack formation beneath the surface.

Such pittings should be investigated by a materials expert.

Fig. 72

CONTENTS

	Page
Operating safety of the separator	
Important hints	0/6
Sectional view of the separator	0/7
Dimensioned drawing	

Working Instructions

1	**Installation:**	1/1
1.1	Transport	1/2
1.2	Installation	
2	**Lubrication:**	2/1
2.1	Lubrication of separator bearings	2/2
2.2	Lubrication of threads and contact surfaces on bowl parts	2/2
2.3	Lubrication of motor bearings	
3	**Motor Connection:**	3/1
3.1	Three-phase AC motor	3/1
3.2	Direction of rotation of the bowl	3/1
3.3	Speed and starting time of the bowl	3/1
3.4	RPM meter	
4	**Bowl, Feed and Discharge Connections:**	4/3
4.1	Assembly of the bowl	4/8
4.2	Assembling the feed and discharge connections	
4.3	Removing the feed and discharge connections, Dismantling the bowl	4/9 4/13
4.4	Removal and installation of Polyamid gasket	4/14
4.5	Removing the piston valve	4/15
4.6	Hydraulic disc stack compressing device	
5	**Technical Information:**	5/1
5.1	Functioning of the hydraulic system of the bowl	5/3
5.2	Timing unit	5/3
5.3	Operating-water connection	5/3
5.3.1	Arrangement of the solenoid valves	5/4
5.3.2	Pressure switch	
5.3.3	Solenoid valves: Operating principles; maintenance; locating the electric troubles; Technical data	5/5
6	**Operation:**	6/1
6.1	Starting the separator	
6.2	Sediment ejection:	6/3
6.2.1	Partial sediment ejection	6/4
6.2.2	Complete sediment ejection	6/4
6.2.3	Manually controlled sediment ejections	6/4
6.3	Stopping the separator	

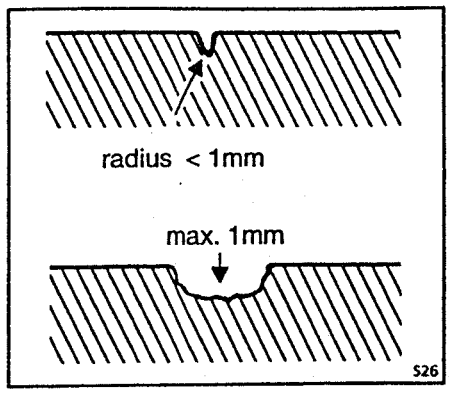

Fig. 74

Signs of erosion which you should immediately report to your nearest Westfalia Separator representative:

- The bottom of the erosion mark has a radius smaller than 1 mm (large notch effect).
- The depth of erosion mark exceeds 1 mm at the deepest point.

		Page
7	**Cleaning:**	
7.1	Cleaning-in-place	7/1
7.2	Cleaning the bowl	7/1
7.3	Cleaning the upper section of the frame	7/2
7.4	Cleaning the operating-water feeding system	7/2
7.5	Cleaning the gear chamber	7/2
7.6	Cleaning prior to a long-term shut-down of the separator	7/2
8	**The Gear:**	
8.1	Removing the vertical gear parts	8/1
8.2	Re-assembly of the vertical gear parts:	
8.2.1	Important hints for re-assembly	8/3
8.2.2	Assembling the neck bearing bridge	8/4
8.2.3	Installing spring column into bottom bearing	8/4
8.3	Bowl height	8/5a
8.4	Removal of the horizontal gear parts:	
8.4.1	Removing the motor	8/6
8.4.2	Removing the fluid clutch	8/6
8.4.3	Removing the worm wheel shaft	8/7
8.5	Re-assembling the horizontal gear parts	8/8
9	**The Fluid Clutch:**	
9.1	General	9/1
9.2	Checking the oil level	9/1
9.3	Re-filling oil	9/2
9.4	Type of oil	9/2
9.5	Dismantling the fluid clutch	9/3
9.6	Re-assembling the fluid clutch	9/3
10	**Trouble Shooting:**	
10.1	General	10/1
10.2	Bowl performance	10/4
11	**Lubrication and Maintenance Schedule**	11/1

List of Parts

Important hints for ordering parts	12/1
Frame and hood	13/1
Vertical gear parts	14/1
Horizontal gear parts	15/1
Pneumatic brakes (on special order only)	15/3
Fluid clutch	16/1
Operating-water connection	17/1
Solenoid valve	17/3
Flow constrictor	18
Feed and discharge connections and centripetal pump	18/1
Bowl	19/1
Tools and accessories	20/1
Sterilizing tank	21/1
Flowmeter	22/1

Installation of the flow constrictor in the piping system of a milk processing plant 23/1

1 Installation

1.1 Transport

Suspend the separator as shown in Fig. 1/1. Never attach rope to eye bolt on motor. To prevent rope from slipping, wind it around the crane hook. When lowering the separator, make sure it touches down gently.

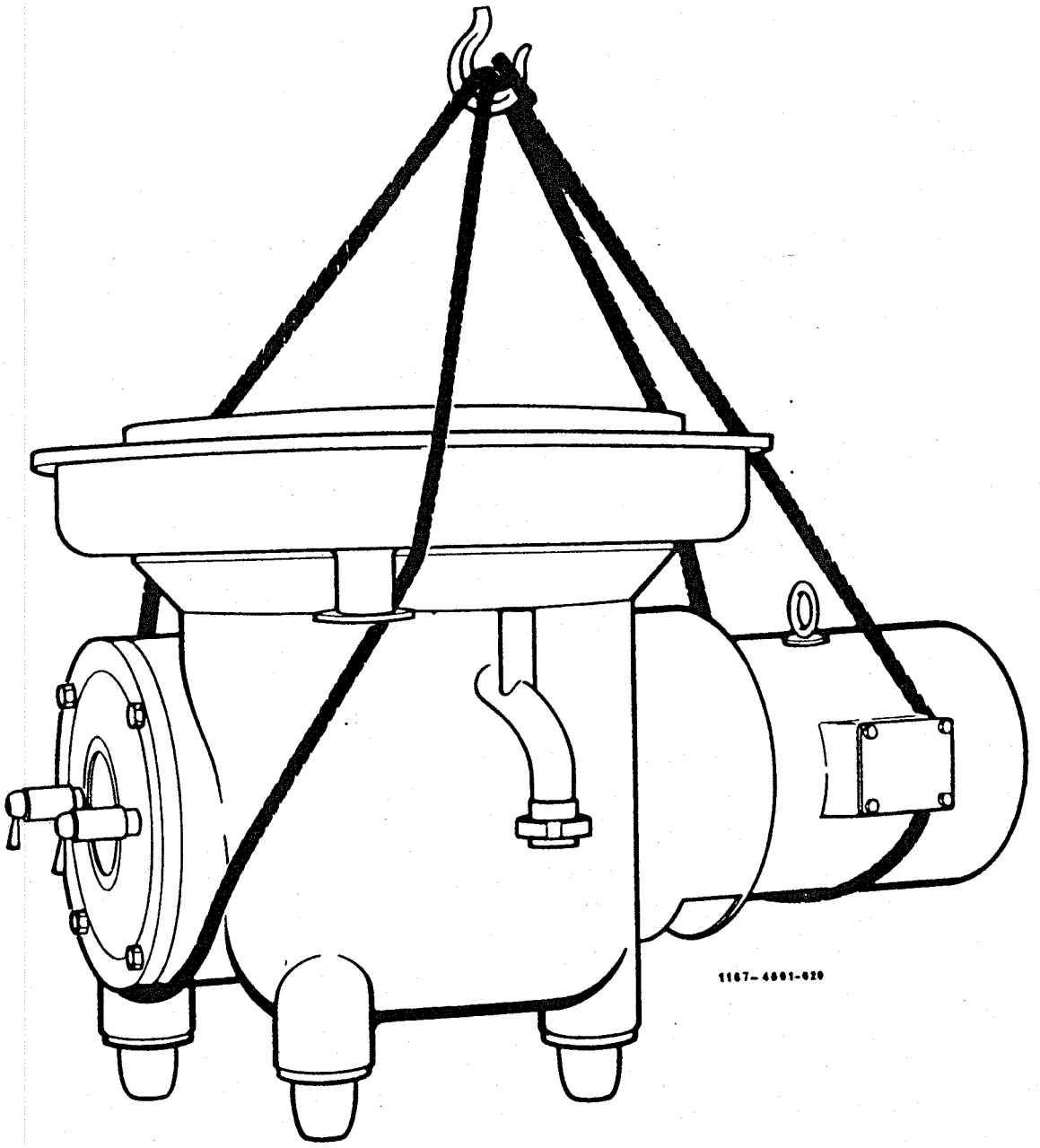

Fig. 1/1

Weight: 1,000 kg

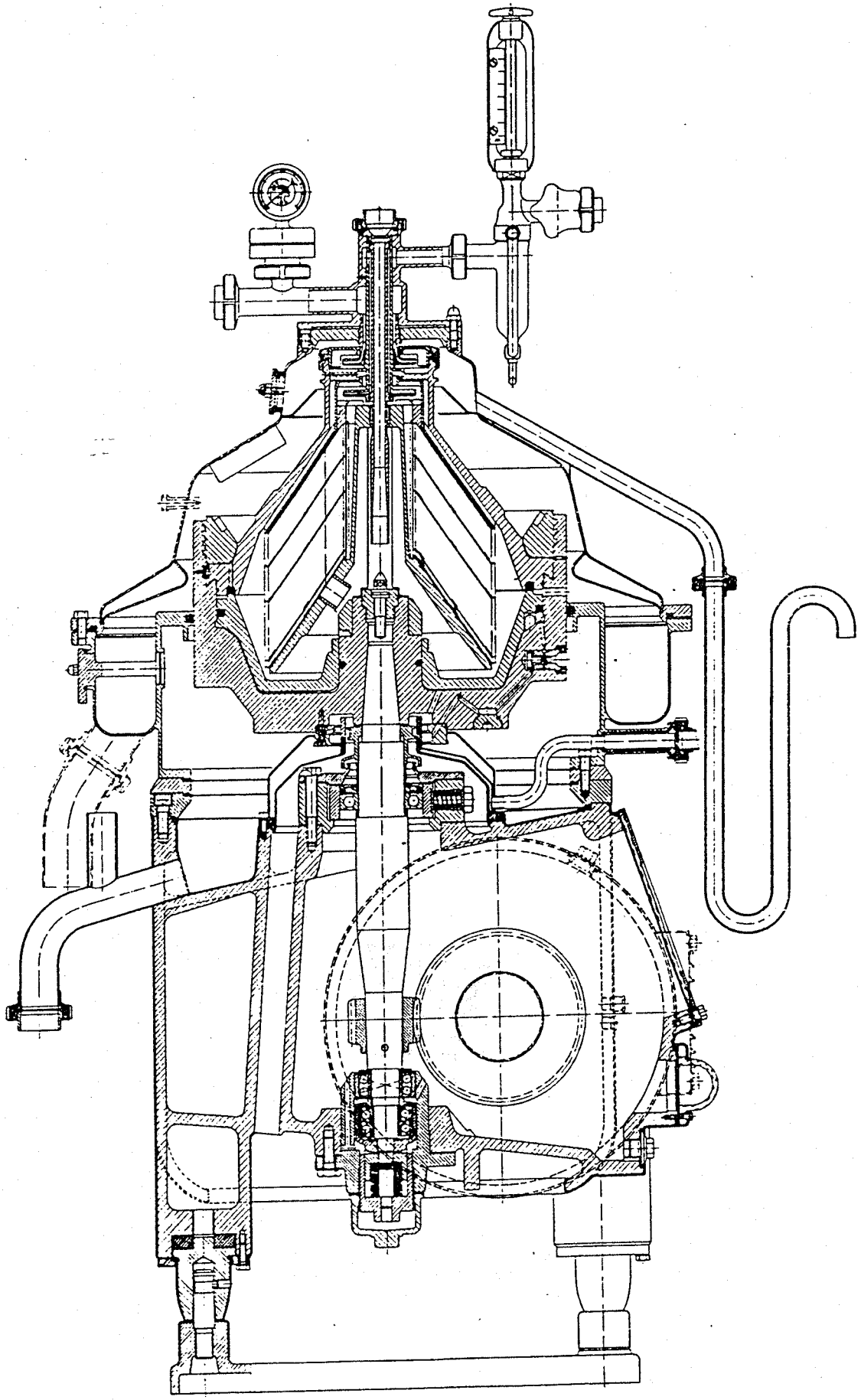

Dimensioned Drawing (for installation plan of flow constrictor refer to page 23/1)

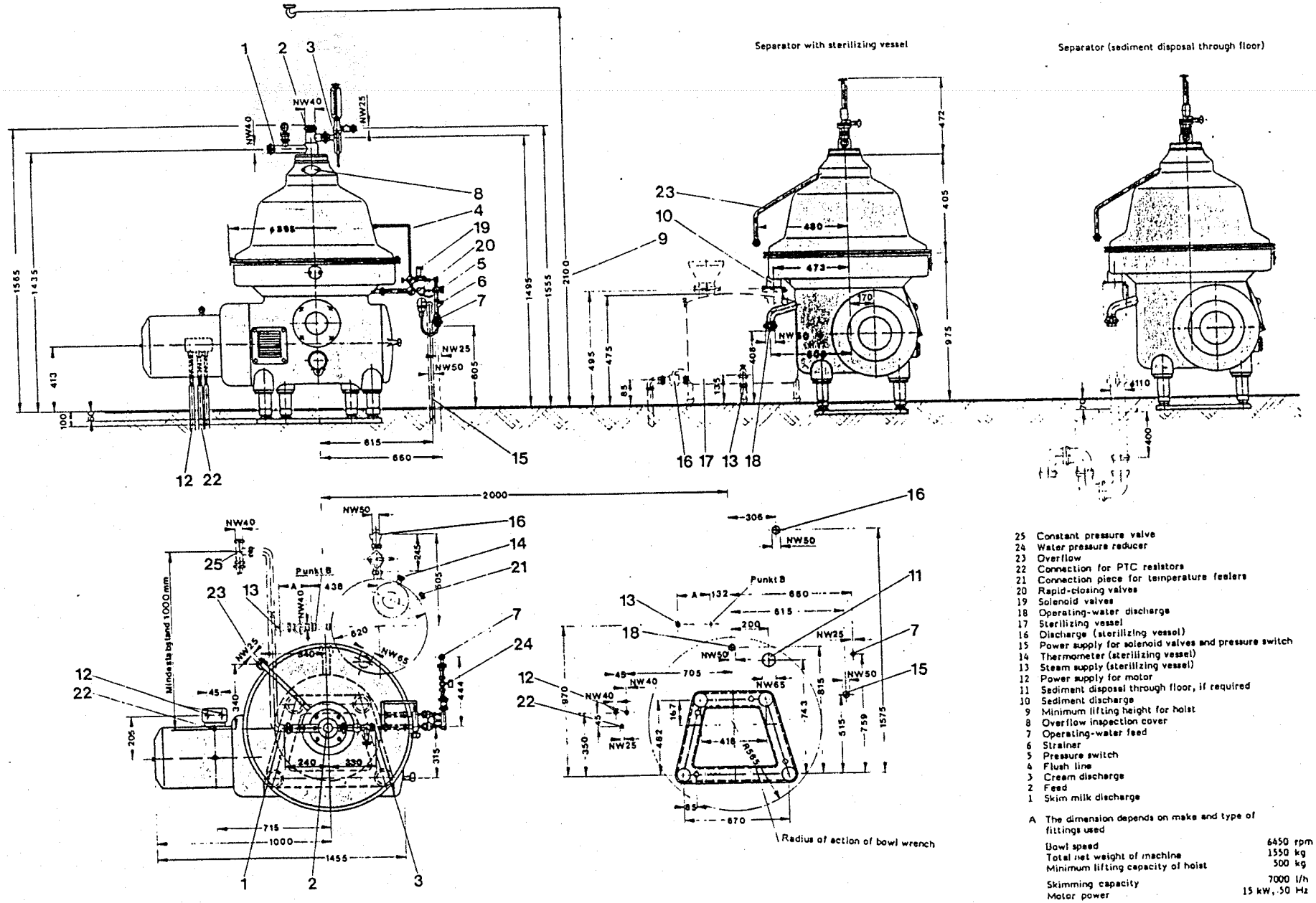

25 Constant pressure valve
24 Water pressure reducer
23 Overflow
22 Connection for PTC resistors
21 Connection piece for temperature feelers
20 Rapid-closing valves
19 Solenoid valves
18 Operating-water discharge
17 Sterilizing vessel
16 Discharge (sterilizing vessel)
15 Power supply for solenoid valves and pressure switch
14 Thermometer (sterilizing vessel)
13 Steam supply (sterilizing vessel)
12 Power supply for motor
11 Sediment disposal through floor, if required
10 Sediment discharge
9 Minimum lifting height for hoist
8 Overflow inspection cover
7 Operating-water feed
6 Strainer
5 Pressure switch
4 Flush line
3 Cream discharge
2 Feed
1 Skim milk discharge

A The dimension depends on make and type of fittings used

Bowl speed	6450 rpm
Total net weight of machine	1550 kg
Minimum lifting capacity of hoist	500 kg
Skimming capacity	7000 l/h
Motor power	15 kW, 50 Hz

1.2 Installation of the separator

When installing the separator, make sure that sufficient room is available (at least 300 mm) to mount and to remove the motor and to remove the horizontal drive shaft which is to be pulled out towards the brake side of the frame.

When installing several separators side by side be sure to keep a center-to-center distance of 2,0 m.

Do **not** install a shut-off valve in the frame drain and do **not** connect this frame drain to a piping system. The operating water must be able to discharge freely into a sewer or sludge tank, e. g. via a funnel. Otherwise it will rise into the upper section of the frame, resulting in slowing down of the bowl. It can also seep down through the neck bearing into the gear chamber and damage the gear.

The supply line to the operating-water connection should have a 25 mm I.D. The operating-water pressure should be at least 1.5 bar. Pressure fluctuations must not exceed 0.5 bar. Operating water consumption 50 l/h (see also sect. 5.3).

For mounting and removing the bowl a 500 kg hoist is required. On request a swivel hoist can be supplied.

If possible use flexible tubes for connecting the feed and discharge lines of the separator to the permanent pipe lines so that vibrations occurring during start-up and slowing-down of the machine will be absorbed.

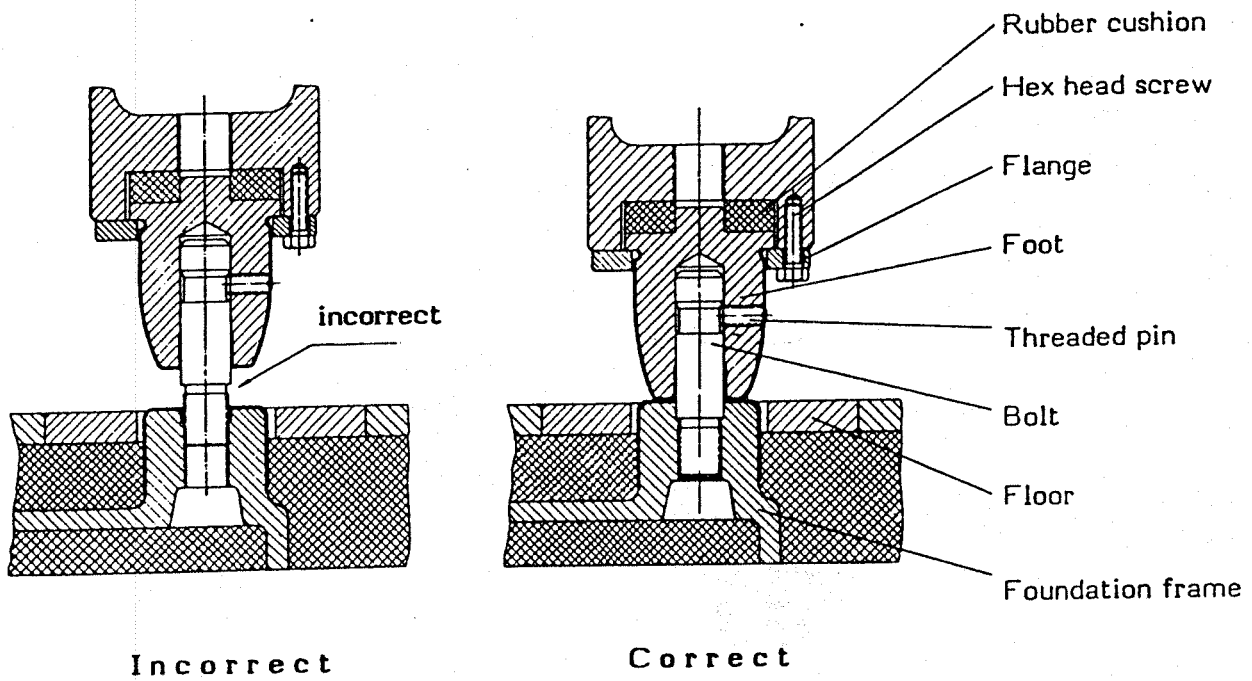

Fig. 1/2

Screw bolts into the four mounting blocks of foundation frame; **make sure they are tight.** Embed the foundation frame in the floor so that the mounting blocks of the frame protrude from the floor by about 5 mm = 0.2". Make sure that the mounting blocks are **absolutely level.** The foundation frame must be firmly anchored with anchor bolts and with poured concrete. Do **not** tighten nuts of anchor bolts before concrete has set.

By means of flanges and screws, fasten feet with fitted-on rubber cushions to separator frame. Then lift the separator onto the bolts of the foundation frame. Tighten threaded pins with a wrench.

2.2 Lubrication of threads and contact surfaces on bowl parts

Before assembling the bowl apply a thin film of one of the lubricants specified below to threads and contact surfaces of bowl bottom, bowl top, lock rings, etc.

For separators operating in the food processing industry we recommend you to use the following lubricants:

Molykote D	(white paste; apply sparingly),
Molykote DX	(white paste; may be used in excess),
Klüber Grease KSB 8	(may be used in excess).

For separators operating in the chemical industry we suggest to use molybdenum disulfide pastes, e. g.

Molykote G or Molykote G Rapid.

Besides the above mentioned lubricants, other pastes or greases with the same properties may also be used.

2.3 Lubrication of the motor bearings

For lubrication of the motor bearings, refer to the instructions of the motor manufacturer (see motor plate).

2.1 Lubrication of bearings and gear parts

All bearings and gear parts are splash lubricated from a central oil bath.

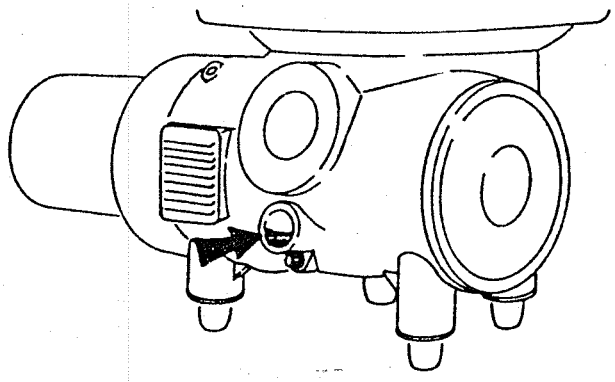

Fig. 2/1

Oil level

Before initial start-up of separator, fill gear chamber with oil. To do this, remove gear sight glass and fill in oil until oil level is slightly above middle of oil level sight glass. About 5.5 litres of oil are required for one filling. During operation oil level must never be allowed to sink below middle of oil level sight glass; refill oil when necessary.

Oil check

Check oil level once a week.
Check from time to time if oil contains water. To do this, loosen oil drain screw and allow a small amount of oil to drain. If the oil shows a milky colouring (emulsification) an immediate oil change becomes necessary.

Oil change

Make first oil change after about 250 operating hours; then change oil every 750 operating hours. However be sure not to wait longer than 6 months to change the oil.

Each time when carrying out oil change, thoroughly clean gear chamber and flush with thin-bodied oil, prior to filling in new oil. Remove all metal particles from inner walls and corners of the gear chamber. Do **not** use fluffy cleaning rags or cotton waste. The sight glass should also be cleaned, as a layer of oil will probably have deposited on the inner side of the glass and this is easily mistaken for the oil level.

Lubricating oil

As lubricating oil use only a gear oil designated

CLP 220 (according to DIN 51502)

or designated CC 220 (according to ISO/DIS 3498).

The lubricating oil shall meet the following requirements:

1) Viscosity: 220 $\pm$ 22 mm^2/s (cSt) at 40 ^oC
2) Additives:
   a) additives giving increased protection against corrosion and increased resistance to aging, - with properties preventing corrosion on steel according to DIN 51355/B, degree of corrosion 0. Corrosive effect on copper according to DIN 51759/100 A3, degree of corrosion 1.
   b) additives for decreasing wear and increasing the load-carrying capacity. The "FZG" gear rig test according to DIN 51354 as well as the test according to A 16.6/90, load grade > 12, must have been passed.
3) Demulsifying behaviour according to DIN 51599: < 60 minutes.

The gear oil designated "Separator lubricating oil CLP 220" which has been extensively investigated by us meets the above requirements and should preferably be used. For the order number refer to page 20/1 of the parts list.

IMPORTANT! Do **not** use motor vehicle lubricating oils, since they are likely to emit disturbing odours.

01761 453977. – Richard.

3.1 Three-phase AC motor 15 kW

The separator is driven by a flange type motor via a fluid clutch. The motor is started by means of an automatic star-delta switch. Switching over from star to delta connection takes place after approx. 4 seconds.

Motor protection is ensured by PTC resistor type temperature feelers incorporated in the winding of the motor. These temperature feelers have to be connected to an appropriate tripping device.

External voltage higher than 2.5 volts must not be applied to the terminals of the temperature feelers.
When testing for continuity, do not use a test lamp but only an ohmmeter.

The measuring circuit line (between tripping device and motor) has to be laid separate from other lines.

Dimensioning of switches, wiring and fuses must **not** be based on the rated current, but on the starting current which reaches approx. 1.8 - 2 times the value of the rated current.

3.2 Direction of rotation of the bowl

IMPORTANT: **The bowl must rotate in clockwise direction when looked at from above.**

The direction of rotation of the bowl is shown on the inspection cover of the hood.
If it turns in anti-clockwise direction (incorrect), two lead-in wires have to be interchanged.

3.3 Speed and starting time of the bowl

The bowl speed is 6450 rpm. It is indicated by the RPM meter (see 3.4).

Starting of the bowl takes about 7 minutes.

More than two successive starts are not permitted. If, in exceptional cases, a third start becomes necessary, it must not be effected before 45 to 60 minutes have elapsed. Otherwise the temperature of the oil in the fluid clutch will rise excessively.

3.4 RPM Meter

The RPM meter monitors the bowl speed. It consists of a proximity switch, a measuring instrument, and an indicating instrument with a limit value relay.

If the bowl speed drops below 6350 rpm because the clutch is defective or the bowl has opened irregularly, an acoustical alarm will be given. The separating process must then be interrupted manually by the service personnel and the separator must be stopped.

If the bowl fails to reach the operating speed of 6450 rpm within the pre-set starting time of 8 minutes, the RPM meter will trigger an acoustical signal and prevent starting of the milk pump.

Important Hints

The forces resulting from the high speed rotation of the bowl are likely to endanger the operating safety of the separator if the bowl has been improperly assembled or cleaned. When assembling the bowl, strictly adhere to the instructions given in this manual.
In addition, the following should be considered:

- Prior to assembling the bowl parts, carefully clean all contact surfaces and grease them according to the instructions given under 2.2. Also, lubricate threaded areas of bowl bottom and bowl lock ring as specified under 2.2.

- When installing the bowl parts, make sure that the "O" marks of the bowl parts are in line. "O" mark alignment will ensure that the parts are properly positioned and locked in place by arresting pins and guide ribs.

- To avoid damage to guide surfaces and arresting pins when installing or removing the bowl parts, make sure the hoist is in the correct position. The hoist is to be operated at the low lifting speed. Never use force when istalling or removing the bowl parts.

- Before inserting gaskets, check them for wear. Make sure that grooves for gaskets and gaskets are clean and that gaskets are in perfect condition. Be careful not to twist the gaskets while inserting them and check to be sure that they fit properly in their grooves.

- If the plant has several separators, be careful not to interchange parts of different bowls since each bowl has been balanced with its component parts. The parts of a bowl are marked with the serial-number of the separator or with the last three digits of the serial-number.

- Place bowl parts on a rubber mat or wooden pallet, never on the stone floor.

- Handle bowl parts carefully.

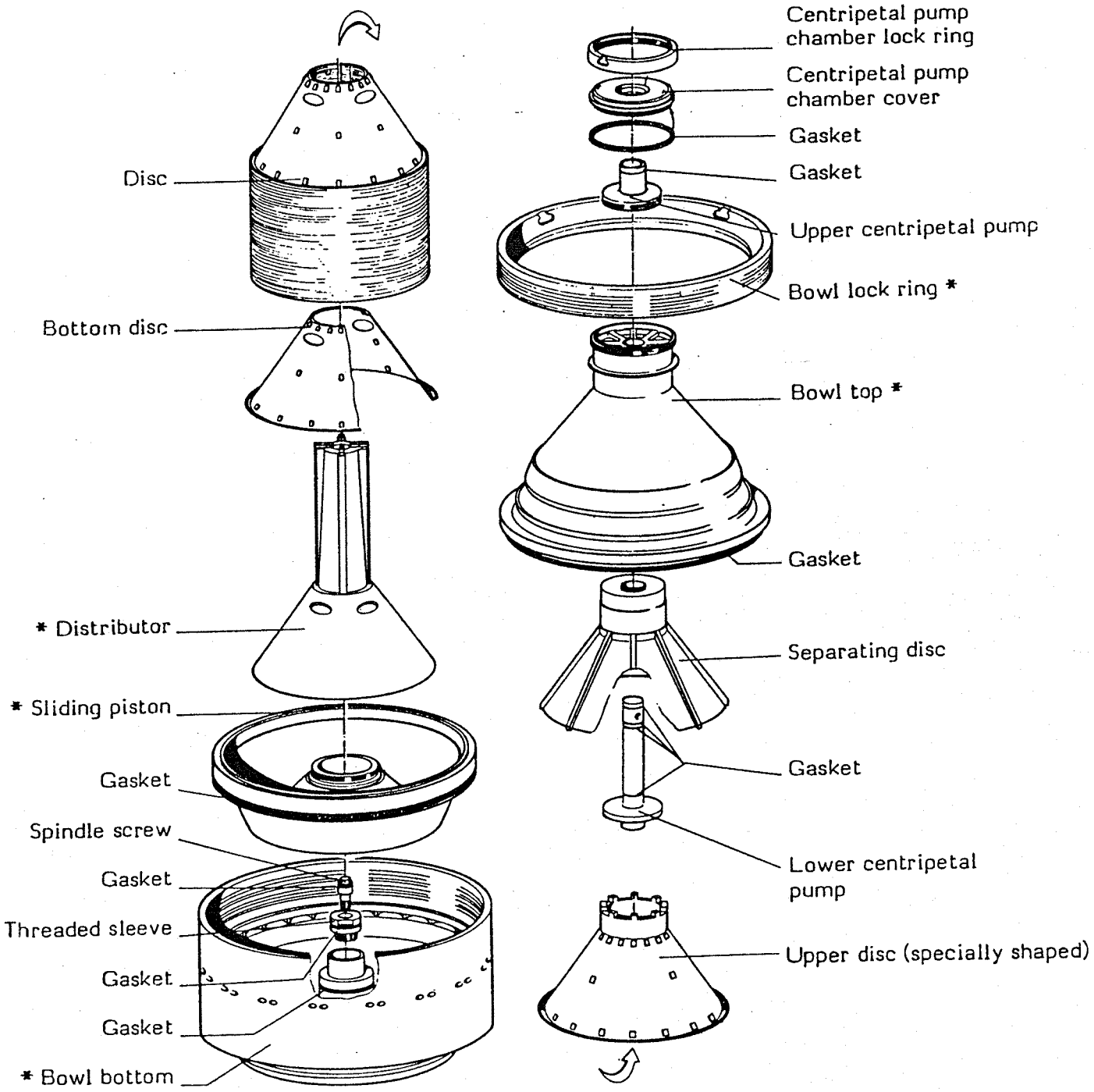

Fig. 4/2

* **IMPORTANT:** After replacing this part, the complete bowl must be re-balanced.

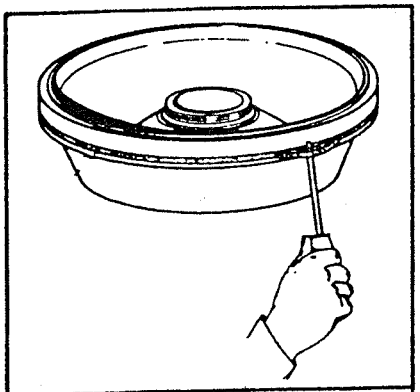

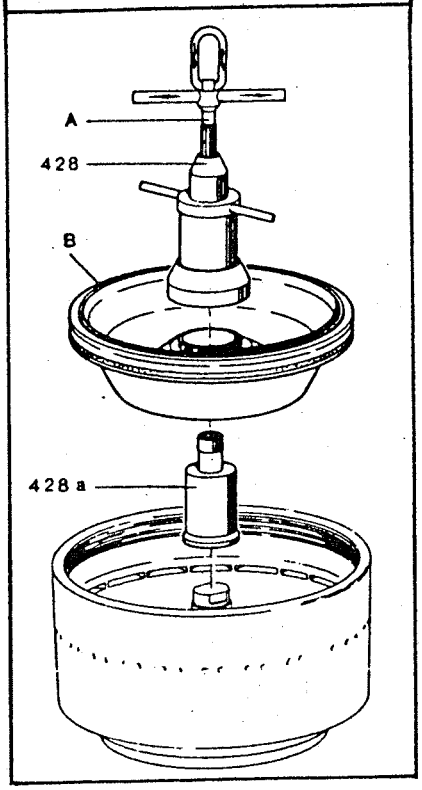

5) Thoroughly clean gasket groove in sliding piston and apply a **thin** film of grease.

If the gasket to be used is new, it must be stretched equally all the way around until its outer diameter almost corresponds to the outer diameter of the groove in the sliding piston.

Insert gasket into the groove of the sliding piston. Place a screwdriver under the gasket and lever it out of the groove. Then run the screwdriver around the sliding piston two or three times.

Tap the gasket back into the groove with a rubber hammer. The gasket is now uniformly stretched all the way around and thus ensures optimum sealing during operation.

6) Grease guide surfaces of the sliding piston and bowl bottom (see 2.2).

7) Place pressure piece 428a onto hub of bowl bottom. Make sure that arresting pins of bowl bottom fit into holes of pressure piece. Then install the sliding piston with the aid of jack 428. The "O" marks must be aligned. By turning jackscrew "A" counter-clockwise, lower the sliding piston slowly until the arresting pins of the bowl bottom catch into the holes of the sliding piston.

IMPORTANT! Be careful not to damage **sealing lip** B of the sliding piston.

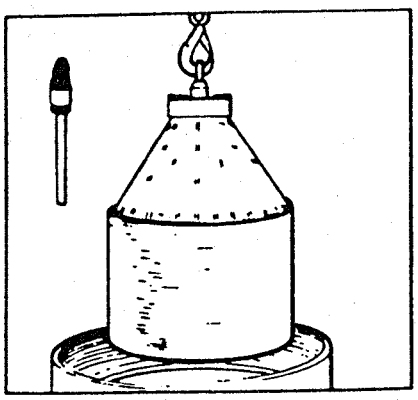

8) Stack the discs onto the neck of the distributor in numerical order, beginning with number 1.

Place the upper disc onto the neck of the distributor.

Install the distributor together with disc stack into the bowl bottom using tool 434. Make sure that the arresting pins of the bowl bottom catch into the recesses of the distributor. The "O" marks on both parts must be in line with each other.

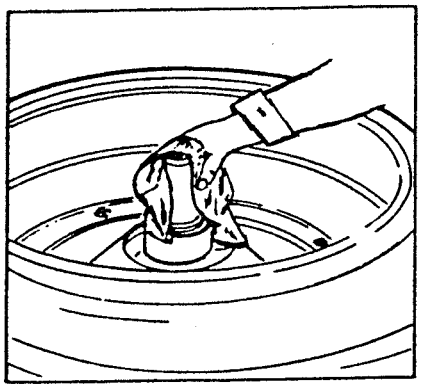

4.1 Assembling the bowl (for tools refer to page 20/2)

1) **Oil** the upper part of the spindle (thread, cone and cylindrical guide surface for the spindle cap). The spindle cap must be able to move freely up and down on the spindle. Then **clean and wipe dry the spindle with a smooth rag.** In addition, **clean the inside of the bowl hub thoroughly to ensure proper fitting.**

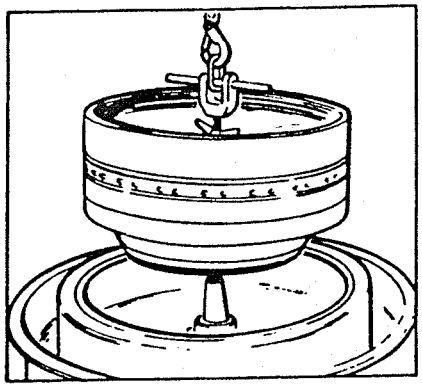

2) Place the bowl bottom onto the spindle using lifting device 436.

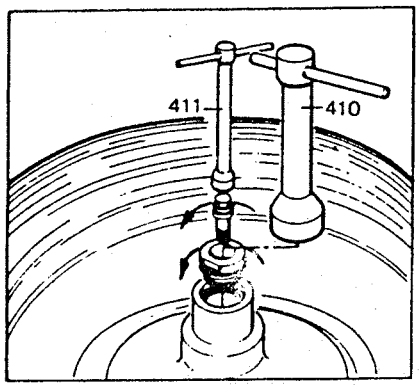

3) Screw threaded sleeve (with inserted gasket) tightly into bowl bottom, using wrench 410 **(left-hand thread).**
Then screw spindle screw (with inserted gasket) tightly into worm spindle, using wrench 411 **(left-hand thread).**

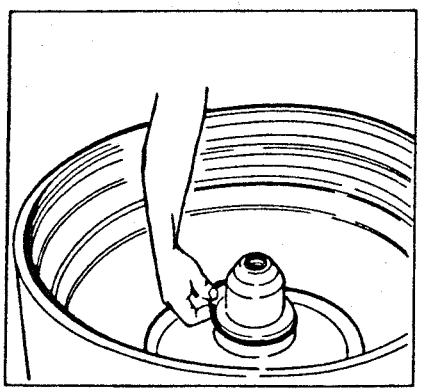

4) Insert gasket into groove of bowl bottom hub.

CAUTION: To avoid damage to the threads due to pressing, the threaded bolt must be screwed in and the threaded ring screwed on **all the way.** If the threaded ring cannot be screwed down completely, then the piston and the cylinder of the compressing device prove to be too far apart. To bring them back into their starting position, loosen screw "F" by two turns and move the pump lever to its lowest position. Now you can screw down the threaded ring, thereby bringing piston and cylinder into proper position.

e) Check to be sure that all screw connections of the compressing device are tightened securely and that return duct of check valve is closed by means of screw "F".
Before the first use of the compressing device fill oil container of pump with oil and de-aerate the hydraulic chamber (see 4.6).

f) Actuate lever of piston pump until the pressure gauge indicates a pressure of 200 - 220 bar. If the maximum pressure is not attained and oil flows out of the stroke limiting hole, then bolt 430d has not been screwed far enough into the distributor. The compressing device is only ready for use again when bolt 430d and threaded ring 430a have been brought back into the position as described under 12a-d on page 4/5.
While compressing the disc stack make sure that arresting piece of bowl bottom snaps into groove of bowl top and that bowl top does not become tilted.

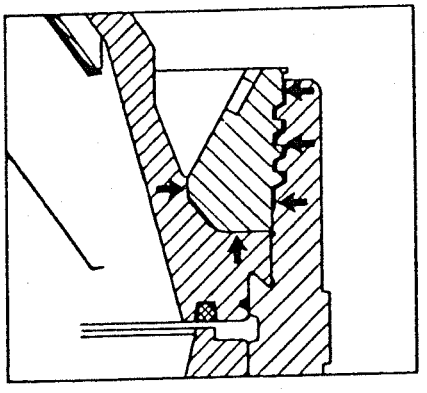

13) Check and grease threads, contact and guide surfaces (see arrows and refer to sect. 2.2).

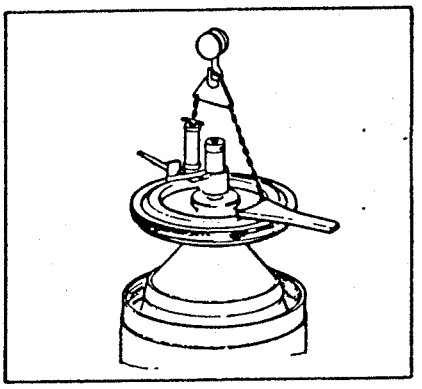

14) Use annular wrench 425 and lifting device 431 to place bowl lock ring onto bowl bottom. Screw in the lock ring **(left-hand thread)** with the aid of the annular wrench (without hitting the wrench handle with a mallet) until the "O" marks on ring and on bowl bottom are 3 to 5 cm apart.
Then hit wrench handle with mallet to obtain "O" mark alignment.

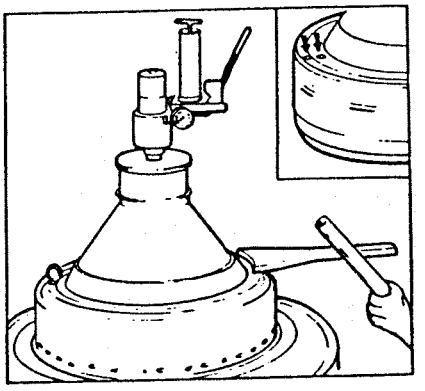

IMPORTANT: If the bowl lock ring can be tightened **by hand** with the aid of the annular wrench so that the distance between the two "O" marks is **less than 3 cm,** a spare disc has to be added because the pressure in the disc stack has slackened. If the distance between "O" marks is **more than 5 cm,** check if all bowl parts are properly locked in place. If the pressure in the disc stack is too high, it can be reduced by greasing the spacers of the discs (e. g. with cream).

15) Move pump lever down as far as it will go to prevent it from jumping back. Only then loosen screw "F" to enable the oil to return from the hydraulic cylinder into the oil container. The compressing device can now be removed from the bowl.

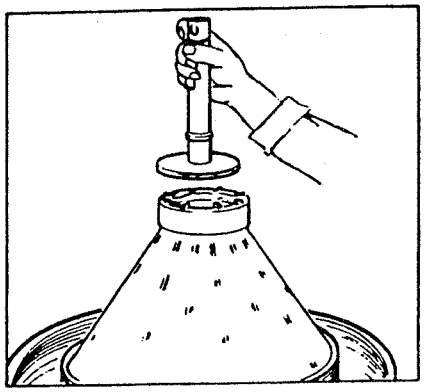

9) Place lower centripetal pump (with inserted gaskets) onto the distributor.

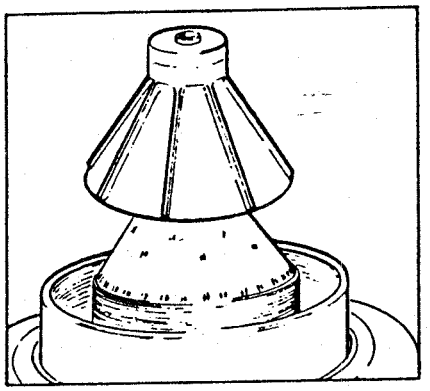

10) Mount separating disc. Make sure the "O" marks on separating disc and on bowl bottom are in line with each other.

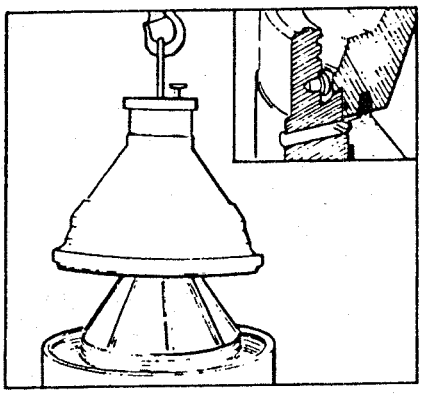

11) Clean and grease guide and cone surfaces (see 2.2). Insert gasket into the groove of the bowl top. If the main bowl gasket must be replaced, refer to sect. 4.4.

Place the bowl top onto the bowl bottom using tool 427. Make sure that the arresting piece of the bowl bottom fits into the groove of the bowl top. The "O" marks of both parts must be in line with each other.

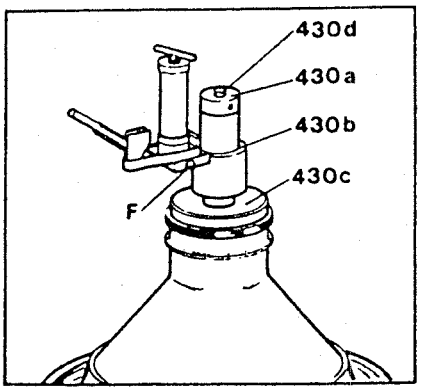

12) Before screwing in the bowl lock ring, compress the disc stack using compressing device 430 (refer also to sect. 4.6):

a) Place disc 430c onto the bowl top.

b) Screw bolt 430d as far as it will go into the distributor.

c) Insert hydraulic unit 430b into the centering recess of the disc.

d) Screw on threaded ring 430a until its upper edge is flush with end thread of bolt 430d.

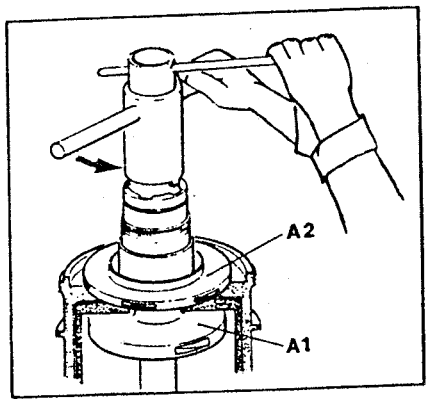

16) Screw the upper centripetal pump A2 (with inserted gasket) onto the lower centripetal pump A1 by hand **(left-hand thread).** Then tighten the upper centripetal pump as far as it will go using wrench 421. Simultaneously prevent the lower centripetal pump from turning by sticking a screwdriver through the holes of the centripetal pump shaft.

IMPORTANT! Do not use force. Do not hammer against the wrench handle.

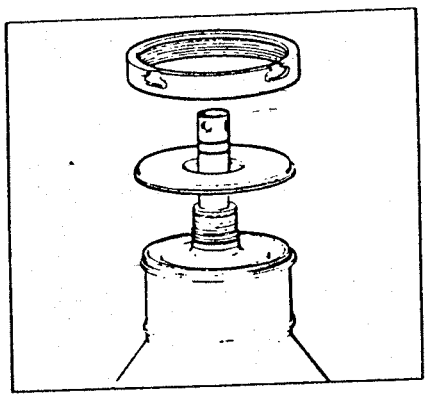

17) Mount centripetal pump chamber cover (with inserted gasket). Watch for correct positioning.

18) Screw on centripetal pump chamber lock ring by hand **(left-hand thread).**

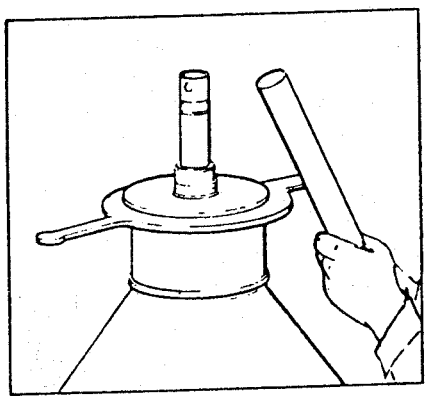

19) Tighten centripetal pump chamber lock ring by tapping the handle of the annular wrench 426 **(left-hand thread).**

20) Check to see if the bowl can be turned by hand.

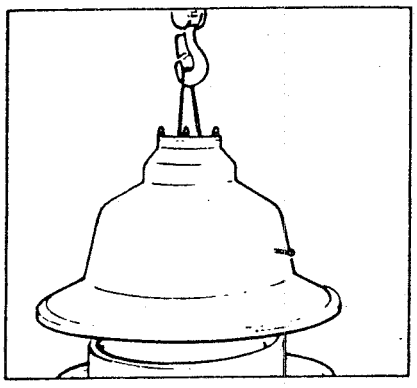

4.2 Assembling the feed and discharge connections

1) Fasten lifting device 435 onto the hood by means of cap nuts. Place the hood onto the sediment collector .

   Connect flush lines.

   Fasten hood to sediment collector by means of hex head screws.

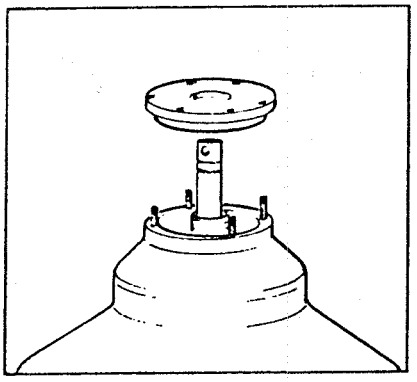

2) Place the disk onto the hood so that both Allen screws B are positioned over the respective tap holes in the hood.

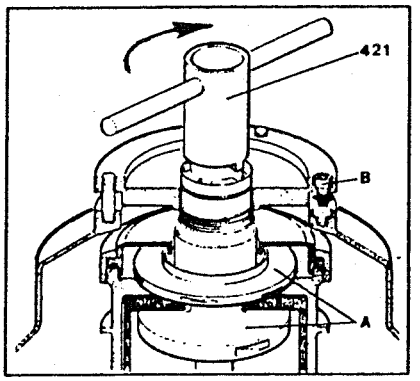

3) Screw centripetal pump A into the disk by hand in **clockwise** direction and tighten it with wrench 421 as far as it will go.

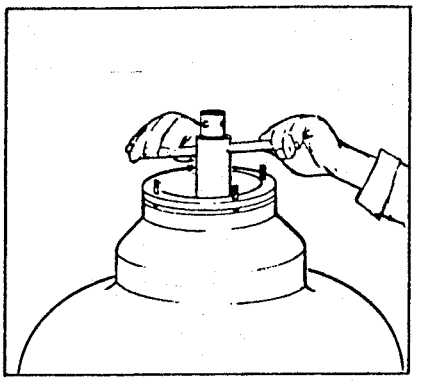

4) Before the initial start-up, after re-assembling the vertical gear parts or exchanging the bowl, check bowl for proper height (see 8.3).

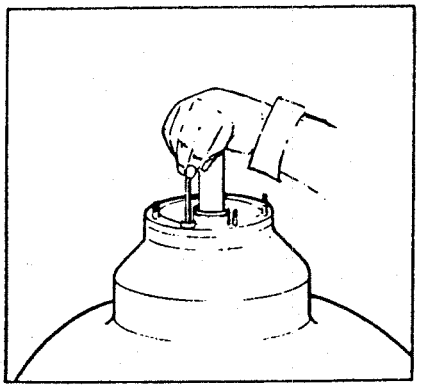

5) Screw the two Allen screws B in the disk into the hood.

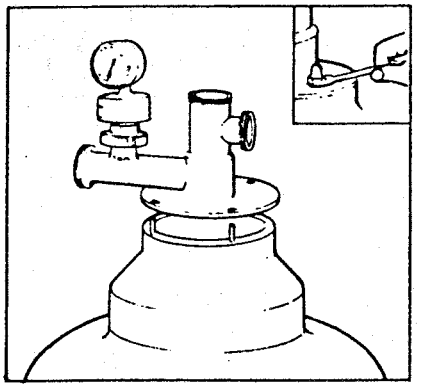

6) Install feed and discharge housing and fasten with cap nuts.

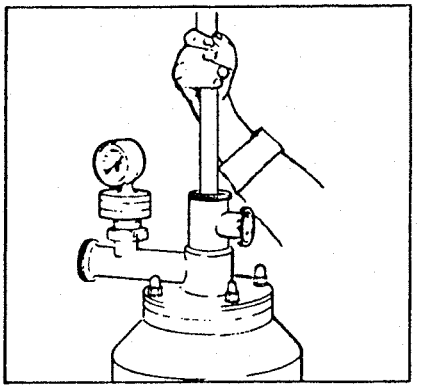

7) Install feed tube with inserted gaskets into feed and discharge housing until it hits stop.

8) Connect feed and discharge lines.

4.3 Removing the feed and discharge connections - Dismantling the bowl (for tools refer to page 20/2)

IMPORTANT! In order to avoid accidents, do not loosen any part before the bowl has stopped moving!

Note that the bowl has not stopped moving until the gear sight glass is clear and the worm wheel has ceased rotating.

Proceed in reverse order of assembly (see 4.1 and 4.2). The following should be borne in mind:

Handle bowl parts with care. Replace worn gaskets immediately.

Before opening the bowl, release the brakes by turning the two handles clockwise.

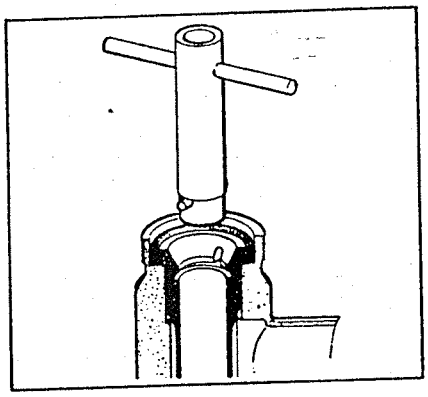

Remove the feed tube from the feed and discharge housing using wrench 429.

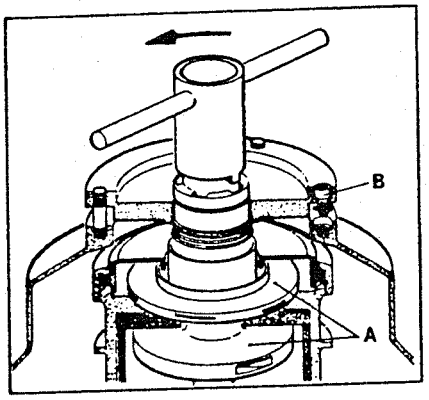

After removing the feed and discharge housing, loosen both Allen screws B in the disk. Then remove the double centripetal pump A by turning wrench 421 in **anti-clockwise** direction.
Lift off hood.

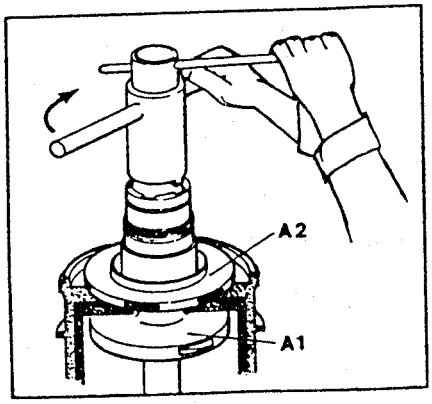

After unscrewing the small lock ring and removing the centripetal pump chamber cover, screw upper centripetal pump A2 off lower centripetal pump A1 using wrench 421 **(left-hand thread).** Simultaneously prevent the lower centripetal pump from turning by inserting a screwdriver through the holes in the centripetal pump shaft.

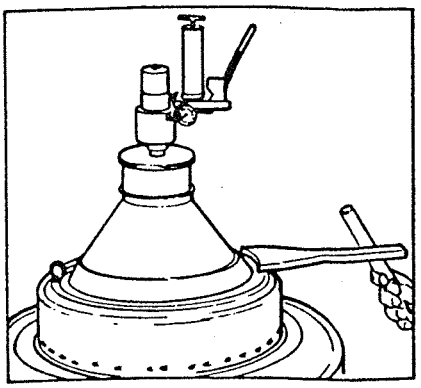

Then compress disc stack by means of the hydraulic compressing device, in order to facilitate loosening of the bowl lock ring (see 4.1, nos. 12a-f).

The bowl lock ring can now be removed easily by tapping the handle of the annular wrench 425 with mallet 405 **(left-hand thread).**
Remove hydraulic compressing device as described in sect. 4.1, no. 15.

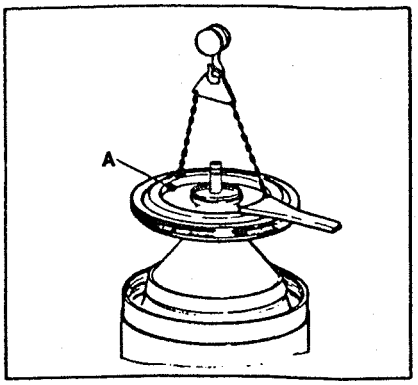

Lock annular wrench 425 by screwing hex head screw A into the groove of the bowl lock ring. Then lift off annular wrench and bowl lock ring with the aid of tool 431.

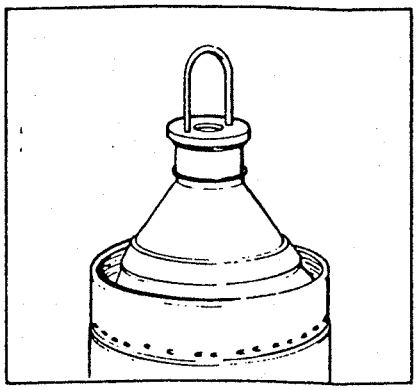

Lift bowl top from bowl bottom using tool 427.

If the separating disc is stuck to the bowl top, rap the bowl top with a copper or light metal hammer until the separating disc becomes loose. Do not let it drop onto the floor!

If the separating disc cannot be removed in this way, set down the bowl top. Pass a brass mandrel through the **outer** holes in the upper part of the bowl top and loosen the disc by gently tapping against the mandrel. Never place a mandrel on the inner rim of the separating disc.

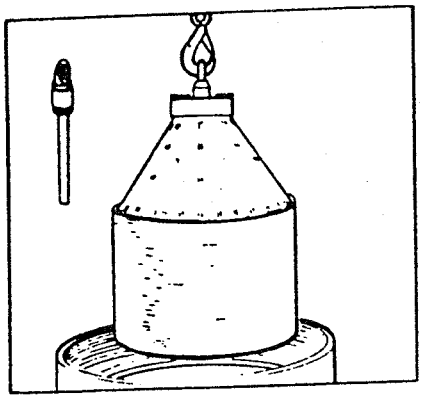

Lift out distributor together with disc stack by means of the lifting device 434.

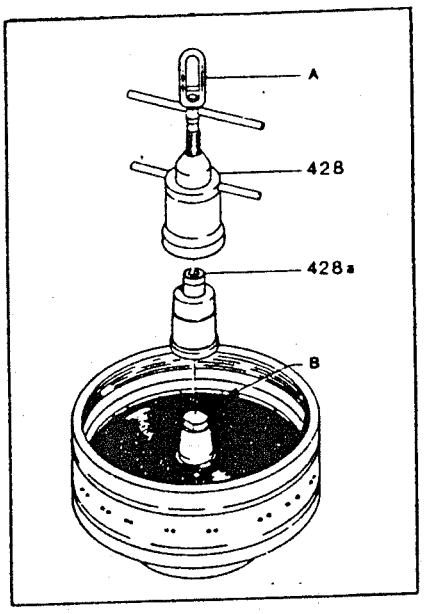

Place pressure piece 428a on bowl bottom in such a manner that arresting pins of bowl bottom catch into holes of pressure piece. Screw jack 428 onto sliding piston. Turn jackscrew A in clockwise direction in order to pull the sliding piston off the bowl bottom.
Then lift out the sliding piston.

IMPORTANT! Make sure that sealing lip B of the sliding piston does not get damaged!

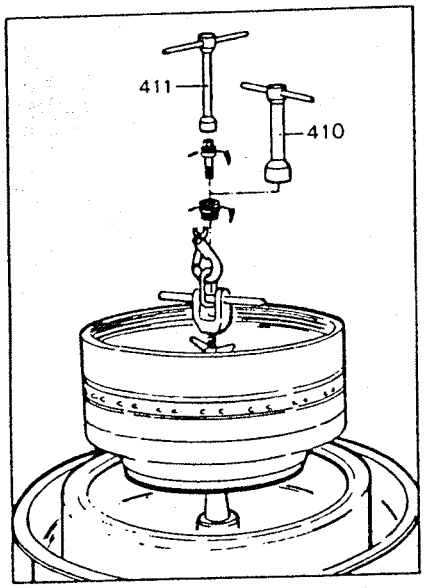

Unscrew spindle screw, using wrench 411 **(left-hand thread).**

Unscrew threaded sleeve from the bowl bottom, using wrench 410 **(left-hand thread).**

Remove bowl bottom from cone of the worm spindle with the aid of jack 436.

4.4 Removal and installation of the polyamid main bowl gasket

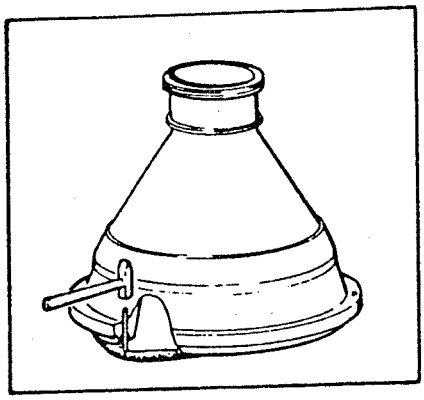

Removal

Drive out gasket from groove of bowl top with the aid of drift pin 432 which is supplied with the machine. To do this, insert the drift pin into the holes around the bowl top alternately and hammer onto the pin until the gasket becomes loose.

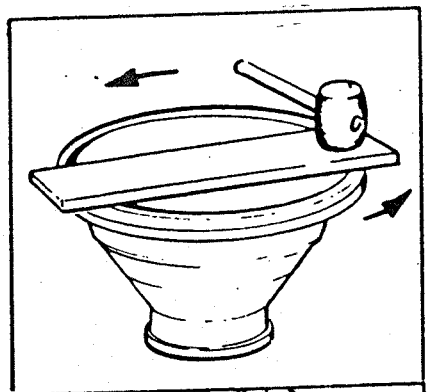

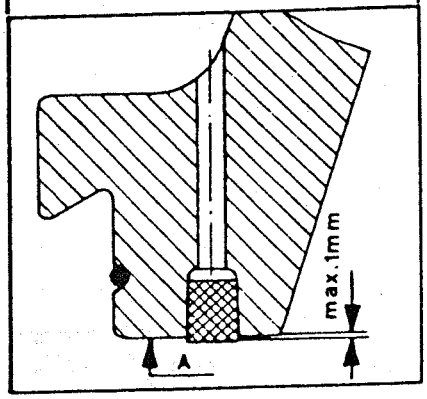

Installation

Insert gasket (with its narrow side facing the bowl top) into the clean groove of the bowl top. Using a **smooth** piece of hard wood, hammer the gasket evenly into the groove until its sealing surface protrudes from surface A by not more than 1 mm.

IMPORTANT! It is possible that a new gasket will be too small.

If the gasket is too small, soak it for about 5 min. in a water bath at a temperature of 70 - 80 ^{o}C (160 - 175 ^{o}F).

The gasket will return to its original size.

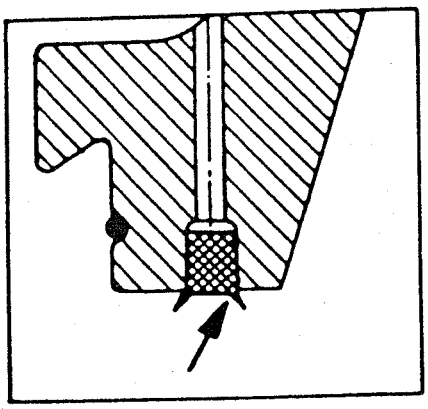

After using for the first time and after the main bowl gasket has been replaced, excess material must be trimmed off with a knife after 4 weeks operation. Excess material can cause extensive damage to the gasket, leading to bowl leakage.

4.5 Removing the piston valve

Remove the piston valve assembly 3a-f **once a month** for cleaning. At the same time, check the gaskets and replace them if necessary.

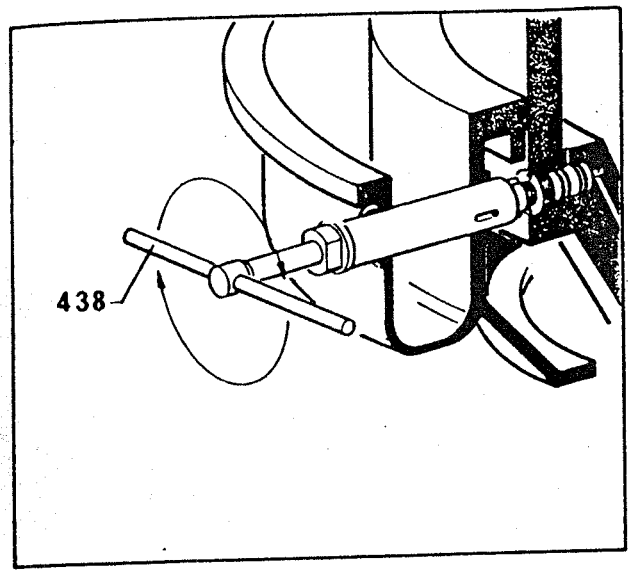

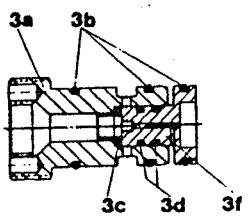

Piston valve

Screw wrench 438 into the piston valve.

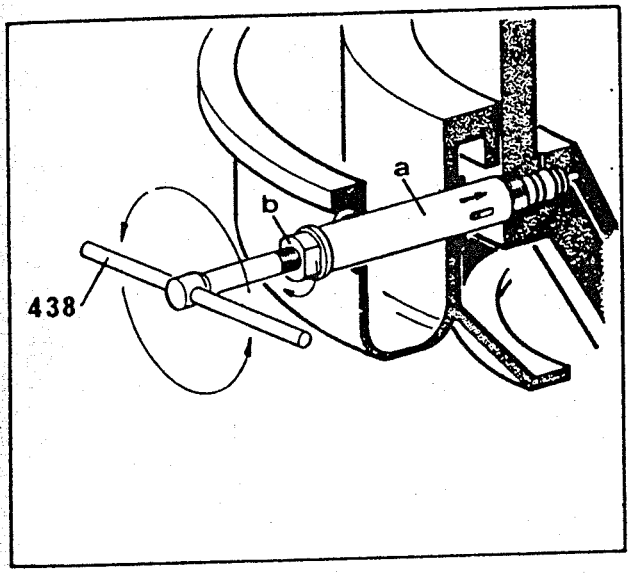

Introduce pins of bush **a** of wrench 438 into boreholes of the piston valve.
Tighten nut **b**. Then unscrew piston valve from bowl bottom using wrench 438.

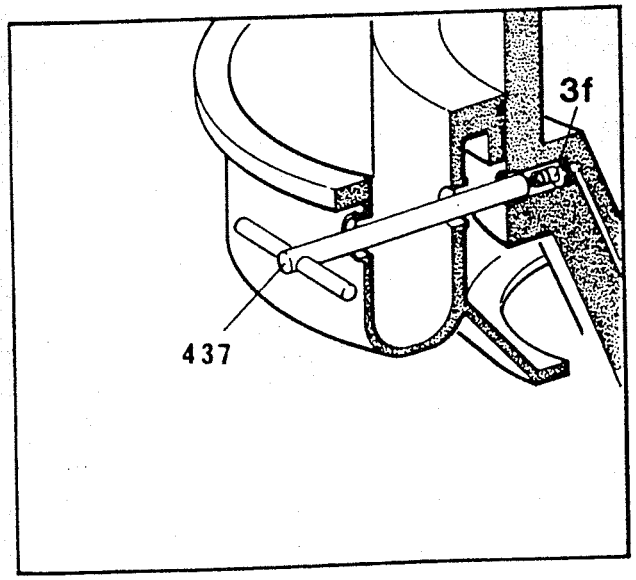

If the valve piston 3f should become stuck in the bowl bottom when removing the valve, screw wrench 437 into the valve piston and remove the valve piston together with the wrench from the bowl bottom.

Before re-installing the valve, moisten gaskets 3b and grease the thread. Then screw in the valve as far as it will go. However, do **not** screw it in **too tightly.**

IMPORTANT! If the piston valve is fitted correctly, the front face of the valve housing must be flush with the outer wall of the bowl bottom.

4.6 Hydraulic Disc Stack Compressing Device

4.6.1 Operating principle

By means of oil pump A oil is pumped under high pressure into hydraulic chamber B. Due to the increased pressure in this chamber, piston D is moved downwards. Cylinder C is held by threaded ring 430a, screwed onto bolt 430d. The lower end of the bolt is screwed into the distributor.
When the piston moves downwards, pressure is exerted on the bowl top, via disc 430c, resulting in compression of the disc stack.

4.6.2 Oil pump

Oil pump A is capable of producing a maximum pressure of 400 bar. It consists of oil container A2, pump head A1 and check valve A4. The holding capacity of the oil container is 350 cm^3.
Filling in oil: Before the first use of the compressing device, unscrew cover A3 and fill the container with oil. Then replace the cover and screw it on tightly.
De-aerate the pressure chamber B. To do this, loosen vent screw E and actuate the pump until oil escapes through the vent hole. Then re-tighten the vent screw.

4.6.3 Hydraulic fluid

As hydraulic fluid, the lubricating oil furnished with the separator and designated CLP 220 can be used.

4.6.4 Pressure gauge

The hydraulic pressure exerted upon the disc stack is indicated by pressure gauge G (indicating range 0 - 600 bar) attached to check valve A4.
The pressure required to compress the disc stack ranges between 200 - 220 bar. It may be higher than 220 bar, but must **not** be lower than 200 bar.
The maximum permissible pressure is 250 bar.

4.6.5 Stroke limiting hole

To prevent damage to the compressing device in the event of incorrect mounting the hydraulic unit is provided with a stroke limiting hole H. If bolt 430d and threaded ring 430a have not been screwed down properly (see sect. 4.1, no. 12a-d) the oil hydraulic chamber B will escape through this hole.

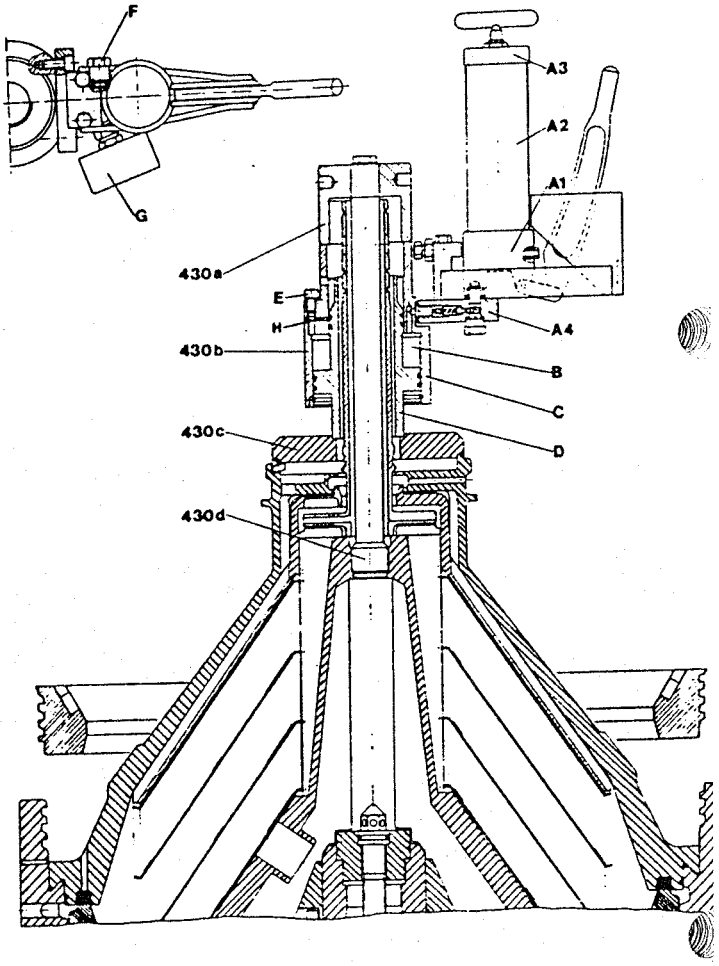

Fig. 4/15

430	Compressing device, compl.
430a	Threaded ring
430b	Hydraulic unit
430c	Disc
430d	Bolt
A	Oil pump
A1	Pump head
A2	Oil container
A3	Cover
A4	Check valve
B	Hydraulic chamber
C	Cylinder
D	Piston
E	Vent screw
F	Valve screw
G	Pressure gauge
H	Stroke limiting hole

5.1 Functioning of the hydraulic system of the bowl

The self-cleaning bowl is equipped for ejecting the solids during operation. The solids accumulate in the conical space 11 of the bowl from where they are automatically discharged through ejection ports in the bowl bottom at pre-determined intervals.

The sliding piston 4 is hydraulically actuated to open and close the bowl ports. The water pressure created in the filled sealing chamber 3 keeps the bowl closed. When water drains out of the sealing chamber after opening of the opening-water valve, the product pressure above the piston pushes the piston down and opens the bowl ports.

Sealing of the bowl:

When the bowl has reached its rated speed, the timing unit is switched on whereupon the sealing-water valve opens for 60 seconds. The sealing water flows into sealing chamber 3 underneath the sliding piston. The water pressure in the sealing chamber pushes the sliding piston upwards and presses it against gasket 9, thus sealing the bowl.

The sealing chamber is sealed off by valve piston 7 which is pressed through centrifugal force against gasket 8 and thus seals water discharge channel 10.

To make up for sealing-water losses, sealing water is supplied every 60 seconds for a period of 1 second, controlled by an electronic impulse relay.

Opening of the bowl (sediment ejection):

When opening-water valve is opened for sediment ejection, water flows through channel 5 to valve 6. The water pressure pushes valve piston 7 inwards thus opening channel 10. The water contained in sealing chamber 3 can then flow off (Fig. 5/1c). As the liquid level recedes, the sealing pressure acting on the underside of the piston quickly decreases. As soon as it is smaller than the opening pressure acting on the upper side of the piston, the latter is pushed downwards, thus opening the ports in the bowl bottom for solids ejection.

During partial de-sludging only part of the solids is ejected, whereas during total de-sludging the whole bowl contents is ejected instantaneously.

Re-sealing of the bowl:

After sediment ejection the opening-water valve closes and the sealing-water valve opens. Valve piston 7 re-seals discharge channel 10 and sealing chamber 3 fills up with water. The liquid pressure in the sealing chamber exceeds the product pressure in the centrifugation room. The sliding piston is pushed upwards, thus re-sealing the centrifugation room.

The sediment ejections are initiated by the automatic timing unit (see sect. 5.2).

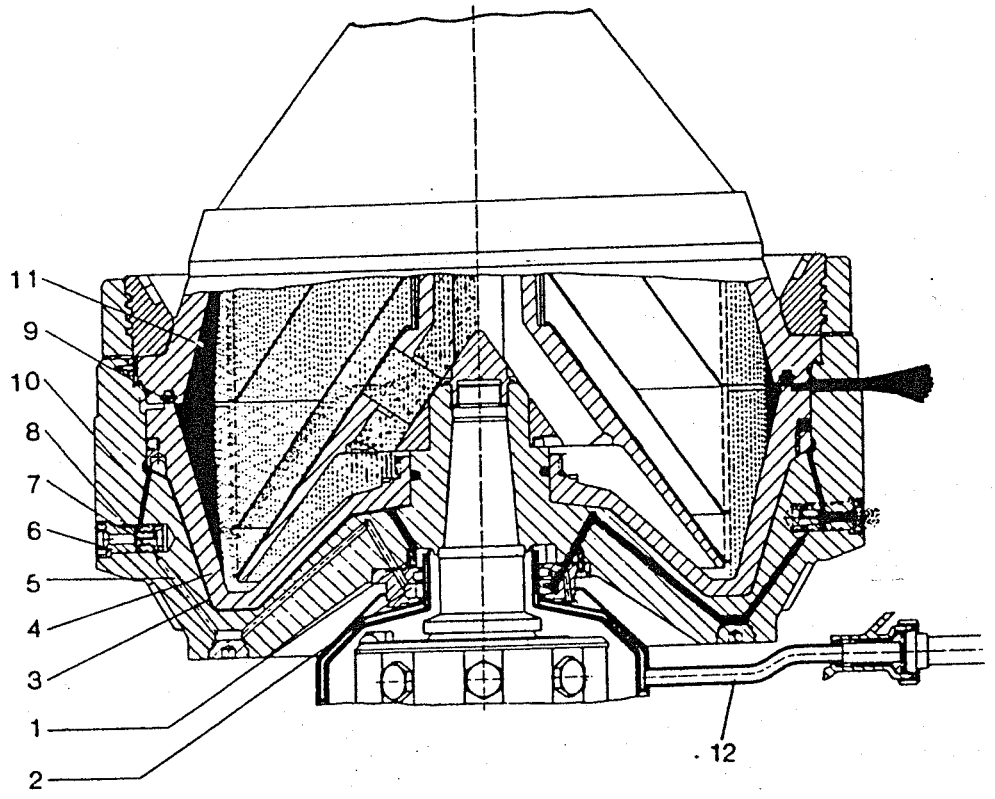

Bowl, closed **Bowl, open**

Fig. 5/1a

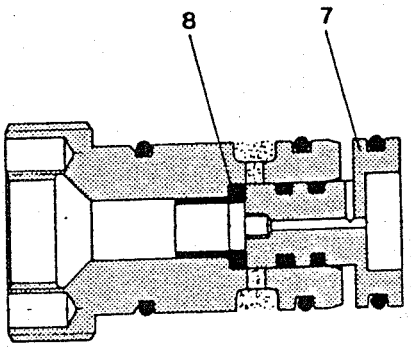

Fig. 5/1b
Functional diagram showing valve during separation

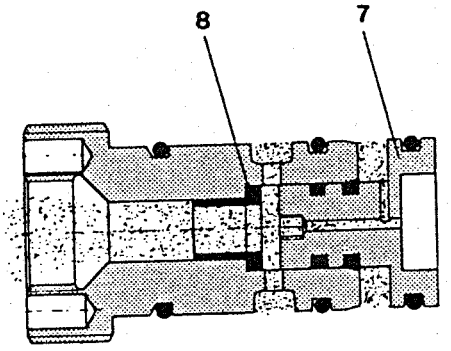

Fig. 5/1c
Functional diagram showing valve during solids ejection

1 Injection chamber for sealing water
2 Injection chamber for operating water
3 Sealing chamber
4 Sliding piston
5 Feed channel for opening water
6 Piston valve
7 Valve piston
8 Gasket
9 Bowl gasket
10 Discharge channel for sealing water
11 Sediment space
12 Operating-water feed

5.2 Timing unit

Partial sediment ejections during milk processing are initiated by the timing unit TVE 2-M in accordance with a pre-set programme. By pressing the button "Partial de-sludging", the programme in progress can be interrupted and a partial ejection can be initiated immediately.

Total ejections and hood flushings (bowl overflow) during cleaning-in-place are initiated manually on the timing unit or automatically from a separate CIP unit.

For further details refer to the instruction manual "Timing unit".

5.3 Operating-water connection

The inner diameter of the operating-water supply line should be 25 mm (1") and the pressure in the line should be at least 1.5 bar. **Important:** Pressure fluctuations must not exceed 0.5 bar. Operating-water consumption: 2,000 l/h.

The operating-water connection is provided with a water-pressure reducer K (Fig. 5/4) by means of which the line pressure is to be throttled to 1 bar. To adjust the water-pressure reducer, proceed as follows:

1) Open rapid-closing valve D (Fig. 5/4) all the way.
2) Adjust pressure with adjusting screw J so that pressure gauge on pressure reducer indicates 1 bar.
3) Close rapid-closing valve D again.

The operating water must be clean and should meet the following specifications:

Hardness:	$\leq$ 15° English hardness at separating temperatures of up to 55 °C
	$\leq$ 7.5° English hardness at separating temperatures above 55 °C
Chlorine ions:	$\leq$ 100 mg/l
pH value:	6.5 to 7.5

The strainer in filter G (Fig. 5/4) must be cleaned from time to time.

Pressure gauges M and N (Fig. 5/4) merely serve for checking the closing and opening operations.

5.3.1 Arrangement of the solenoid valves (Fig. 5/4), manual control of the separator

In addition to the automatic solenoid valves, the operating-water connection comprises two rapid-closing valves D and F connected in parallel with solenoid valves A and B, as well as two shut-off valves **a** and **b**.

This arrangement allows changing over to manual operation in the event of failure of solenoid valves A or B for opening or closing of the bowl or in the event of failure of the timing unit.

When changing over to manual operation, rapid-closing valve D is to be opened to the extent that sealing water flows out of the operating-water discharge (see no. 18 in dimensioned drawing on page 0/7) at a rate of approx. 50 l/h in order to assure continuance of the separating process.

If the solenoid valves are defective, close manually-operated valves **a** and **b**.

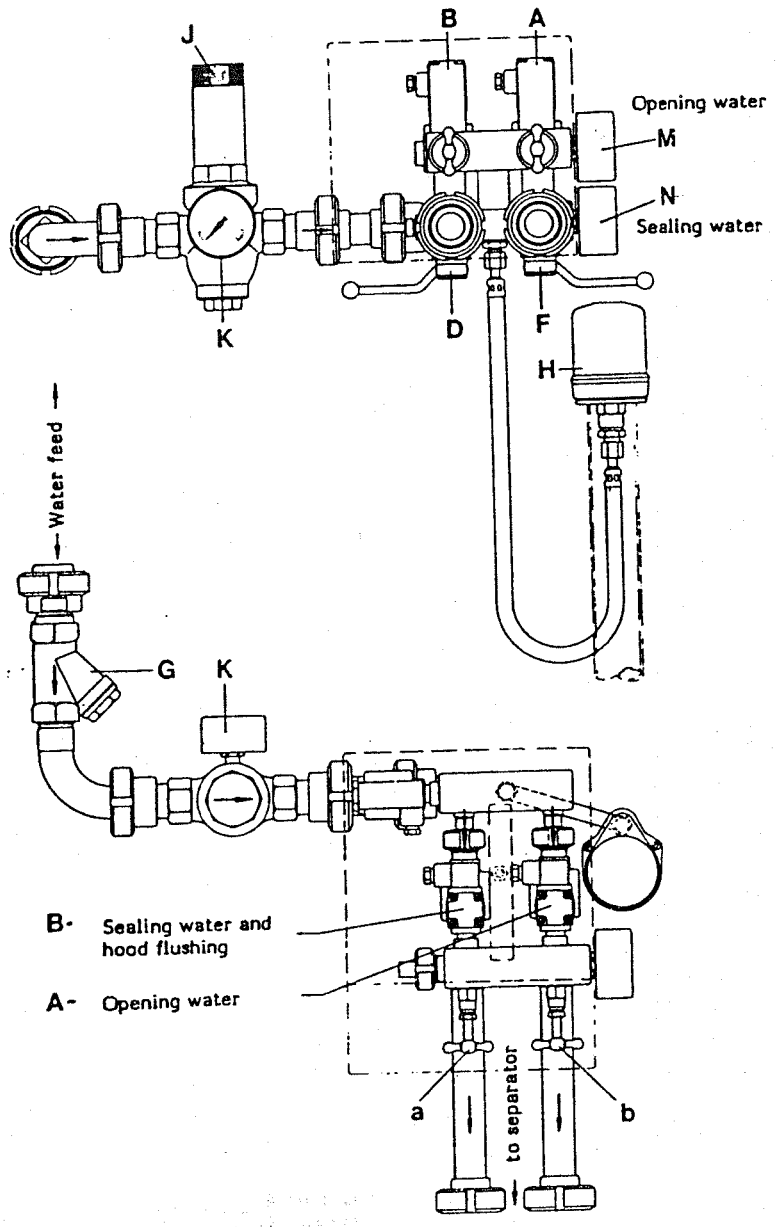

Fig. 5/4

Partial sediment ejection initiated manually

1) Open rapid-closing valve D all the way.

2) Open rapid-closing valve F in order to open the bowl. As soon as de-sludging noises can be heard, close rapid-closing valve F in order to close the bowl.

3) Throttle rapid-closing valve D so that sealing water flows out of the operating-water discharge at a rate of approx. 50 l/h.

Total sediment ejection initiated manually

1) Stop milk feed pump.

2) First open rapid-closing valve D, then open valve F.

3) When the de-sludging noises have stopped, close rapid-closing valve F and after about 5 seconds throttle rapid-closing valve D so that water will emerge from the operating-water discharge at the rate of 50 l/h.

5.3.2 Pressure switch

For proper functioning of the automatic control a pressure of at least 0.6 bar is required while closing-water valve D is open. At a lower pressure the bowl will either not open or not close.

For this reason the operating-water line is provided with pressure switch H which signals pressure drop below the minimum value by giving an audible or visible alarm.

If it is not possible to re-establish the required water pressure immediately, the switch "Separation" on the timing unit is to be opened and the milk supply is to be stopped. Partial de-sludgings will no longer take place, and pilot lamp "Separation" will go out.

5.3.3 Solenoid valves

The solenoid valves incorporated in the operating-water system are 2/2-way straight-flow diaphragm valves with internal piloting.
The solenoid coil is entirely embedded in Epoxy resin which ensures protection against moisture, good dissipation of heat, and perfect electrical insulation. The valves are fully tropicalized.

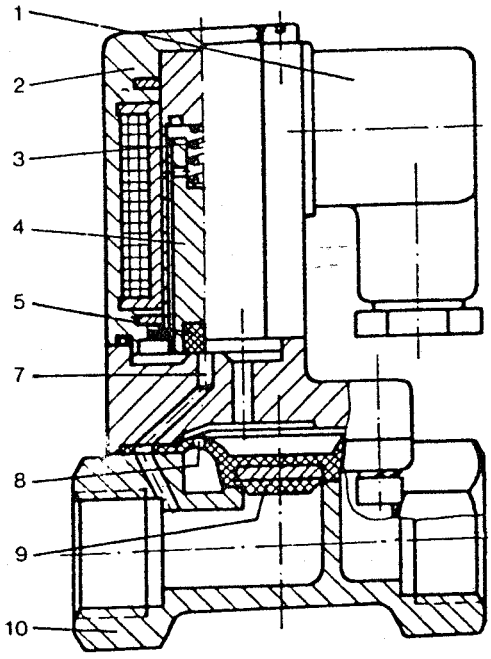

Fig. 5/5

1 Coupler socket
2 Solenoid head
3 Cylindrical pressure spring
4 Solenoid core
5 Plug (pilot valve)
7 Outlet hole
8 Inlet hole
9 Diaphragm
10 Valve housing

Operating principles

When the valve is closed (de-energized), the upper side and the underside of the diaphragm are exposed to the water line pressure, because water can flow from the valve inlet side through a small hole in the diaphragm into the chamber above the diaphragm. As the area exposed to the water line pressure on the upper side of the diaphragm is larger than the area exposed to the same pressure on the underside, the diaphram is kept pressed against the valve seating.

Upon energization of the solenoid coil, the plug which is integrally vulcanized in the solenoid core is lifted from the seating of the pilot valve thus opening a duct between the space above the diaphragm and the discharge side of the diaphragm valve. As this duct is larger in diameter than the small hole on the inlet side, the water can flow faster out of the space above the diaphragm than it flows into it. Thus the water pressure above the diaphragm drops so that the diaphragm is lifted by the pressure acting on its underside; the valve is opened.

If the energizing current is disconnected, the spring will drive the solenoid core downwards and the pilot valve will close. Consequently, the water pressure above the diaphragm builds up again so that the diaphragm is pressed against the valve seating; the valve is closed.

Maintenance

The solenoid valves do not require special maintenance. However, care should be taken that the coupler socket is always screwed tightly to the solenoid head to ensure perfect sealing action of the gasket.

Locating electric troubles

If it has been found that the control cabinet functions properly and that voltage is present at the valve terminals of the terminal strip while the corresponding time function element is operating, the trouble will have to be ascribed either to a defective solenoid coil, or to open circuit between terminal strip and valve, or to poor connection.

In the event of a defective solenoid coil, the solenoid head can be removed from the valve. To do this, remove first the coupler socket (loosen screw and pull out the socket), then loosen the fillister head screws. **Note:** Before doing so, shut off the main valve vor operating water.

Since the solenoid coil is entirely embedded in the solenoid head, the complete solenoid head (No. 0018-3710-800, see page 17/3) has to be replaced.

Technical data

Solenoid valve	Type	40 A / 121
Part - Number		0018-3711-600
Pipe connection	R	3/8"
Voltage	V	220 AC
Frequency	Hz	50/60
Optional voltages	V	24 AC, 115 AC 24 DC
Power consumption: pull-in	VA	approx. 20
(AC operation) operation	VA	approx. 16
(DC operation)	W	approx. 12
Duty cycle	%	100
Frequency of operations	/h	1,000
Type of enclosure	IP	65
Pressure range	bar	0.5 - 10
Temperature: medium	°C	+90
ambient	°C	+35
Cable entry	Pg	9

6.1 Starting the separator

1) Each time the separator is started check to be sure that:
   - the brakes are released by turning the handles clockwise,
   - the oil level in the gear chamber is slightly above the middle of the sight glass,
   - hex head screws for fastening the hood and cap nuts for fastening the feed and discharge housing are tightened securely,
   - cream valve is open,
   - main valve in the operating-water line is open,
   - time function elements on the timing unit are set as specified in the instruction manual "Timing Unit".

2) Switch on main switch of timing unit.

3) Switch on the motor. After a delay time of 10 minutes closing water is supplied automatically; the bowl closes.

4) After another two minutes start the water circulation as it is commonly practised in dairies.

5) After switching over to milk processing, operate "separation" switch on the control cabinet. Then adjust operating discharge pressure and the cream flow rate as follows:

Operating pressure and cream flow rate

Throttle constant-pressure valve on skim milk side by adjusting the operating-pressure reducing valve incorporated in the control cabinet. **At the same time** adjust cream valve to desired cream flow rate. Throttle constant-pressure valve while maintaining the desired cream flow rate until slight overflow occurs. To check the overflow, open inspection cover of hood. The pressure indicated by the pressure gauge in the skim milk line at the moment of overflow is to be considered as maximum pressure. Then adjust pressure reducing valve until a pressure of 0.3 - 0.5 bar less than the maximum pressure is obtained.

Adjustment of the constant-pressure valve to operating pressure is only necessary when using the separator for the first time.

Separation temperature

The separation temperature should be 50 - 55 °C. If the milk tends to precipitate too much albumin, the separating temp. should under no circumstances exceed 55 °C.

Partial de-sludgings

The separation programme is controlled automatically by the timing unit (see sect. 6.2).

Separation time:	1 hour when separating milk 15 - 30 minutes when separating whey
Amount of ejected solids:	3 l when separating milk 5 l when separating whey

Sterilizing tank

Approx. 20 l of liquid flow into the sterilizing tank during each partial de-sludging cycle (3 l solids and 17 l rinse water). The tank can hold the liquid from three de-sludging cycles. After the addition of 1 kg of alkaline cleaning agent, the liquid in the sterilizing tank is then steam-heated up to a temperature of 95 °C and maintained at this temperature for a period of ten minutes. It can then be discharged.

The separator in operation

For the maximum back-pressure in the process equipment connected downstream permissible for the available centripetal pumps, refer to page 18/1.

To fully utilize the discharge pressure of the cream pump, e. g. when the separator is used for milk clarification where cream and skim milk are re-combined after separation, adjust the skim milk valve to the highest possible discharge pressure.

When clarifying milk, it may happen that cream with a high butterfat content is discharged from the overflow pipe of the hood although the cream valve is open and maximum pressure is prevailing in the skim milk line. This indicates that the back-pressure is too high for the cream pumps. To overcome this difficulty, the back-pressure of the equipment downstream of the separator has to be reduced or a booster pump has to be installed.
It should be noted that cream with a very high butterfat content will cause the measuring rod in the cream flowmeter to rise due to the high viscosity of the cream, thus indicating a flow rate that is higher than the actual cream flow.

If there is overflow despite a low skim milk discharge pressure, check the gaskets in the centripetal pump chamber cover and on the pump shafts for damage.

In some cases, especially when using heaters with a low back-pressure, it is advisable to fit a throttle into the cream line upstream or downstream of the heater and to set it to about 1.5 bar in order to ensure foamfree operation of the separator.

Possible causes of inefficient separation

- Unfavourable pre-treatment of the milk (pumps, agitator, very high temperature, cold storage of raw milk over a long period).
- Variations in temperature, bowl speed, throughput capacity or skim milk pressure.
- Re-mixing of cream and skim milk after separation, e. g. caused by leaking cocks in pipe lines connected for drink milk production. Note that during milk separation the drain valve in the connection line must be open.
- Homogenized return milk or sweet cream buttermilk added to the raw milk.

Analysis of milk samples

Skim milk samples should always be taken at the screwed union of the skim milk discharge.

If the trouble cannot be found with the separator or with the equipment ahead of the separator, check condition of chemicals used to analyse the skim milk. To test this, fill water instead of skim milk into butyrometers.

6.2 De-sludging of the bowl (solids ejection)

6.2.1 Partial de-sludging

Partial sediment ejection during milk processing means partial emptying of the sediment space of the bowl. **The milk supply to the bowl is not interrupted during partial sediment ejection.**

To accomplish partial ejection, opening water is briefly fed to the bowl via solenoid valve A (Fig. 5/4). The duration of opening-water supply (= duration of partial ejection: 0.5 to 2 seconds) varies with the amount of ejected sediment and must, therefore, be determined by tests which can be carried out with water. During each partial ejection an additional amount of approx. 0.2 l/sec. of flush water flows off through the sediment discharge. This amount is to be deducted from the measured total volume.

When separating milk, adjust the duration of partial ejection so that approx. 3 litres will be ejected from the bowl.

When separating whey, adjust the duration of partial ejection so that approx. 5 litres will be ejected from the bowl.

Programme sequence, programme times

When the time adjusted at the time function element on the control cabinet has elapsed (milk separation: 1 hour, whey separation: 15 - 30 minutes) the first partial de-sludging cycle follows automatically and is repeated subsequently at regular intervals.

Time element "pre-flushing" is to be set so as to ensure opening of solenoid valve B "sealing and flush water" (Fig. 5/4) 10 seconds before each partial ejection. Water is injected into the hood to prevent the sediment from adhering to the walls of the bowl.

For solids ejection, solenoid valve A "opening water" opens for 0.5 - 2 seconds, which likewise is to be determined by adjusting the time function element "partial de-sludging" on the control cabinet.

The sealing and flush-water valve B remains open throughout the de-sludging cycle and for 60 seconds after its completion. The period of time for which this valve is to remain open after sediment ejection (at least 60 seconds) can be adjusted by means of time function element "subsequent flushing".

By operating push button "partial sediment ejection", the "separation" programme is interrupted and a partial sediment ejection is initiated immediately. When this enforced partial de-sludging cycle is finished, the "separation" programme automatically re-starts.

6.2.2 Total de-sludging

Total de-sludgings during cleaning-in-place can only be initiated manually with timing unit TVE 2-M. (For the automatic cleaning-in-place a separate CIP unit is required, see relevant brochure.)

The switch "Separation" on the control cabinet is to be kept switched on. To initiate the total ejection, push button "total de-sludging" has to be actuated.

Provided that the electrical installation has been carried out properly (see installation plan of timing unit) the feed pump(s) is (are) automatically switched off by pressing push button "total de-sludging" and re-started automatically approx. 1 minute after total ejection. Interruption of the liquid supply to the bowl by stopping the feed pump is necessary for the recovery of the bowl speed which drops slightly during total ejection.

After re-filling of the bowl (check increase of discharge pressure on separator), another total ejection can be initiated by again pressing push button "total de-sludging".

Should the feed pump(s) fail to stop automatically during total ejection, switch off pump(s) manually and re-start it (them) 1 minute after total ejection.

6.2.3 Manually controlled de-sludgings

In case of emergency (e. g. failure of the timing unit or of the solenoid valves), the bowl can also be emptied by opening and closing the by-pass valves associated to the solenoid valves (see 5.3.1).
During sediment ejection, the bowl speed will drop slightly. Bear in mind that sediment ejection is allowed to be repeated only when the bowl has re-attained its operating speed.

6.3 Stopping the separator

1) **Flushing the plant with water** (not necessary if cleaning-in-place has been carried out after milk processing).

   a) Cut off milk supply to separator (stop feed pump).

   b) Displace remaining milk out of the bowl with water.

   c) Flush the plant with water thoroughly.

   d) Initiate total de-sludging by operating push button "total de-sludging" on control cabinet.

   e) Carry out 1 - 2 flush de-sludgings to ensure that no solids remain in the bowl. Flush hood after each de-sludging by operating push button "overflow".

2) Switch off motor.

3) Apply brakes by turning both handles in anti-clockwise direction.
   IMPORTANT! Do not loosen any part before the bowl has stopped completely!
   Note that the bowl has not stopped moving until the gear sight glass is clear and the worm wheel has ceased rotating.

7.1 Cleaning-in-place

The separator is generally included in the CIP cycle of the pasteurizers. For cleaning the separator, the detergents used for cleaning the pasteurizers will be adequate. However, be sure that the last cleaning agent to be circulated is acid.

After milk processing, the residual milk is displaced and the whole equipment thoroughly flushed with water. Flushing is followed by two "total ejections" accomplished by pressing the push button "total ejection" on timing unit TVE 2-M.

The plant must be flushed with water and subsequent flush de-sludgings have to be performed even if the plant cannot be CIP-cleaned for some reason after milk processing.

The CIP-programme should comprise the following programme steps:

1) Flushing with caustic solution,
2) Flushing with water,
3) Flushing with acid solution,
4) Flushing with water.

IMPORTANT: Each of the programme steps 1 - 4 should be finished up with a total ejection.

During each programme step the spring-controlled constant-pressure valve incorporated in the skim milk line is to be throttled several times by actuating the snap closure (cover). This will cause flooding of the centripetal pump chamber of the separator, resulting in thorough flushing of hood and sediment collector.

If the separator is **not** equipped with a constant-pressure valve, the valve in the skim milk line must be throttled several times by hand.

IMPORTANT: Bear in mind that bowl parts of stainless steel will be attacked by chlorine. Therefore, make sure that detergents are free from chlorine.

7.2 Cleaning the bowl

It is not normally necessary to dismantle and clean the self-cleaning bowl upon completion of the separation process, provided that cleaning-in-place has been adequately performed while the bowl was still moving. How often it is necessary to clean the bowl by hand is dependent on the nature of the product and can only be determined by tests.

However the bowl should be dismantled once a month for the purpose of checking and manual cleaning.

Never use metal scrapers or metal brushes for cleaning the discs and bowl parts.

Remove gaskets from the bowl parts and clean grooves and gaskets to prevent corrosion. Replace damaged gaskets. Swollen gaskets should be left to dry at a warm place so that they can regain their original dimensions and can be re-used.

Carefully clean the small holes for feed and discharge of the operating water in bowl bottom as well as the piston valve to assure trouble-free performance of the solids ejection process.

Clean and wipe dry guide surfaces and threads of bowl parts and grease them (see 2.2). Spindle cone and inside of bowl hub should be oiled and then **wiped clean and dry with a smooth rag.**

Re-assemble bowl immediately after cleaning.

7.3 Cleaning the upper section of the frame

From time to time, the inside of the upper section of the frame has to be cleaned in the area below the bowl. After removing the bowl (see 4.3) place splash cover 406 over the spindle to prevent wash liquid from seeping into the drive and rendering the lubricating oil unserviceable.

Never aim a water jet directly at the separator for the purpose of cleaning. Clean it by hand with a sponge or cloth.

7.4 Cleaning the operating-water feeding system

The small holes in the operating-water feeding device should be cleaned every 3 - 6 months.

7.5 Cleaning the gear chamber

When changing oil, clean gear chamber thoroughly with kerosene. Be sure to remove all metal particles from walls and corners. Do **not** use fluffy cleaning rags or cotton waste.

7.6 Cleaning prior to a long-term shut-down of the separator

Prior to a long-term shut-down, clean the separator thoroughly (see 7.2 and 7.3). The clean bowl parts and all unvarnished machine parts should be wiped dry and greased to avoid corrosion. The clean grease-coated bowl should be kept in a dry place.

To prevent gaskets from getting brittle, keep them in a cool and dry room, protected from dust and light.

Drain the lubricating oil and fill gear chamber with corrosion-preventing oil, e. g. SHELL Ensis Oil 30. Oil level must be up to middle of sight glass. Let separator run without bowl for approx. 10 minutes to make sure that all gear parts are coated with the corrosion-preventing oil. Then drain the oil. Oil upper end of spindle by hand and protect it with splash cover 406.

Check water shut-off devices for leakage. If necessary, remove connecting piping between faulty shut-off device and separator to avoid damage which may be caused by drip water.

Stop operating-water supply at the branch point of the water mains to prevent inrush of water into the separator, caused by unintended opening of the shut-off valve.

Before re-starting the separator, fill gear chamber with the lubricating oil specified on page 2/1. Oil level must be slightly above middle of sight glass. Then let the separator run without bowl for 10 minutes.

8.1 Disassembling the vertical gear parts

After disassembling the bowl, loosen oil drain screw and drain oil into oil cup.

Unscrew hex head screws from gear sight glass and remove sight glass (Fig. 8/1a).

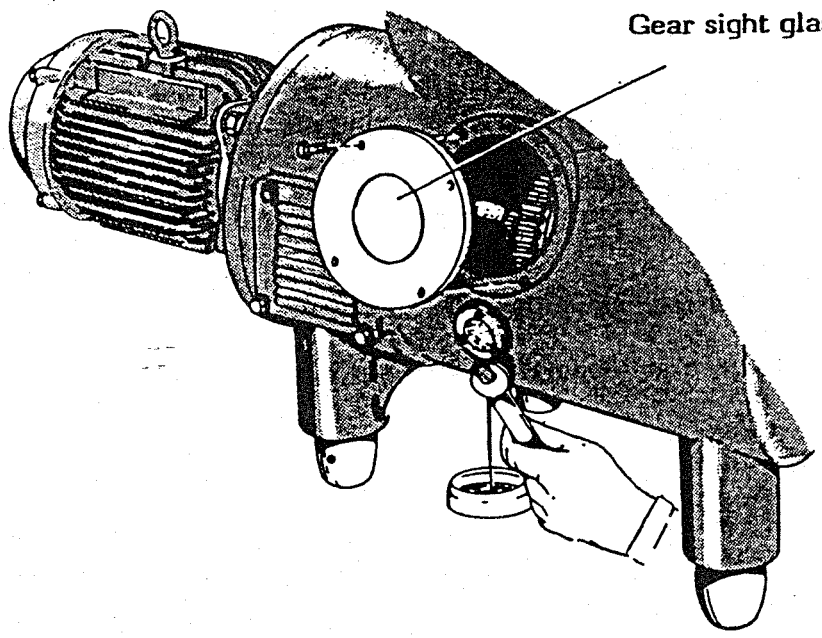

Fig. 8/1a

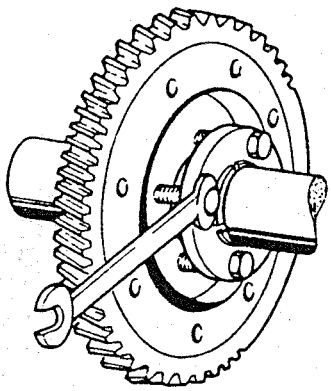

Fig. 8/1b

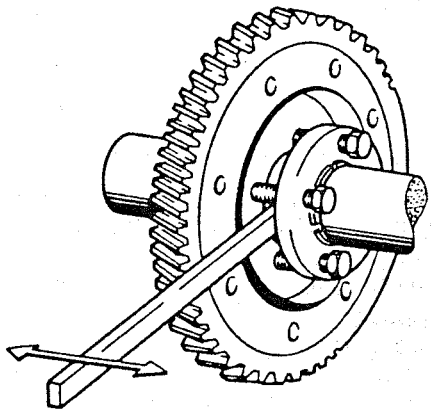

Fig. 8/1c

Loosen hex head screws in clamp plates of worm wheel (Fig. 8/1b). Then slacken clamp plates until worm wheel can be moved on worm wheel shaft (Fig. 8/1c). Push worm wheel to the left.

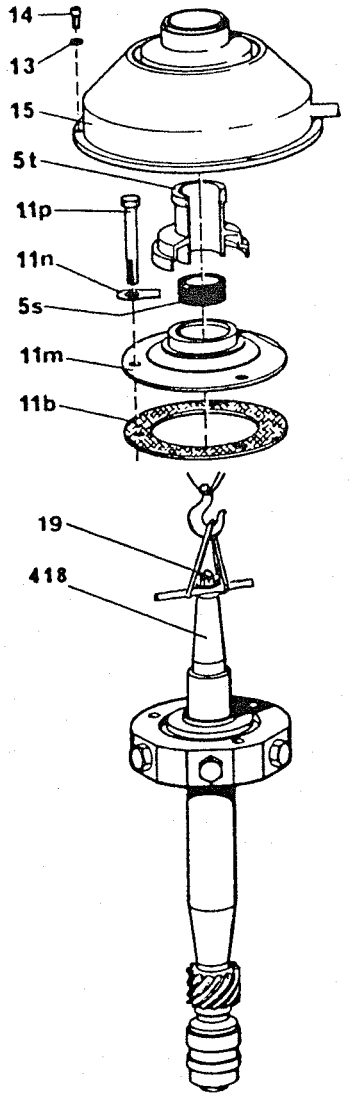

Fig. 8/2a

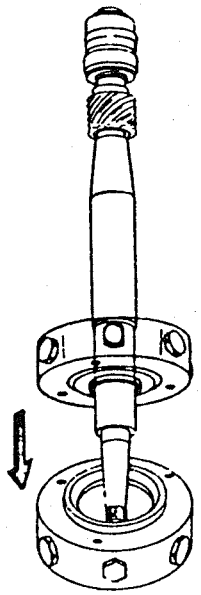

Fig. 8/2b

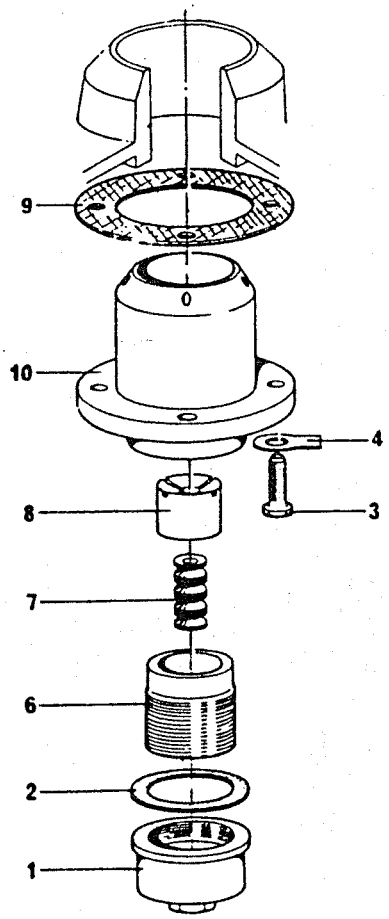

Fig. 8/2c

Disconnect operating-water supply line and remove sleeves 37 and 39 (Fig. 13).

Fig. 8/2a: Undo screws 14 and remove operating-water feeding device 15 and spindle cap 5t. Straighten safety washers 11n and unscrew hex head screws 11p from the neck bearing. Take off protection cap 11m and spindle spring 5s.

Fasten tool 418 to worm spindle with screw 19 (fig. 19) and lift out spindle together with neck bearing bridge.

Fig. 8/2b: To remove neck bearing bridge, hold spindle in inverted position, upper end down, and tap spindle lightly against a wooden surface. Neck bearing bridge will then slide off.

Fig. 8/2c: Unscrew bottom bearing cap 1 and remove gasket 2. Unscrew bottom bearing threaded piece 6 and remove it together with spring column 7 and bottom bearing pressure piece 8.

Should the case arise that bottom bearing housing 10 has to be replaced, then proceed as follows: Straighten tab washers 4 and undo hex head screws 3. Take two of these screws and thread them into the tapholes of the bottom bearing housing. By doing so, the bottom bearing housing will be pressed out of the frame.

8.2 Re-assembly of vertical gear parts (Fig. 14)

For re-assembly proceed in reverse order of removal (see 8.1) and according to the instructions given in sect. 8.2.1 - 8.2.3.

8.2.1 Important hints for re-assembly

- Before re-assembling the vertical gear parts, thoroughly clean gear chamber (see 7.5).
- Check condition of ball bearings before fitting them onto the worm spindle.
  IMPORTANT: Use only high-speed precision ball bearings (see List of Parts).

  For reasons of safety the ball bearings of the worm spindle and the worm wheel shaft must be replaced every 5,000 operating hours.
- Before fitting ball bearings, ball bearing protection rings 5d and 5g and ring 5n on the spindle, heat these parts in oil to approx. 80 °C.

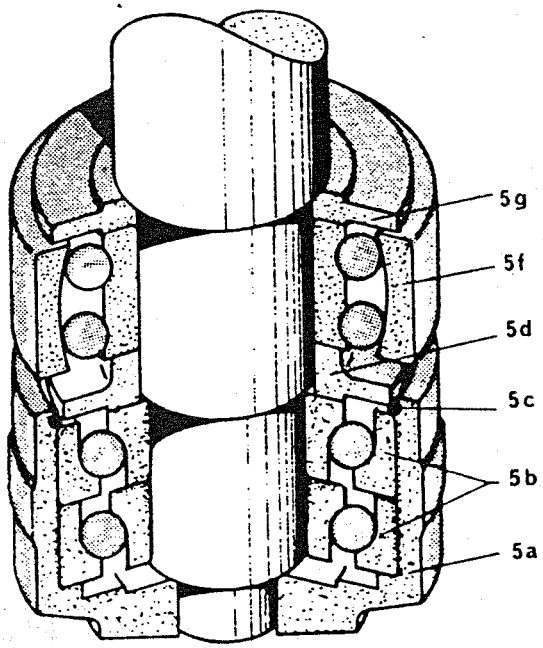

Fig. 8/3

- If one of the two angular contact ball bearings 5b needs replacement, be sure to replace both of them.
  Note that the angular contact ball bearings may be loaded axially in **one direction only.** They must be fitted as shown in Fig. 8/3. The **narrow** rim of the **outer** ring of each bearing must be **on top.** Faulty mounting will inevitably result in damage to bearings.

  For assembly proceed as follows:
  Slide the heated angular contact ball bearings onto the spindle, slip snap ring 5c over the ball bearings and let ball bearings cool down. Then fit bottom bearing pressure housing 5a over the ball bearings, and press snap ring 5c into the groove of the bottom bearing pressure housing.
- It must be possible to install the worm spindle, with ball bearings attached, without having to rap on the upper spindle end, and to move the built-in spindle axially by hand. If this is not the case, smooth the inside of the bottom bearing housing with a very fine emery cloth.
- When installing a new worm 5k, the worm wheel assembly 10 (Fig. 15) should be replaced at the same time.
- When installing the neck bearing bridge assembly 11c-h, make sure that the gaskets 11b and 11k are in good condition. Be sure to install distance ring 11a.
- Before installing the neck bearing protection cap check to be sure that there is a distance of 3 - 3.5 mm between cams of distance ring 11a (Fig. 8/5b) and neck bearing bridge 11d. If not, proceed according to the instructions given in sect. 8.3.2.
- IMPORTANT: After re-assembly of the vertical gear parts, check bowl height for possible re-adjustment (see 8.3).

8.2.2 Assembling the neck bearing bridge

The upper ball bearing of the spindle is contained in pressure ring 11c, which is held by nine radially arranged, evenly distributed springs 11g.

Insert pressure ring 11c in neck bearing bridge 11d in such a manner that the nine recesses of the pressure ring face the nine tapholes of the neck bearing bridge.

Grease spring pistons 11h thoroughly. Fit neck bearing springs 11g into spring pistons. Then put spring pistons into threaded plugs 11f.

Screw threaded plugs with neck bearing springs and spring pistons into the nine tapholes of the neck bearing bridge, and tighten them.

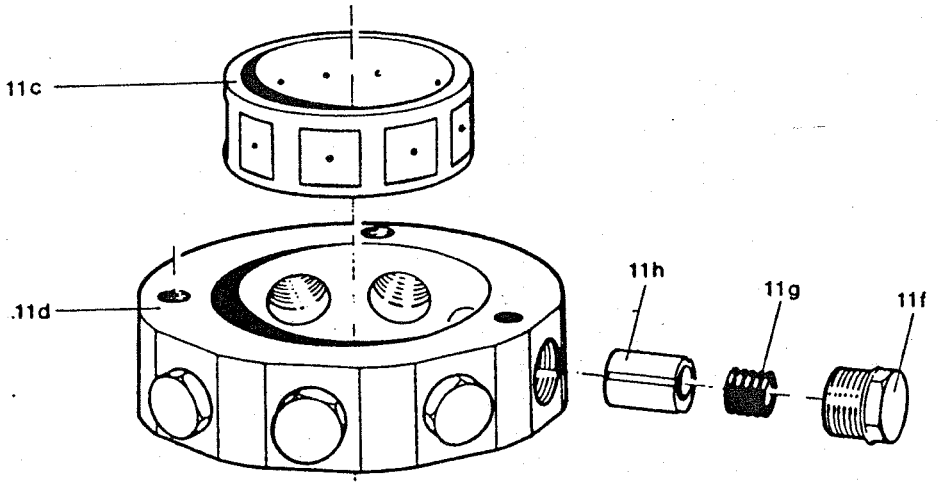

Fig. 8/4a

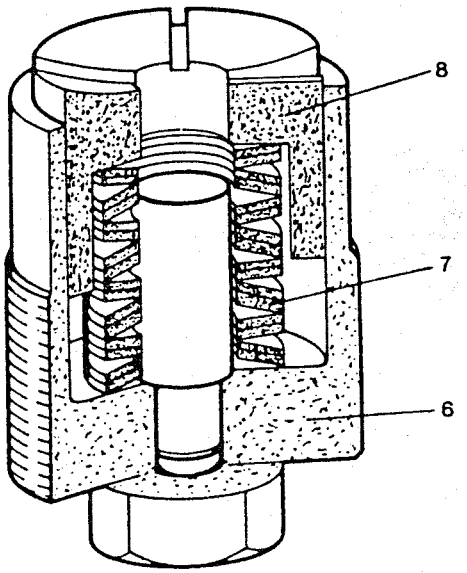

Fig. 8/4b

8.2.3 Fitting the spring column into the bottom bearing

Slide cup springs 7 onto bolt of bottom bearing threaded piece as illustrated in Fig. 8/4b.

Insert bottom bearing pressure piece 8 into bottom bearing threaded piece, sliding it over the cup springs.

8.3 Bowl height

8.3.1 Checking the bowl height

IMPORTANT: The bowl height is adjusted at the factory before the separator is shipped. It must be checked for re-adjustment before the first start of the separator, after re-assembling the vertical gear parts, after exchanging the bowl or the centripetal pump, and as soon as the centripetal pump shows any grinding marks.

Prerequisite to correct bowl height adjustment is that

- the bowl is properly closed (the "O" marks on bowl lock ring and on bowl bottom must be in line with each other),
- the hood is properly seated on sediment collector and hex head screws are tightened securely,
- upper centripetal pump is screwed onto lower centripetal pump as far as it will go and that centripetal pump assembly is screwed all the way into the disc.

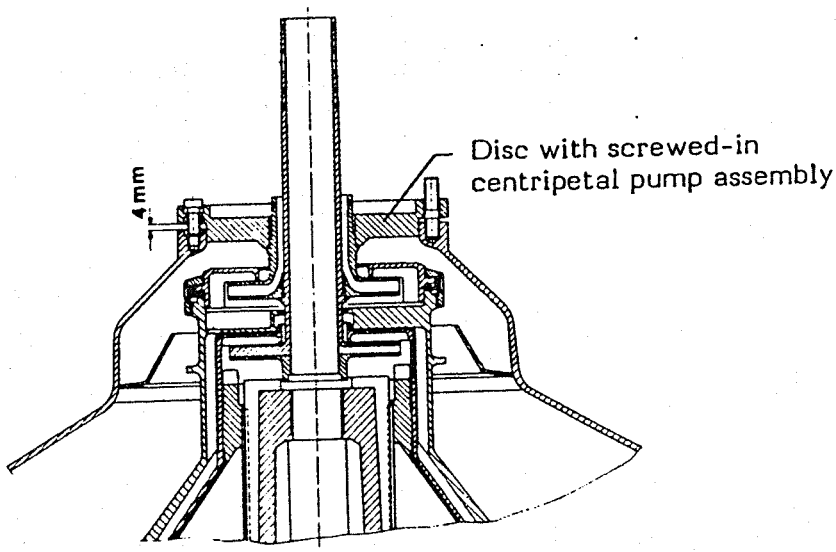

Fig. 8/5a

The bowl height is correct when the disc with screwed-in centripetal pump assembly can be raised by about 4 mm. Otherwise the bowl height has to be re-adjusted (see 8.3.2).

8.3.2 Re-adjusting the bowl height

For re-adjustment of the bowl height proceed as follows:

Unscrew bottom bearing cap 1 (Fig. 14). Adjust bowl height by turning bottom bearing threaded piece 6. A full turn of the bottom bearing threaded piece to the Right or to the Left raises or lowers the bowl by 2 mm.

If the clearance shown in Fig. 8/5a is **greater than 4 mm,** the bowl is too high. Lower the bowl by turning the bottom bearing threaded piece in **counter-clockwise** direction.

If the clearance shown in Fig. 8/5a is **less than 4 mm,** the bowl is too low. Raise the bowl by turning the bottom bearing threaded piece in **clockwise direction.**

If the bowl has to be raised by more than 1 mm, then it has to be removed (see 4.3). Remove operating-water connection and sleeves 37 and 39 (see Fig. 13). Undo screws 14 (Fig. 8/2a) and remove operating-water feeding device 15. Take off spindle cap 5t, undo screws 11p and remove neck bearing protection cap 11m. Then turn bottom bearing threaded piece clockwise until bowl is adjusted to proper height.

Each time the bowl has been lowered or raised, check if there is a clearance of 3 to 3.5 mm between cams of distance ring 11a (Fig. 8/5b) and neck bearing bridge 11d. In order to be able to check this clearance, remove bowl, operating-water feeding device, spindle cap and neck bearing protection cap, unless these parts have already been removed before raising the bowl by more than 1 mm. This check is not required if it has been made after re-assembling the vertical gear parts (see 8.2.1) and the bowl had not to be raised by more than 1 mm.

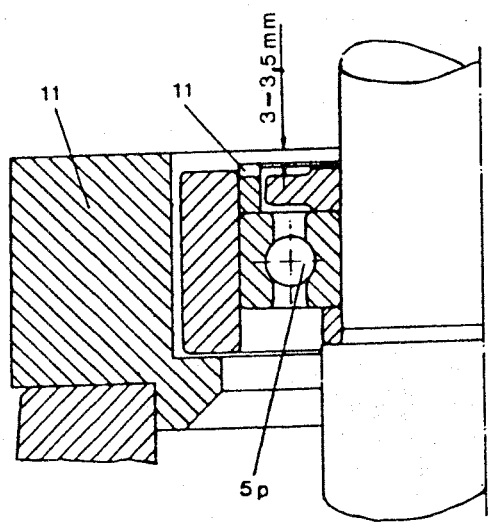

Fig. 8/5b

If the clearance between the cams of the distance ring and the neck bearing bridge is smaller than 3 mm, the cams have to be filed to proper dimension. If the distance is greater than 3.5 mm, increase height of cams by welding or check with the factory for a new distance ring with properly sized cams.

After checking the clearance between distance ring and neck bearing bridge, re-install the disassembled parts.
When mounting the operating-water connection make sure that gaskets 38 (Fig. 13) are in good condition.
Replace bottom bearing cap 1 (Fig. 14) including gasket 2 and screw on tightly.

Bear in mind that after fastening the neck bearing protection cap, the distance ring 11a and, hence, the ball bearing 5p will be under pressure until the spring column in the bottom bearing is compressed by the weight of the bowl.

8.4 Removal of the horizontal gear parts

8.4.1 Removing the motor

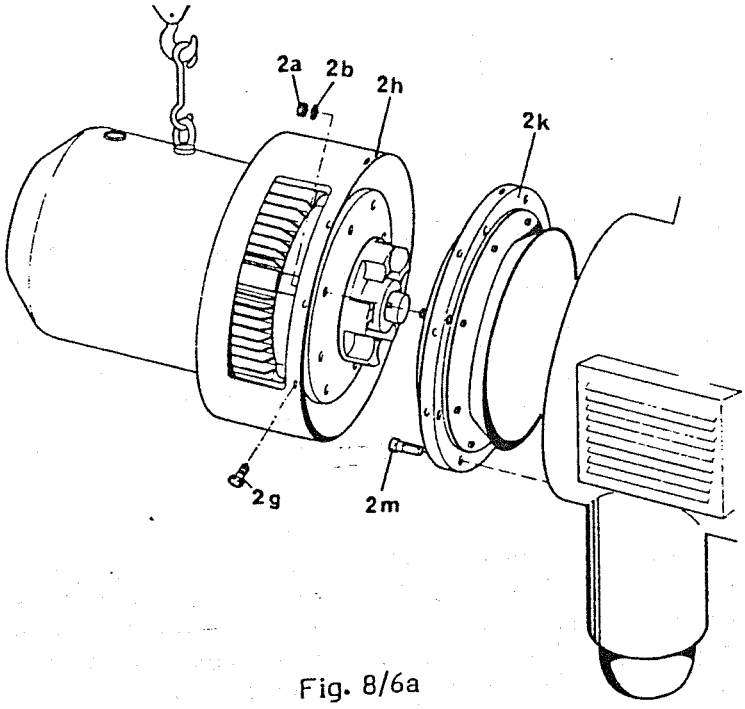

Fig. 8/6a

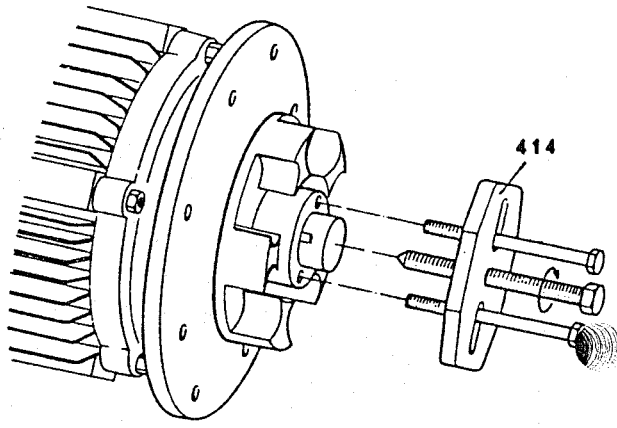

Fig. 8/6b

Remove lead-in wires from motor terminals. Unscrew hex head screws 2g and move cover 2h sidewards. Sling motor to hoist and tighten carrying rope. Then unscrew hexagon nuts 2a through opening of cover which can be turned on the flange. Take off lock washers 2b.
Use hoist to lift off motor together with cam hub (see Fig. 8/6a).

For removing cam hub from motor shaft end use puller 414 (Fig. 8/6b).

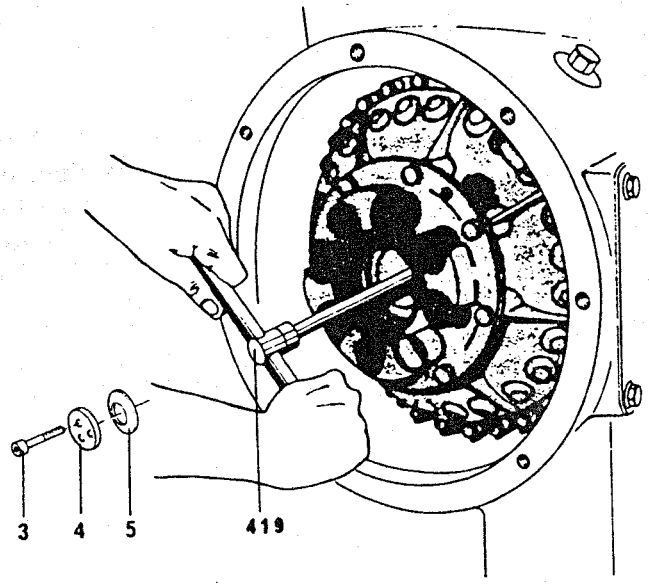

Fig. 8/6c

8.4.2 Removing the fluid clutch

After removing the motor, undo Allen screws 2m and take off flange 2k (Fig. 8/6a).

Loosen Allen screws 3 with torque wrench 416 (Fig. 20) by consecutively giving each screw a quarter of a turn until tension of cup spring 5 slackens. Then screw out Allen screws all the way and remove washer 4 and cup spring 5.

It may happen that one of the three Allen screws can only be loosened by applying great force. In this case re-tighten the two remaining screws so that all three screws are equally tight. Then start loosening again as described above.
Be sure the socket of the wrench 416 is not worn!

To remove fluid clutch from cone of worm wheel shaft use pulling device 419.

8.4.3 Removing the worm wheel shaft

Remove the fluid clutch (see 8.4.2).

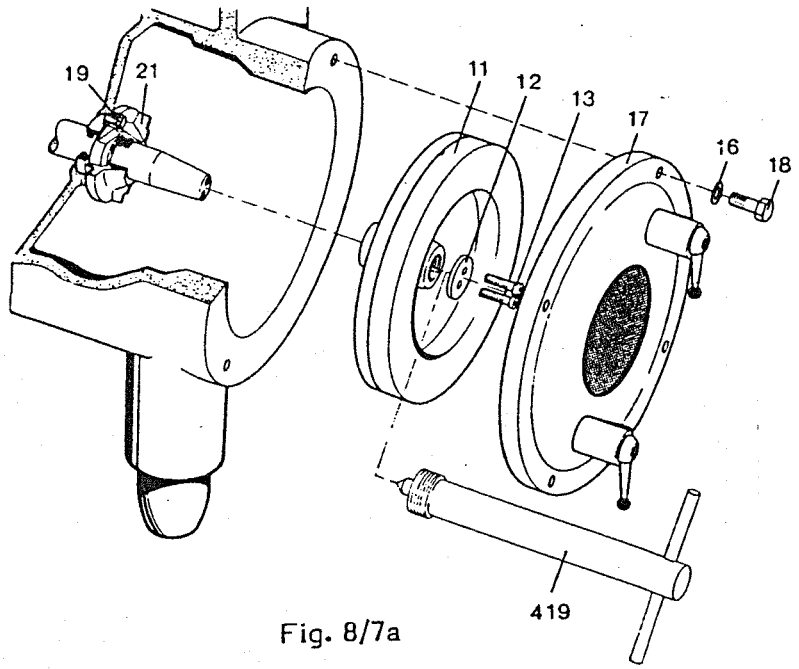

Fig. 8/7a

Undo hex head screws 18 and remove cover 17.

With the aid of wrench 416 undo Allen screw 13. Remove washer.

With the aid of device 419 pull brake pulley 11 off the cone of worm wheel shaft.

Undo hex head screws 19 (on bearing cover 21, brake side).

Loosen oil drain screw and let oil drain into oil cup. Remove revolution indicator housing (Fig. 8/1a).

Loosen hex head screws in clamp plates of worm wheel. Then slacken clamp plates and move worm wheel to the left (Figs. 8/1b, 8/1c).

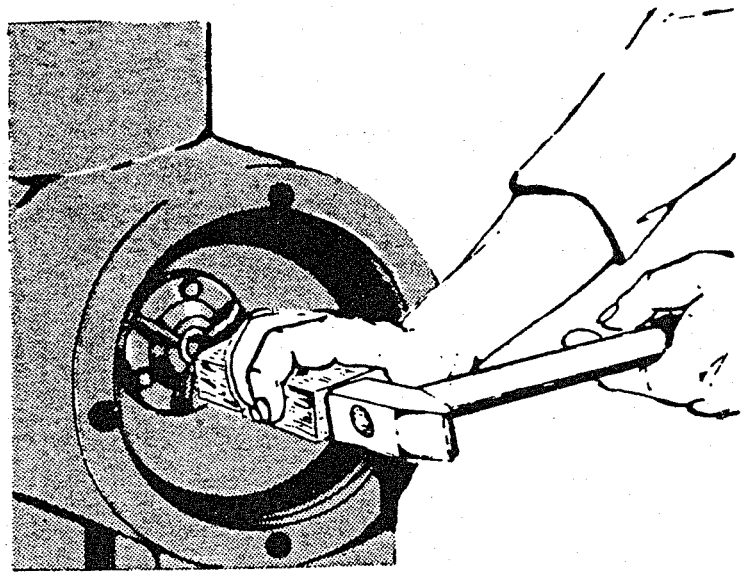

Fig. 8/7b

Place a hard wood block against worm wheel shaft end, on motor side, and rap it lightly with a hammer to drive out the shaft together with ball bearing, nut and bearing cover **towards brake side.** When the shaft has completely loosened from the ball bearing on the motor side, remove it by hand. While pulling out the shaft, hold the worm wheel to prevent damage to the gear teeth. Then take worm wheel assembly with clamp plates out of the gear chamber.

8.5 Re-assembling the horizontal gear parts (Fig. 15)

For re-assembly proceed in reverse order of removal (see sect. 8.4). The following should be kept in mind:

- The worm wheel with clamp plates, 10, has been balanced in the factory as complete assembly. Except for the clamp plates, component parts of the assembly must, therefore, **not** be replaced individually, since this could lead to unbalance.
- When mounting the worm wheel assembly with clamp plates, be sure to push worm wheel towards brake side until it rests against the shoulder of the worm wheel shaft. This will ensure correct positioning of the toothed rim with reference to the worm of the spindle.
- The worm wheel must be firmly clamped to the worm wheel shaft, - accomplished by tightening screws 10c in both clamp plates. Tighten screws crosswise, by single turns, to make sure clamp plates are drawn together evenly.
- **IMPORTANT:** When the toothed rim is worn, the entire worm wheel assembly with clamp plates, 10, has to be replaced. Worm 5k (Fig. 14) should be replaced at the same time, since this part, also worn to some extent, would cause premature wear to the new worm wheel.

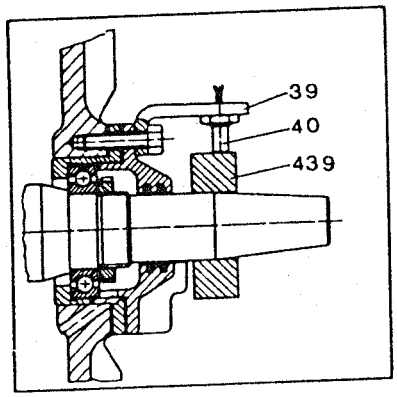

Fig. 8/8

- Re-adjust proximity switch 40 with the aid of adjusting ring 439 (Fig. 8/8).
- Before installing the fluid clutch and the brake pulley, apply a thin film of grease to the tapered ends of the worm wheel shaft. Then clean and wipe dry the tapered ends with a smooth rag. Also clean the inside of the hubs of the fluid clutch and brake pulley very carefully to ensure proper fitting.
- The fluid clutch and the brake pulley must be firmly clamped to the worm wheel shaft. This is accomplished by tightening Allen screws with torque wrench 416. Tighten the screws consecutively, by single turns. Give the final tightening at 40 - 41 Nm on the torque scale. When installing the fluid clutch, be sure to place cup spring 5 under the washer. For correct arrangement refer to Fig. 15.
- When installing the motor, make sure that there is a clearance of **4 mm** between cam hub 31 and fluid clutch (Fig. 15). The clearance must be checked after exchanging the motor, the cam hub, the fluid clutch or the worm wheel shaft. If necessary, displace the cam hub on the motor shaft and drill a new location hole in the shaft for threaded pin 30.
- Fill gear chamber with the oil specified in sect. 2. Oil level must be slightly above middle of sight glass.
- Check spindle speed with a hand tachometer and check direction of rotation of bowl (see sect. 3.2).
- To run in new gear parts (worm wheel and worm), let the separator run - without bowl - for about an hour. During this time, switch the motor on and off several times.
- For reasons of safety, replace ball bearings fitted on worm wheel shaft and on worm spindle every 5,000 operating hours.

9.1 General

The fluid clutch (Turbo Clutch) gradually brings the bowl to its rated speed, eliminating premature wear on gear parts and on motor. The motor power is transmitted by means of a closed oil circuit between a primary wheel driven by the motor shaft and a secondary wheel driving the worm wheel shaft of the separator.

The oil level in the fluid clutch must be up to the mark of the oil level indicator plate, to ensure that the bowl comes up to its rated speed within its starting time (see sect. 3.3).

When **less oil** is filled in, slippage in the clutch will be too great and starting time of the bowl too long. If the clutch contains **too much oil,** the starting time of the bowl will be too short, resulting in overload of motor and gear.

The oil in the clutch has to be changed every 10.000 working hours. It should be changed when the ball bearings of the worm spindle and of the worm wheel shaft are being replaced.

The clutch requires

approx. 6.0 litres of oil when using a 1455 rpm motor,
approx. 4.8 litres of oil when using a 1745 rpm motor.

Be sure to use only the type of oil specified in sect. 9.4.

9.2 Checking the oil level

The oil level has to be checked before the initial start-up of the separator and every time after re-filling of oil. Furthermore, the oil level should be checked once a month since in the course of time small oil losses may occur.

Before checking the oil level, make sure oil has cooled down.

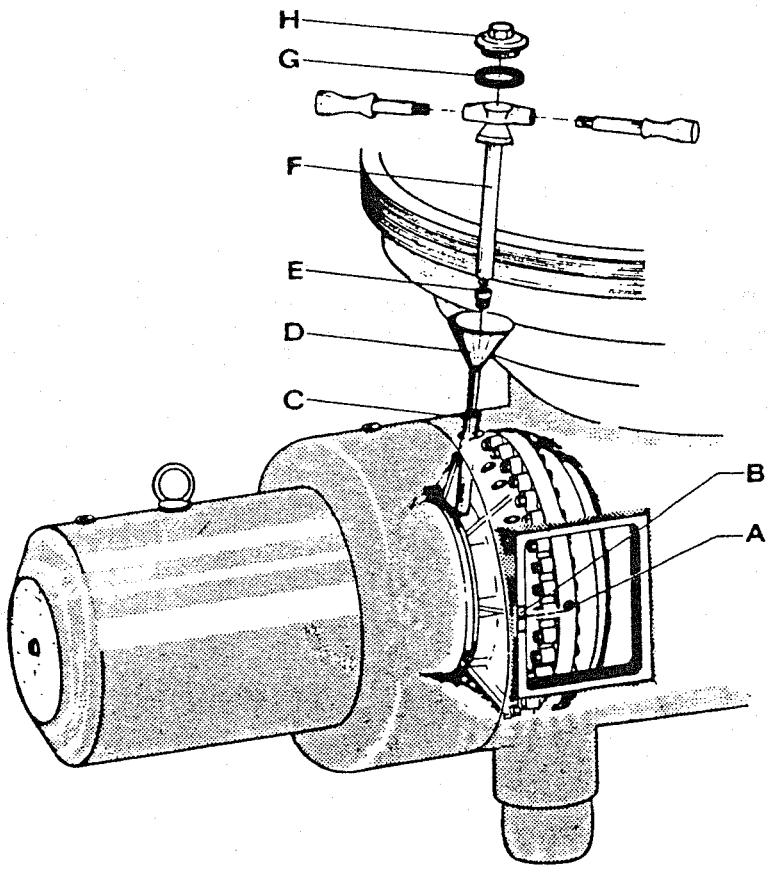

Checking the oil level:

a) **Brand new separator**
Mark on oil level indicator plate B must be in line with lower edge of taphole A. Oil level must be up to the lower edge of taphole A.

b) **Separator with replacement clutch**
If a replacement clutch is installed, then the existing oil level indicator plate is no longer valid. By measuring the peak power consumption or the speed of the shaft, the correct amount of oil can be determined and the oil level indicator plate be re-set accordingly.

Fig. 9/1

For checking the oil level, proceed as follows:

a) **The separator still has its original clutch**
Remove the ventilation grid so that the oil level indicator plate can be seen. Bring the clutch into such a position that threaded plug A (Fig. 9/1) can be removed without oil flowing out. Unscrew threaded plug with a wrench. Then turn clutch until lower edge of taphole is in line with mark on oil level indicator plate (Fig. 9/1). In this position, the oil level in the clutch must be up to the lower edge of the taphole, so that the oil begins to overflow. If this is not the case, refill oil (see 9.3).

b) **The separator has a replacement clutch**
If the clutch is replaced, then the original oil level indicator plate is no longer valid. The clutch has been filled with the correct amount of oil if the peak power consumption when the machine is starting up reaches a level which is twice as high as the rated power consumption. If an exact measurement of power consumption is not possible, then the correct amount of oil can be determined by measuring the speed of the horizontal drive shaft in the separator. When the separator is operating at its rated throughput, the shaft should be rotating at 1420 rpm (mains frequency 50 c/s) or at 1710 rpm (mains frequency 60 c/s).
If the peak power consumption or the speed of the shaft is much higher than these figures, then there is too much oil in the clutch; if they are much lower than these figures, then there is not enough.
Once the correct amount of oil has been established, the oil level indicator plate must be re-set accordingly.

9.3 Re-filling of oil (Fig. 9/1)

Remove threaded plug H. Loosen oil fill screw E with wrench F. Then take off the handles from the wrench and continue unscrewing the oil fill screw until it comes off. Now thread oil fill pipe C into the oil fill hole, introduce funnel D and pour in oil. Then check oil level (see 9.2) before replacing oil fill screw including gasket. Use wrench F to **firmly** tighten the oil fill screw.

9.4 Type of oil

For filling the fluid clutch use only steam turbine oil

TDL 32 according to DIN 51515.

which has proved satisfactory in operation by meeting requirements as regards viscosity, flash point*, lubricating properties, compatibility with metals and gaskets, aging, etc.

This oil complies with the following specifications:

Designation: Lubricating oil TDL 32 (according to DIN 51515)
(steam turbine oil with additives giving increased protection against corrosion and increased resistance to aging).

Kinematic viscosity:	32 ± 3.2 mm^2/s (cSt) at 40 °C
Density at 15 °C:	max. 0.900 g/ml
Pour point:	$\leq$ -6 °C
Corrosive effect on	
copper:	degree of corrosion 2 - 100 A3 (according to DIN 51759)
steel:	degree of corrosion 0 - A (according to DIN 51585)
Aging characteristics:	Increase of the neutralization number after 1000 h: max. 2.0 mg KOH/g oil (according to DIN 51587)

*** Contrary to DIN 51515:** Open flash point according to Cleveland: approx. 220 °C.

The following branded oil meets this requirement: **SHELL Turbo Oil T 32.**

Steam turbine oils TDL 32 of other brands may be used, provided they have an open flash point according to Cleveland of approx. 210 °C which is contrary to DIN 51515.

Each separator is supplied with an amount of TDL 32 oil which is sufficient for one filling.

10.1 General

Troubles	Causes	Remedies
10.1.1 The bowl does not come up to rated speed or takes too long to do so (see 3.3).	Brakes are on.	Release brakes by turning handles clockwise.
	Motor is incorrectly connected.	See wiring diagram.
	The fluid clutch does not contain enough oil or clutch is leaky.	Refill oil (see 9.3). Re-tighten nuts 11 of screws 7 (Fig. 16) on clutch. If sealing rings 4 and 17 do not seal properly, ask for a reconditioned clutch in exchange for your clutch.
	Bowl is too high or too low and, therefore, rubs against centripetal pump.	Adjust to proper bowl height (see 8.3).
	Clamp plates are not tight enough; worm wheel slips on shaft.	Tighten long hex head screws on worm wheel evenly and **firmly.** Tighten crosswise, by single turns, with a torque of 45 Nm.
	Product feed valve is open.	Close product feed valve.
10.1.2 The bowl speed drops during operation.	The fluid clutch does not contain enough oil.	Refill oil (see 9.3).
	Motor speed drops during operation.	Inspect motor and line voltage.
	Main bowl gasket 15 (Fig. 19) in bowl top is damaged.	Replace the gasket (see sect. 4.4).
	Gaskets in bowl valve 3 (Fig. 19) are damaged; the bowl loses sealing water.	Replace gaskets. The bowl can be kept closed temporarily by opening the rapid-closing valve D (Fig. 5/4) for sealing water.
10.1.3 The bowl comes up to rated speed too quickly (in less than 5 minutes). Motor pulls too high a starting current.	The clutch contains too much oil.	Check oil level (see 9.2). Reduce oil contents.

Troubles	Causes	Remedies
10.1.4 Uneven run of the separator.	Incomplete solids ejection. The remaining solids have deposited unevenly in the bowl.	De-sludge the bowl several times (6.2.2). If this does not improve conditions, close the bowl and fill it with water to attenuate the increased vibrations occurring during slowing-down of the bowl.
	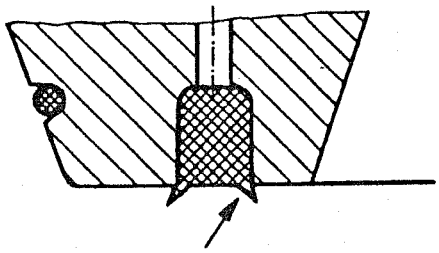	Stop the separator and apply brakes. If bowl is leaking, leave feed open. Clean bowl thoroughly. Remove protruding edges of bowl gasket with a knife (see sketch).
	Bowl is not properly assembled or, if plant has several separators, parts of different bowls may have been interchanged.	Assemble bowl properly (see 4.1).
	Tension of disc stack has slackened.	Make sure bowl lock ring is screwed on tightly (see 4.1, item 14). Check disc count. If necessary, add spare disc or compensating disc.
	Bowl is damaged and, therefore, out of balance.	Send bowl to factory or authorized factory repair shop. Do **not** attempt to make your own repairs. Never weld or solder. Bowl is made of heat-treated steels.
	Neck bearing springs are weak or broken.	Replace all 9 neck bearing springs.
	Ball bearings are worn.	Replace damaged bearings. **IMPORTANT:** When replacing, use only the high precision ball bearings as specified in the Parts List.

Troubles	Causes	Remedies
10.1.4 Uneven run of the separator (cont'd.)	Gear parts are in bad condition as a result of	Clean gear chamber thoroughly (see 7.5).
	1. normal wear,	Replace damaged gear parts (see 8.2 and 8.5).
	2. premature wear caused by: a) lack of oil b) oil of too low a viscosity, } in general, recognized by blue tempering colour of gear parts	Change oil (see chapt. 2). If necessary, change oil more often.
	c) metal abrasives present in the lubricating oil due to the following possible causes: viscosity of oil is too low, oil has not been changed in time, gear chamber has not been cleaned,	
	d) replacement of one gear part only, instead of both parts,	
	e) infiltration of water because shut-off valves D and F (Fig. 5/4) for sealing water were open for a longer period during shut-down of the separator.	Regarding **infiltration of water,** the following should be kept in mind: During shut-down of the separator, the shut-off valves D and F must always be kept closed.
10.1.5 Bowl lock ring is difficult to loosen.	Bowl has not been dismantled at regular intervals (see 7.2).	Unscrewing of the bowl lock ring can be very much facilitated by blocking the bowl, which is accomplished by putting wedges between bowl bottom and sediment collector.

10.2 Bowl performance (Fig. 10)

Troubles	Causes	Remedies
10.2.1 The bowl does not close at all. **IMPORTANT:** In this case switch off feed pump inmediately.	The amount of sealing water fed to the bowl is insufficient because	
	a) the water pressure in the supply line to the operating-water connection is too low (see 5.6).	a) Check pressure in water supply line. The pressure should be at least 1.5 bar. The pressure reducer shall be adjusted to 1 bar (for adjustment refer to sect. 5.3). Check also if there is sufficient sealing-water coming in. The sealing-water valve opens for 60 seconds after the separator has reached its operating speed and after each solids ejection. During this time the amount of discharging sealing water should be measured at the operating-water discharge. The sealing-water must discharge at a rate of 550 l/h. Sealing water can be supplied as often as you like by switching on and off the main switch on the timing unit.
	b) the water discharge holes in the top of the operating-water feed 11 are clogged with scale.	b) Clean discharge holes.
	Gasket 12 has not been inserted or is damaged.	Install or replace gasket.
	Strainer G in operating-water line is clogged.	Clean strainer.
	Gaskets of piston valve 3 are damaged.	Remove valve (see 4.6) and install new gaskets.
	Solenoid valve A (Fig. 5/4) does not function properly, because the diaphragm has become brittle and, therefore, fails to seal properly.	Install a new diaphragm. Make sure that hole on outer rim of diaphragm lies over hole of valve housing.
	Rapid-closing valve F (Fig. 5/4) is damaged. There is a continuous flow of opening water to the bowl.	Install a new rapid-closing valve.
	Gasket 5 in sliding piston is damaged or its edges have been frayed through the up-and down movement of the piston.	Replace damaged gasket. If, however, only the edges of the gasket are frayed and the gasket is not damaged otherwise, it can be re-used after grinding it off with an emery wheel.
	The operating-water feed 11 is clogged.	Clean operating-water feed.

Troubles	Causes	Remedies
10.2.2 The bowl does not close and open properly.	Gasket 5 in sliding piston does not fit properly at all points of the guide surfaces, thus failing to seal properly.	If necessary, stretch gasket. Before installing the gasket, **lightly** grease groove in sliding piston.
	Gasket 7 in bowl top is damaged.	Replace gasket (see 4.4).
	Gasket 10 in bowl bottom has not been inserted or is damaged.	Insert gasket or replace it.
	Gasket 5 in sliding piston is uneven in height.	Replace gasket. The difference in height on a gasket must not exceed 0.25 mm.
	Sealing surface 8 of sliding piston is damaged.	Replace the sliding piston.
10.2.3 The bowl does not open at all or not completely.	Dirt or rubber particles have settled between sliding piston 1 and bowl bottom 4.	Clean bowl parts. Round off edges of gaskets. Replace damaged gaskets. Grease guide surfaces with the special lubricating paste supplied.
	Sealing chamber 2 between bowl bottom and sliding piston is soiled.	Remove sliding piston 1 and clean sealing chamber.
	The drill holes in bowl valve 3 are clogged.	Remove the valve (see 4.5) and clean it.

Diagram of bowl and operating-water feed system
illustrating possible operating troubles

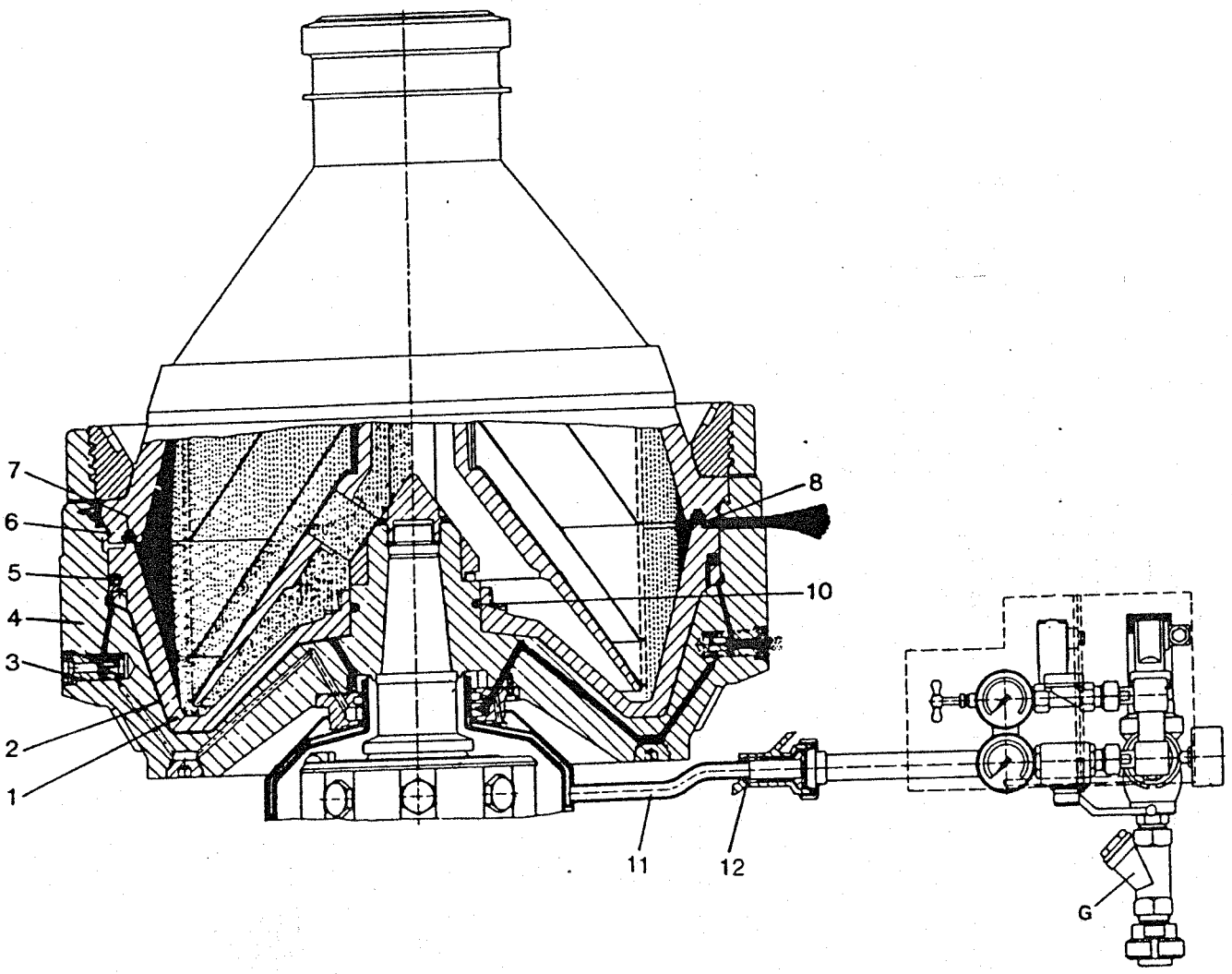

Fig. 10

Lubrication Chart / Servicing Program	Lubricant	Operating hours: 250	750	1500	2500	3000	5000	10000	MAINTENANCE	Every: week	3 months	6 months	1 year	2 years
	O	●							First oil change after initial start-up (see 2.1) and thorough cleaning of gear chamber.					
	O								Check oil level.	●				
	O		●						Oil change and thorough cleaning of gear chamber.			●		
	O			●					Lubrication of hand-operated parts such as brake bolt, valves, etc.			●		
	MF	whenever disassembling							Grease bowl lock ring and guide and sliding surfaces of bowl parts.	whenever disassembling				
	F								Grease motor ball bearings according to manufacturer's instructions.					
Cleaning			when necessary						Clean strainer in operating-water line.		when necessary			
Cleaning				●					Clean gear chamber (oil change).			●		
Cleaning						when necessary			Clean discharge holes in operating-water feeding system.			●		
Cleaning					●				Remove bowl and clean interior of frame and sediment collector.			●		
Cleaning		product dependent							Dismantle the bowl and clean thoroughly bores and chambers of the hydraulic system.	product dependent				
Inspection				●					Check bowl gaskets.		●			
Inspection				●					Check starting time and rated speed.			●		
Inspection				●					Check neck bearing springs and spring pistons. Check brake linings.			●		
Inspection						●			After removing the gear sight glass, check gearing of worm wheel gear.				●	
Inspection		product dependent							Check spaces between solids ejection holes.	product dependent				
Inspection									Bowl inspection. Check threads of lock rings for erosion and corrosion.				●	
Replacement							●		Replace ball bearings on spindle.					
Replacement							●		Replace ball bearings on worm wheel shaft.					
Replacement							●		Replace neck bearing springs.					
Replacement								●	Change oil in fluid clutch.					

Abbreviations:

O = Lubricating oil

MF = Molykote D
Molykote DX
Klüber grease

F = Ball and roller bearing grease

IMPORTANT!

When ordering parts, please state the following:

1) Model 2) Serial-No.	of the Separator: Both designations are shown on the name-plate of the separator. The Serial-No. also appears on the rim of the sediment collector.
3) Description 4) Part-No.	of the part to be replaced: For details refer to List of Parts. The Part-No. is also shown on all major parts.
5) Bowl Serial-No.	(only required when ordering bowl parts): The Bowl Serial-No. appears, in large figures, on bowl lock ring and on bowl bottom.

Part-Numbers ending with letter "L" (e. g. 3158-1021-L) designate parts which are available in different designs for the separator concerned. To ensure correct delivery of these parts, Model **and Serial-No. of the Separator MUST be stated.**

No.in Fig.	Part - No.	Qty.	Part Description
-	1176-7759-000	1	Hood assembly (41a-41p)
41a	0004-2364-758	1	Packing cord 8x8x2620
41b	0019-6970-400	8	Hex head screw M 12x30 DIN 933
41c	1169-7765-000	1	Hood
41d	0007-2262-750	1	Gasket 45/57x6
41f	1165-1061-000	1	Inspection cover
41g	0013-0405-400	2	Cap nut M10 DIN 1587
41h	0013-2645-300	4	Cap nut M10
41k	1165-2775-000	1	Siphon, complete
41m	0013-2842-300	1	Grooved coupling nut F25 DIN 11851
41n	0007-2208-750	1	Gasket G25 DIN 11851
41p	0026-1348-400	4	Washer 10.5 DIN 125
42	0019-6536-400	8	Hex head screw M 12x50 DIN 931
43	0004-2286-400	8	Gasket 12.7x18x1.5
44a	2265-1157-020	1	Ring
44b	0007-2693-750	2	Gasket 562/572x5
44c	2265-1157-030	1	Ring

No.in Fig.	Part - No.	Qty.		Part Description
-	3170-1020-010	1		Foundation frame assembly (1a-c)
1a	3170-1003-010	1		Foundation frame
1b	0026-2031-300	4		Cap
1c	3157-1033-000	4		Bolt
-	2315-1015-010	4		Foot, complete (2a-c)
2a	2315-1011-000	4		Foot with lining
2b	0019-6387-400	4		Threaded pin M 12x28 DIN 915
2c	0021-3018-750	4		Rubber cushion
3	0001-0516-300	4		Flange
4	0019-6937-400	12		Hex head screw M 10x30 DIN 933
5	1166-1006-030	1		Lower section of frame, complete
5a	0018-3955-300	1	*	Cone connection D50 DIN 11851
5b	0013-2845-300	1	*	Grooved coupling nut F50 DIN 11851
5c	0007-2211-750	1	*	Gasket G50 DIN 11851
6	0007-2954-750	1		Gasket 590/4
7	0019-6202-400	8		Allen screw M 16x45 DIN 912
8	0004-2290-400	8		Gasket 16.7/24x1.5
9	0007-2212-750	1		Gasket G65 DIN 11851
10	1169-1177-020	1		Bend
11	0013-2846-300	1		Grooved coupling nut F65 DIN 11851
12	0007-2571-750	1		Gasket 297/4
13	0026-1325-300	8		Lock washer B8 DIN 127
14	0019-6122-400	8		Allen screw M 8x20 DIN 912
15	2265-1219-000	1		Operating-water feed
16	1169-1018-010	1		Sediment collector
17	0007-2580-750	1		Gasket 42/2.5
18	1169-1183-000	1		Plug
19	0013-0404-400	2		Cap nut M8 DIN 1587
20	0007-2320-750	1		Gasket 45/55x5
21	0007-2808-840	1		Gasket 545/563x9.8
22	0019-0840-400	1		Oil drain screw
23	0004-5037-710	1		Gasket 38/50x1.5
24	0001-0022-400	1		Sight glass frame
25	0019-6845-400	3		Hex head screw M 6x25 DIN 933
26	0001-0027-830	1		Sight glass
26a	0004-5406-750	1		Gasket 110x3
26b	0004-5056-740	1		Gasket 70/80x2
27	0026-1371-400	4		Washer 13 DIN 125
28	0019-6970-400	4		Hex head screw M 12x30 DIN 933
29	3050-1085-010	1		Ventilation grid
30	0019-6966-400	4		Hex head screw M 12x20 DIN 933
31	0026-1375-300	4		Washer
32a	0001-0925-870	1		Sight glass 322x5
32b	1166-1157-020	1		Ring
33	0007-2229-750	1		Gasket 40/48x5
34	0019-1748-400	1		Plug
35	0004-5762-700	2		Gasket 273/322x2
36	0007-2208-750	2		Gasket G25 DIN 11851
37	1169-1074-000	1		Sleeve
38	0007-2521-750	2		Gasket G15 DIN 11851
39	1169-1074-010	1		Sleeve

* This part is included in the preceding "complete" part, but it is also available as separate item.

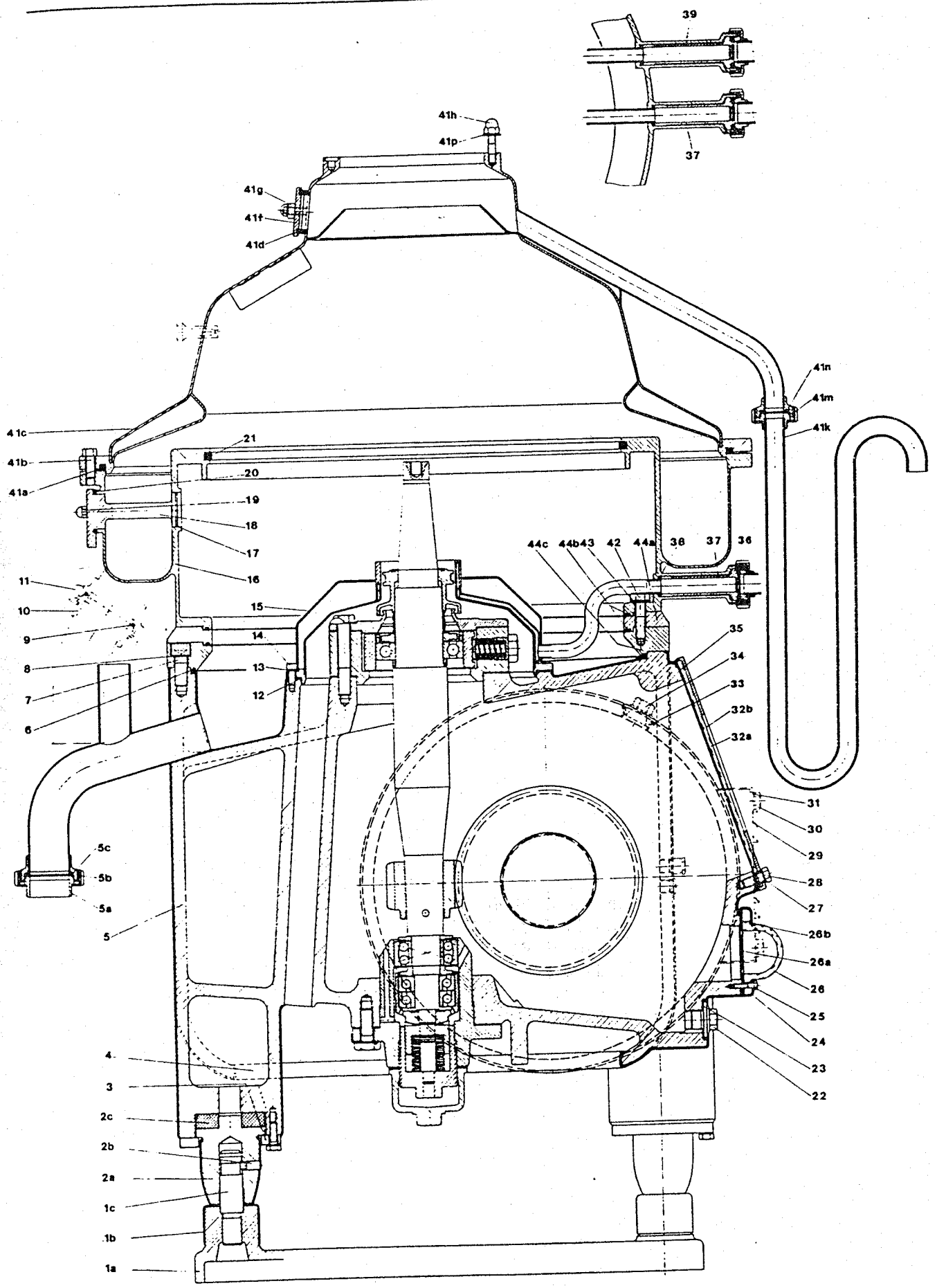
39
37
41h
41p
41g
41f
41d
41n
41m
41k
41c
41b
41a
21
20
19
18
17
16
15
14
13
12
11
10
9
8
7
6
44c
44b
43
42
44a
38
37
36
35
34
33
32b
32a
31
30
29
28
27
26b
26a
26
25
24
23
22
5c
5b
5a
5
4
3
2c
2b
2a
1c
1b
1a

Fig. 13/1

Vertical Gear Parts (f = 50 Hz)

No.in Fig.	Part - No.	Qty.	Part Description
1	0010-800[illegible]-210	1	Bottom bearing cap
2	0004-2221[illegible]-740	1	Gasket 80/108x2
3	0019-70[illegible]-150	4	Hex head screw M 16x45 DIN 933 - 8.8
4	0026-58[illegible]-600	4	Tab washer 17 DIN 93
-	2265-3425[illegible]-000	1	Worm [illegible]indle assembly (5a-u)
5a	0010-8012[illegible]-020	1	Bott[illegible] bearing pres[illegible]re housing
5b	0011-7307[illegible]-100	2	[illegible]ntact ba[illegible] 7307 BG[illegible]
5c	0026-2109[illegible]-170	1	
5d	0008-4008-0[illegible]30	[illegible]	
5f	0011-2308-12		
5g	0008-4008-02		
5h	0026-1579-12		
5k	2265-3423-00		[illegible]
5m	2265-3410-00		[illegible]
5n	0008-6512-05		[illegible]ng
5p	0011-6213-1[illegible]	1	Gro[illegible] ball [illegible]
5r	0008-6508-050	[illegible]	[illegible]
5s	0006-4383-16[illegible]		[illegible]
5t	0008-5501-70[illegible]		
5u	0007-244[illegible]-7[illegible]		
6	0010-8002-04[illegible]		[illegible]ton[illegible] [illegible]ece
7	0006-4440-16[illegible]		[illegible]ring co[illegible]
8	0010-8001-20[illegible]		[illegible]ttom b[illegible] pressure piece
9	0004-5793-77[illegible]		[illegible]ket [illegible]x0.3
10	3050-1112-02[illegible]		[illegible]to[illegible] [illegible]g housing
-	0008-6500-09[illegible]		[illegible] bridge assembly with co[illegible] [illegible]-p)
11a	0008-6509-05[illegible]		[illegible]ng
11b	0004-5851-77[illegible]		[illegible]/235x0.3
-	0008-6510-07[illegible]		[illegible] bridge assembly (11c-h)
11c	0008-6507-00[illegible]		[illegible]g
11d	0008-6506-00[illegible]		Nec[illegible]ng bridge
11f	0019-1423-03[illegible]		Thr[illegible]lug
11g	0006-4380-0[illegible]		Set [illegible]eck bearing springs
11h	0026-2220-11[illegible]	9	Spring piston
11k	0004-5852-77[illegible]	1	Gasket 156/235x0.3
11m	0008-6502-12[illegible]	1	Protection cap
11n	0026-5894-6[illegible]00	3	Tab washer 17 DIN 93
11p	0019-6616-150	3	Hex head screw M 16x100 DIN 931 -

* When this part needs replacement, the worm wheel assembly with clamp plates, 15, should be replaced as well.

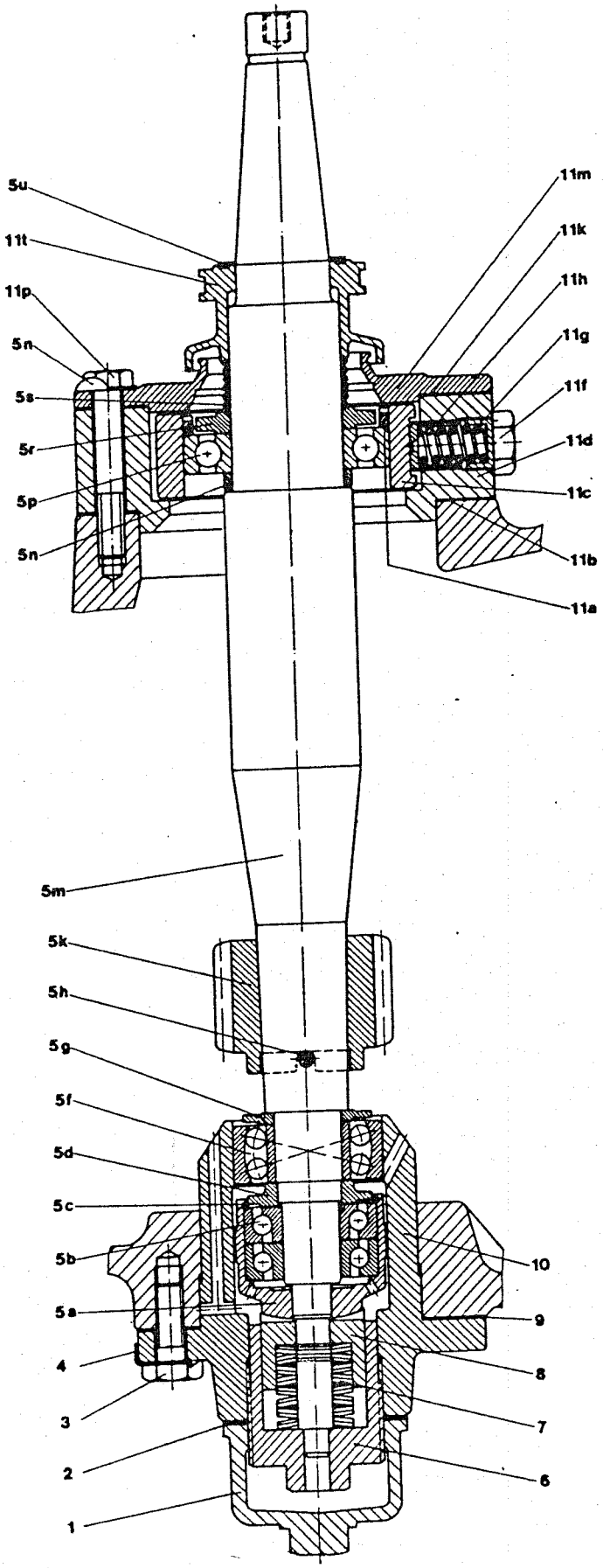
5u
11t
11p
5n
5s
5r
5p
5n
11m
11k
11h
11g
11f
11d
11c
11b
11a
5m
5k
5h
5g
5f
5d
5c
5b
5a
4
3
2
1
10
9
8
7
6

Fig. 14

No.in Fig.	Part - No.	Qty.		Part Description
1	5990-L	1	*	Motor
-	1176-1021-L	1		Flange assembly (2a-m)
2a	0013-0282-400	8		Hexagon nut M 16 DIN 934
2b	0026-1330-190	8		Lock washer A 16 DIN 127
2f	0019-7727-090	8		Stud M 16x45 DIN 939 - 5.6
2g	0019-6839-300	8		Hex head screw M 6x10 DIN 933
2h	1176-1475-000	1		Cover
2k	1165-1028-L	1		Flange
2m	0019-6202-150	8		Allen screw M 16x45 DIN 912 - 8.8
3	0019-6150-150	3		Allen screw M 10x55 DIN 912 - 8.8
4	0026-1640-030	1		Centering disc
5	0006-4404-010	1		Cup spring
6	3050-3375-010	1		Bearing cover
7	0019-6938-150	3		Hex head screw M 10x35 DIN 933 - 8.8
8	0004-1850-740	2		Gasket 99/140x1
9	1166-3131-000	2		Bearing housing
10	2265-3449-000	1		Worm wheel assembly with clamp plates
10a	1166-3447-000	1	**	Clamp plate, toothed
10b	1166-3446-000	1	**	Clamp plate
10c	0019-6525-150	4	**	Hex head screw M 10x110 DIN 931 - 8.8
-	1166-3368-020	1		Brake pulley assembly (11a-d)
11a	0019-6144-150	6		Allen screw M 10x25 DIN 912 - 8.8
11b	0026-1337-190	6		Lock washer A10 DIN 127
11c	1166-3371-030	1		Brake pulley
11d	3170-3371-000	1		Brake ring
12	0026-0405-030	1		Disc
13	0019-6150-150	2		Allen screw M 10x55 DIN 912 - 8.8
14	0019-9063-150	2		Threaded pin AM 8x10 DIN 916 - 10.9
-	3170-1043-000	2		Brake assembly (15a-f)
15a	0021-3514-300	2		Brake handle
15b	3170-1031-000	2		Brake bolt (with lining)
15c	0021-3537-300	2		Brake housing
15d	0006-4208-160	2		Cylindrical pressure spring
15f	0021-4096-850	2		Brake lining
-	0026-1263-550	8		Countersunk rivet
16	0026-1353-400	4		Washer
17	3170-1065-010	1		Cover
18	0019-6608-400	4		Hex head screw M 16x60 DIN 931
19	0019-6512-150	3		Hex head screw M 10x40 DIN 931 - 8.8
20	0004-1956-830	2		Felt ring 45 DIN 5419
21	3170-3375-000	1		Bearing cover
22	0004-1822-740	1		Gasket 90/140x1
23	0013-0448-090	1		Grooved nut M 50x1.5 SKF/KM 10
24	0011-6210-000	1		Grooved ball bearing 6210 DIN 625
25	1166-3400-000	1		Worm wheel shaft
26	0011-6210-000	1		Grooved ball bearing 6210 DIN 625
27	0004-1822-740	1		Gasket 90/140x1
29	see page 16/1	1		Fluid clutch (see fig. 16)
30	0019-8984-150	1		Threaded pin M 10x25 DIN 914 - 10.9
31	3158-3389-L	1		Cam hub
32	3158-3282-000	1		Cam ring
38	0004-1957-830	2		Felt ring 50 DIN 5419
39	1168-1192-000	1		Bracket
40	0005-0964-000	1		Proximity switch

* When ordering a motor, be sure to state voltage and frequency.

** This part is included in worm wheel assembly with clamp plates, item 10, but it is also available as separate item.
When the worm wheel needs replacement, the worm 5k, fig. 14, should be replaced as well (see section 8.5, No. 4).

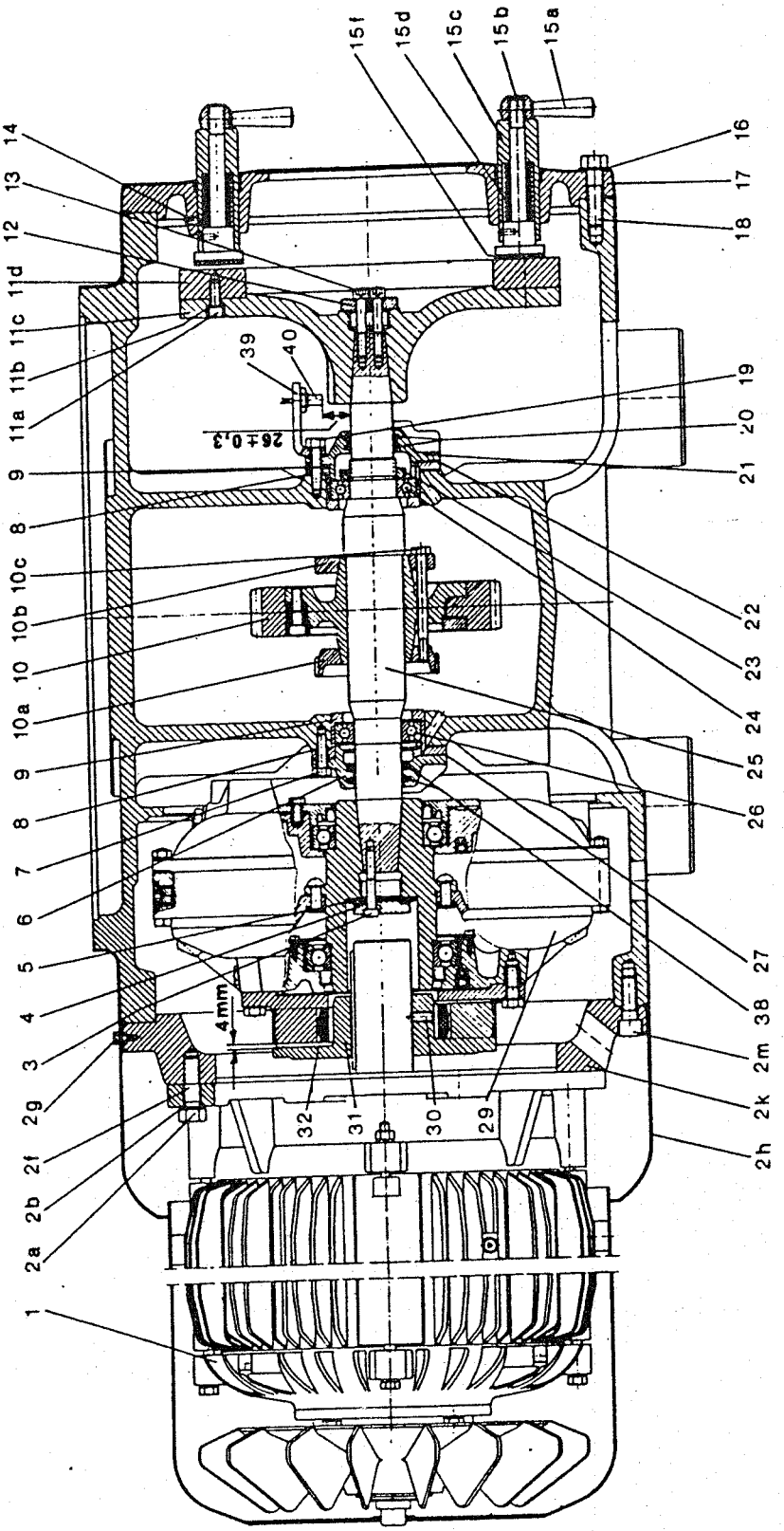
15f
15d
15c
15b
15a
14
13
12
11d
11c
11b
11a
9
8
10c
10b
10
10a
9
8
7
6
5
4
3
2g
2f
2b
2a
1
16
17
18
19
20
21
22
23
24
25
26
27
38
2m
2k
2h
39
40
26+0,3
4mm
32
31
30
29

Fig. 15

On special order only.

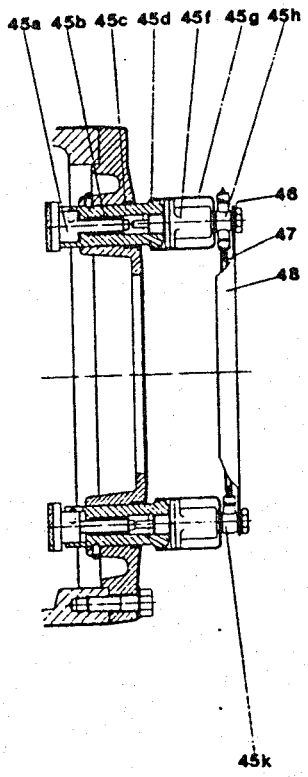

Fig. 15/1

No. in Fig.	Part - No.	Qty.		Part description
45a	1166-1031-000	2		Brake bolt (with lining), complete
-	0021-4096-850	2	*	Brake lining
-	0026-1263-550	8	*	Countersunk rivet
45b	0006-4120-300	2		Cylindrical pressure spring
45c	0021-3555-300	2		Brake housing
45d	0007-2580-750	2		Gasket 42/2.5
45f	0021-3690-010	2		Compressed-air cylinder
45g	0026-2144-400	2		Cap
45h	0018-3740-640	1		T-type hose connection R 1/4"
45k	0018-3730-640	1		Angular hose connection R 1/4"
46	0004-2245-770	2		Gasket 15/21x0.25
47	0018-0585-848	1		Pipe
48	1166-1044-000	1		Protecting sheet

* This part is included in the previous complete part, but it can also be ordered separately.

No.in Fig.	Part - Number	Qty.		Part Description
-	1166-3280-000	1		Fluid clutch assembly (1-28)
1	-	1	*	Cam flange
2	0019-6971-150	8		Hex head screw M 12x35 DIN 933 - 8.8
3	0026-0772-170	8		Spring washer B 12 DIN 137
4	0004-2913-830	1		Sealing ring 105x130x13 BAFS
5	0026-0182-170	1		Spacer ring ANS 160/163x26
6	0011-6021-400	1		Grooved ball bearing 6021 M/C4 DIN 625
7	0019-6518-150	36		Hex head screw M 10x70 DIN 931 - 8.8
8	-	1	*	Clutch casing Ø 470
9	0004-2385-858	1		Packing cord Ø 1 mm, 1400 mm long
10	0026-0771-170	36		Spring washer B 10 DIN 137
11	0013-0279-150	36		Hexagon nut M 10 DIN 934 - 8
12	-	1	*	Primary wheel Ø 470
13	0026-0180-170	1		Spacer ring AN 140/143x24
14	0007-2944-830	1		Gasket 140/3
15	0011-6018-400	1		Grooved ball bearing 6018 M/C4 DIN 625
16	-	1	*	Secondary hub with secondary wheel Ø 425
17	0004-2912-830	1		Sealing ring 90x110 BASL
18	-	1	**	Sealing ring cover
19	0019-6903-150	8		Hex head screw M 8x20 DIN 933 - 8.8
20	0026-0770-170	8		Spring washer B8 DIN 137
21	0007-1741-280	2		Gasket DIN 7603 - A22x29
22	-	1	**	Plug M 22x1.5 x 20
23	0004-2131-280	1		Gasket DIN 7603 - A18x24
24	0019-1490-000	1		Threaded plug M 18x1.5x15
25	3158-3287-010	1		Oil control ring Ø 119/192 x 4.5
26	0019-2234-030	8		Fillister head screw AM 5x16 DIN 84 - 4.6
27	0026-0750-170	8		Lock washer 5 DIN 7980
28	0019-1551-090	1		Oil fill plug

* When this part needs replacement, the complete clutch must be returned to the factory for repair. Instead of the part-number, state the number in figure (first column).

** Instead of the part-number, state the number in figure (first column).

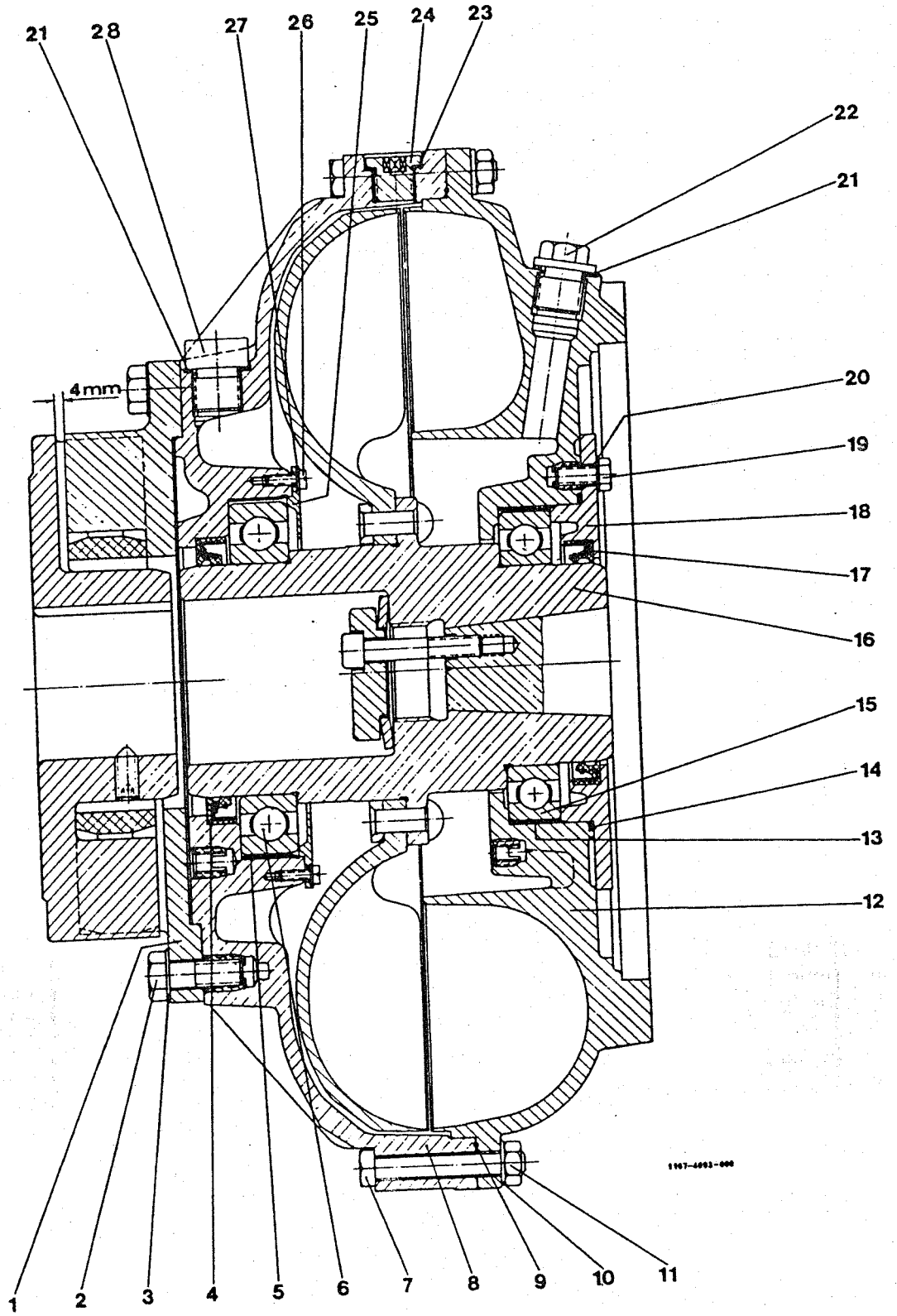
21
28
27
26
25
24
23
22
21
4mm
20
19
18
17
16
15
14
13
12
1
2
3
4
5
6
7
8
9
10
11

Fig. 16

No. in Fig.	Part - No.	Qty.		Part description
-	8134-2100-330	1		Operating-water connection with protecting case (1-27 and 36-41)
1	0013-2842-300	1		Grooved coupling nut F25 DIN 11851
2	0018-3939-300	1		Cone connection D25 DIN 11851
3	0007-2208-750	4		Gasket G25 DIN 11851
-	8134-2201-010	1		Pipe line, complete (4a-d)
4a	0018-4502-400	1		Threaded connection 25 / R 1"
4b	0018-2525-640	1		Strainer R 1"
4c	0018-1609-300	1		Bend
4d	0013-2842-300	1		Grooved coupling nut F25 DIN 11851
5	0018-4086-400	3		Threaded connection 25 / R 1"
6	0018-1741-000	1		Water pressure reducer, complete (6a-d)
6a		2	*	Gasket
6b		2	*	Threaded connection
6c		2	*	Coupling nut
6d	0001-0299-610	2	*	Pressure gauge
7	3014-2166-000	1		Connection pipe
8	0019-0137-300	1		Hex head screw R 1/4"x12
9	0004-5268-880	2		Gasket 13/19x1.5
10	8134-2195-000	1		Connection piece
11	0018-0961-300	2		Double nipple 3/8"
12	0018-3711-600	2		Solenoid valve 3/8"
15	0018-3854-300	4		Connection piece 10 / R 3/8"
16	0013-2818-400	4		Coupling nut R 3/4"
17	0007-2230-750	4		Gasket 15.5/21.5x4
18	0018-4645-300	2		Threaded connection R 3/4" / R 3/8"
19	0018-4646-300	2		Threaded connection R 3/4" / R 1/2"
20	0018-1709-640	2		Ball valve 13
21	0018-1788-300	2		Reducing nipple 1/2" / 3/8"
22	8134-2201-060	1		Pipe line
23	0007-2402-750	2		Gasket 17/23x3
24	0018-4645-300	1		Threaded connection R 3/4" / R 3/8"
25	8134-2193-120	1		Connection piece
26	0018-1299-640	2		Upper part of valve 1/2" DIN 3519, cpl.
26a	0004-5276-710	2	*	Gasket 22/26x1
27	0001-0299-610	2		Pressure gauge
-	8134-2355-020	1		Protecting case
-	0005-3355-630	1		Cable gland Pg 9
-	1165-2350-000	1		Pressure switch assembly (30-31)
30	0018-1870-000	1		Low-pressure hose, complete
30a	0018-3465-400	1	*	Screw coupling DL 8 DIN 2353 R 1/4"
30b	0018-3560-400	1	*	Screw coupling DL 8 R 3/8"
31	0005-0675-900	1		Pressure switch F 5
36	0005-3358-630	1		Cable gland Pg 9
37	0019-2376-630	2		Fillister head screw AM 4x16 DIN 84
38	0005-0862-900	1		Branch box
39	0005-0222-630	1		Plug Pg 9 DIN 46320
40	0005-0203-630	1		Cable gland C4 Pg 11x6-9 DIN 46320
41	0005-0772-608	1		Protecting hose

* This part is included in the preceding "complete" part, but it is also available as separate item.

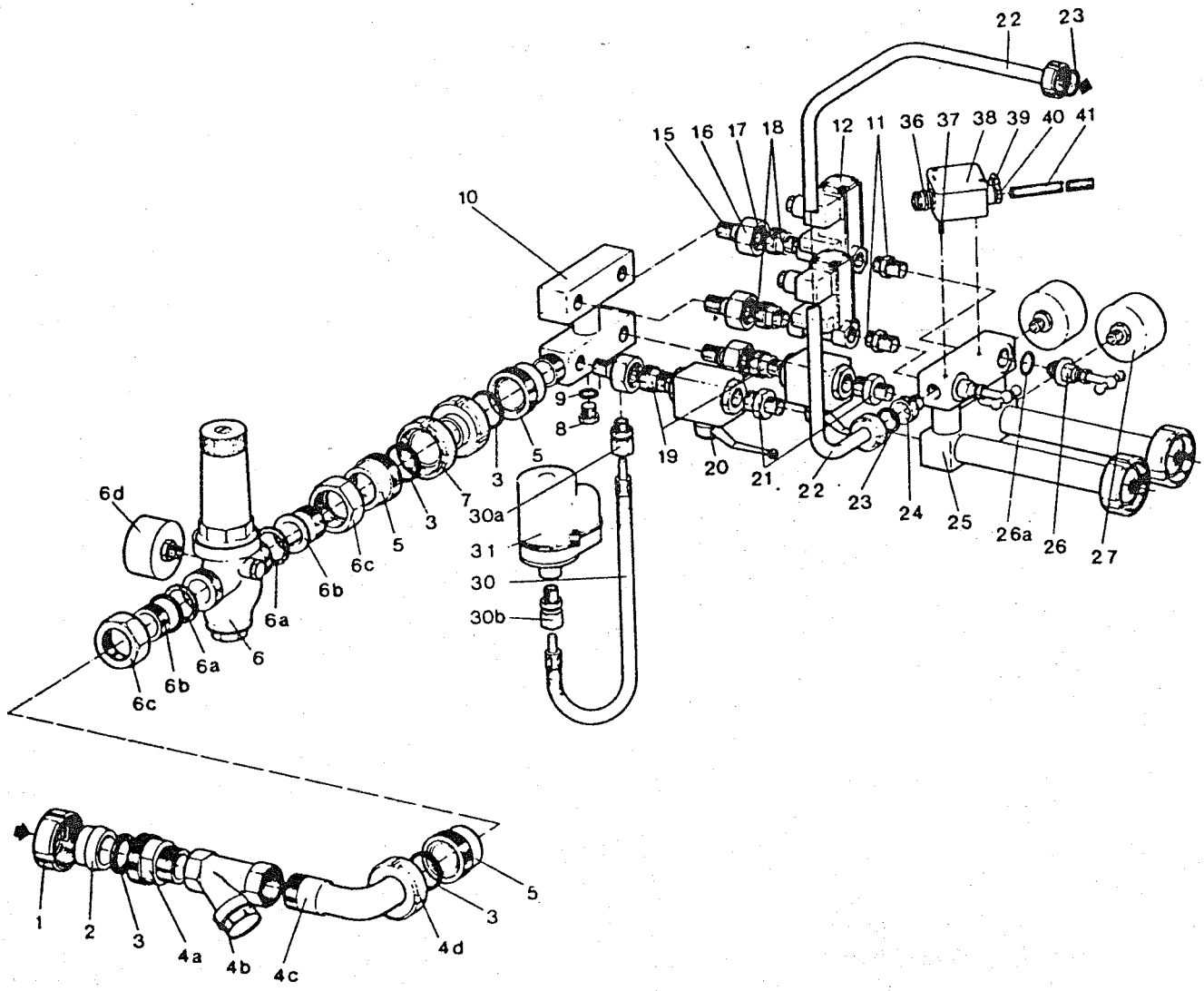
22
23
15
16
17
18
12
11
36
37
38
39
40
41
10
9
8
19
20
21
22
23
24
25
26a
26
27
3
5
7
30a
31
30
30b
6d
6c
6b
6a
6
1
2
3
4a
4b
4c
4d

Fig. 17/1

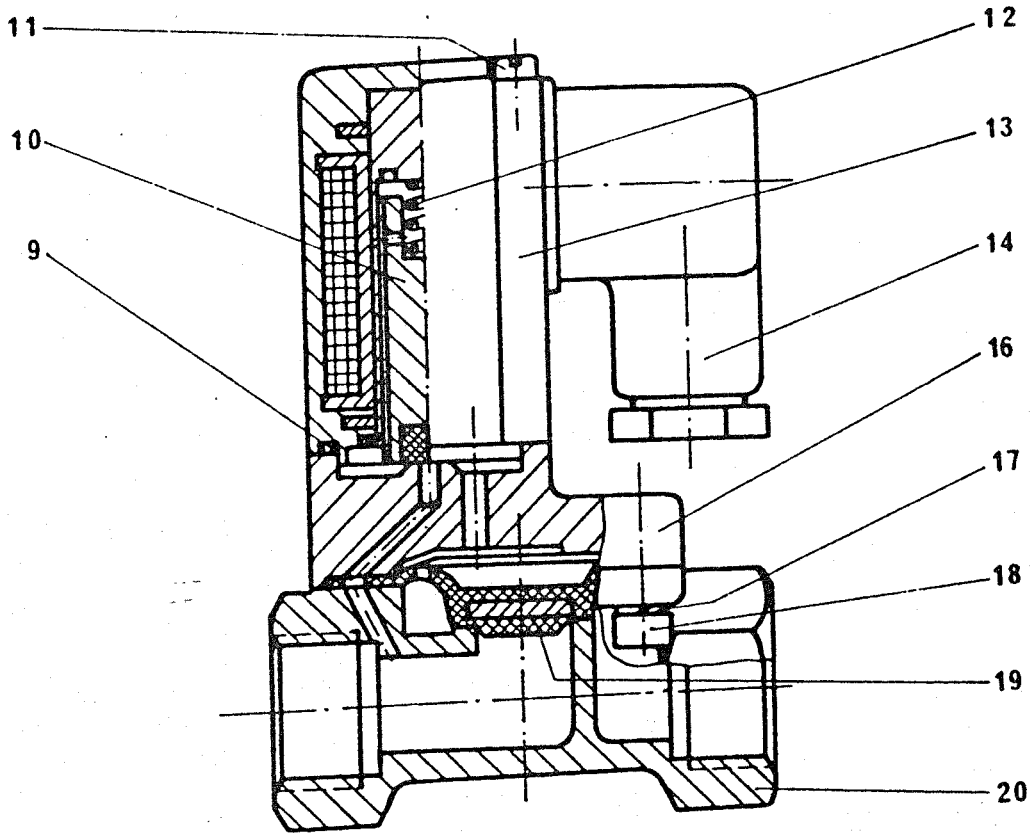

Fig. 17/2

No.in Fig.	Part - Number	Qty.	Part Description
-	0018-3711-600	1	Solenoid valve, complete (9-20)
9	0007-1946-750	1	Gasket 25x1.5
10	0018-3710-040	1	Solenoid core
11	0019-2387-030	4	Cylindrical screw AM 4x55 DIN 84 - 4.6
12	0006-4079-160	1	Pressure spring
13	0018-3710-800	1	Solenoid head 50/60 Hz
14	0018-3710-050	1	Coupler socket
15			
16	0018-3711-070	1	Valve cover
17	0026-1322-170	6	Lock washer A4 DIN 127
18	0019-6077-400	6	Allen screw M 4x10 DIN 912
19	0018-3711-750	1	Diaphragm
20	0018-3711-080	1	Valve housing

Maximum throughput rate: 7.000 l/h

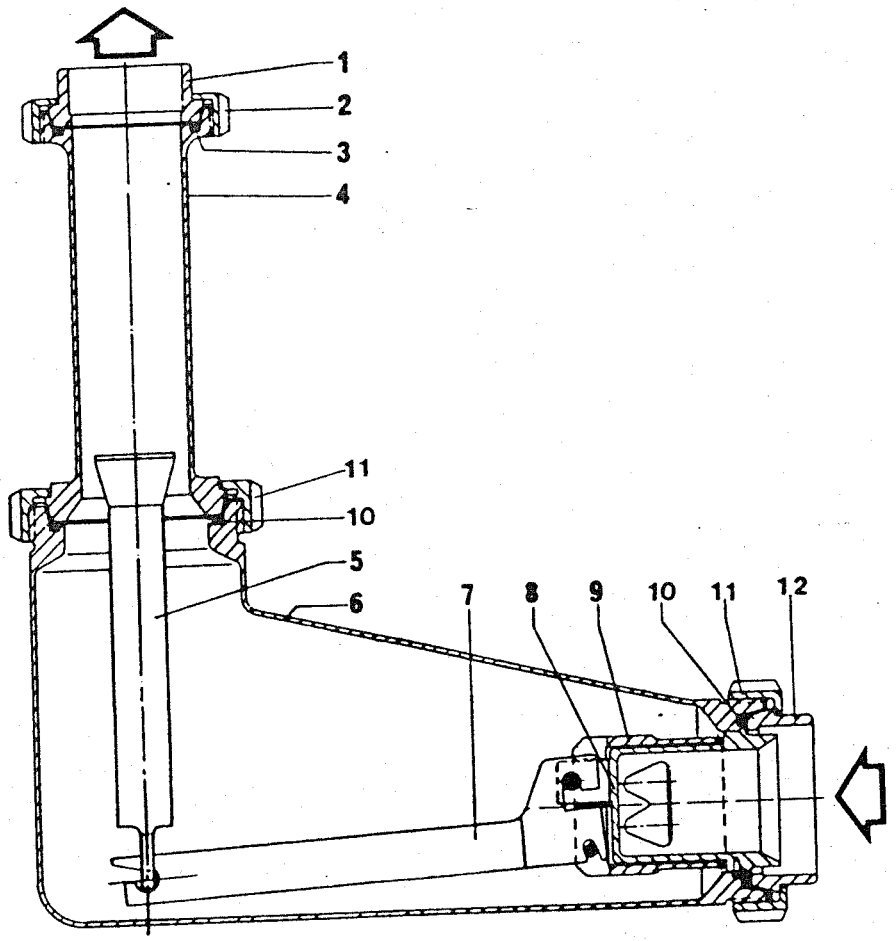

Fig. 18/1

NOTE: Be sure to install the flow constrictor in such a manner that the inlet is fitted to a horizontal piece of pipe and the control tube 4 is directed vertically upwards.

No.in Fig.	Part - No.	Qty.		Part Description
-	8250-2070-090	1		Flow constrictor, complete (1-12)
1	0018-3955-300	1		Cone connection D50 DIN 11851
2	0013-2845-300	1		Grooved coupling nut F50 DIN 11851
3	0007-2211-750	1		Gasket G50 DIN 11851
4	-	1	*	Control tube
5	-	1	*	Float
6	-	1	*	Housing
7	-	1	*	Throttling lever
8	-	1	*	Throttling housing
9	-	1	*	Regulating piece
10	0007-2212-750	2		Gasket G65 DIN 11851
11	0013-2846-300	2		Grooved coupling nut F65 DIN 11851
12	0018-4636-400	1		Reducing cone connection 65/50

* This part can only be replaced by one of our factory engineers or by a special repair shop authorized by us, because its replacement requires re-adjustment of the flow constrictor. Therefore, when ordering this part, the flow constrictor must be returned to the factory.

No.in Fig.	Part - No.		Qty.	Part Description
-	1176-2213-030		1	Double centripetal pump, complete (1a-k)
1a	1176-2246-000		1	Feed tube
1b	0007-2501-750		2	Gasket 23/3
1c	1176-2241-000		1	Lower centripetal pump, dia. 105 (up to 5 bar max.)
1d	0007-2925-750		1	Gasket 36.2/3
1f	1176-2252-020		1	Upper centripetal pump, dia. 105 (up to 5 bar max.)
1g	0007-2730-750		1	Gasket 46.2/3
1h	0007-1900-750		3	Gasket 31/2.5
1k	0007-2210-750		1	Gasket G40 DIN 11851
-	1176-2296-000		1	Feed and discharge connections, complete (2-10f)
2	1176-2217-000		1	Ring
3	1176-2301-000		1	Feed and discharge housing
4	0007-2210-750		2	Gasket G40 DIN 11851
5	0007-2208-750		1	Gasket G25 DIN 11851
7	8918-2100-080		1	Pressure gauge
8	see special IM		1	Constant-pressure valve
	Measuring range:			
	50 - 350 l/h	200 - 1,400 l/h		
-	8020-2040-080	8020-2240-050	1	Flowmeter, complete (9a-10f)
9a	0019-1732-400	0019-1732-400	1	Handle screw
9b	0007-2298-750	0007-2298-750	2	Gasket 13.5/22x10
9c	0019-2478-300	0019-2478-300	2	Cheese head screw M 4x8 DIN 85
9d	0004-5261-720	0004-5261-720	2	Gasket 4.8/9.0x1
9e	8020-2017-000	8020-2217-000	1	Scale
9f	8020-2002-030	8020-2002-030	1	Intermediate piece
9g	0001-0083-820	0001-0083-820	1	Cylindrical sight glass
9h	0019-1380-300	0019-1380-300	1	Threaded sleeve
9k	0026-1375-300	0026-1375-300	1	Washer
9m	0013-3010-300	0013-3010-300	1	Nut M 35x1.5
9n	8020-2003-170	8020-2003-170	1	Outlet pipe
9p	0019-0170-400	0019-0170-400	2	Hex head screw M 12x17.5
9q	0007-2209-750	0007-2209-750	1	Gasket G32 DIN 11851
9r	8020-2001-110	8020-2001-110	1	Inlet cup
9s	8020-2006-010	8020-2206-010	1	Measuring tube
9t	8020-2012-000	8020-2012-000	1	Float
9u	8020-2004-030	8020-2004-030	1	Clamp
9v	0019-0002-300	0019-0002-300	1	Handle screw
9w	0007-2208-750	0007-2208-750	1	Gasket G25 DIN 11851
9x	0007-2285-750	0007-2285-750	2	Gasket 22/32x5
9y	0026-5508-300	0026-5508-300	1	Washer
9z	0026-1445-300	0026-1445-300	1	Snap ring
-	1072-2273-020	1072-2273-020	1	Stuffing box, complete (10a-f)
10a	1072-2279-020	1072-2279-020	1	Round-slide valve
10b	0019-1590-610	0019-1590-610	1	Threaded bolt
10c	1072-2284-000	1072-2284-000	1	Stuffing box housing
10d	0026-1062-400	0026-1062-400	1	Cylindrical pin
10f	0021-3096-300	0021-3096-300	1	Handle screw
11	0018-3939-300		1	Cone connection D25 DIN 11851
12	0013-2842-300		1	Grooved coupling nut F25 DIN 11851
13	0013-2844-300		2	Grooved coupling nut F40 DIN 11851
14	0018-3949-300		2	Cone connection D40 DIN 11851

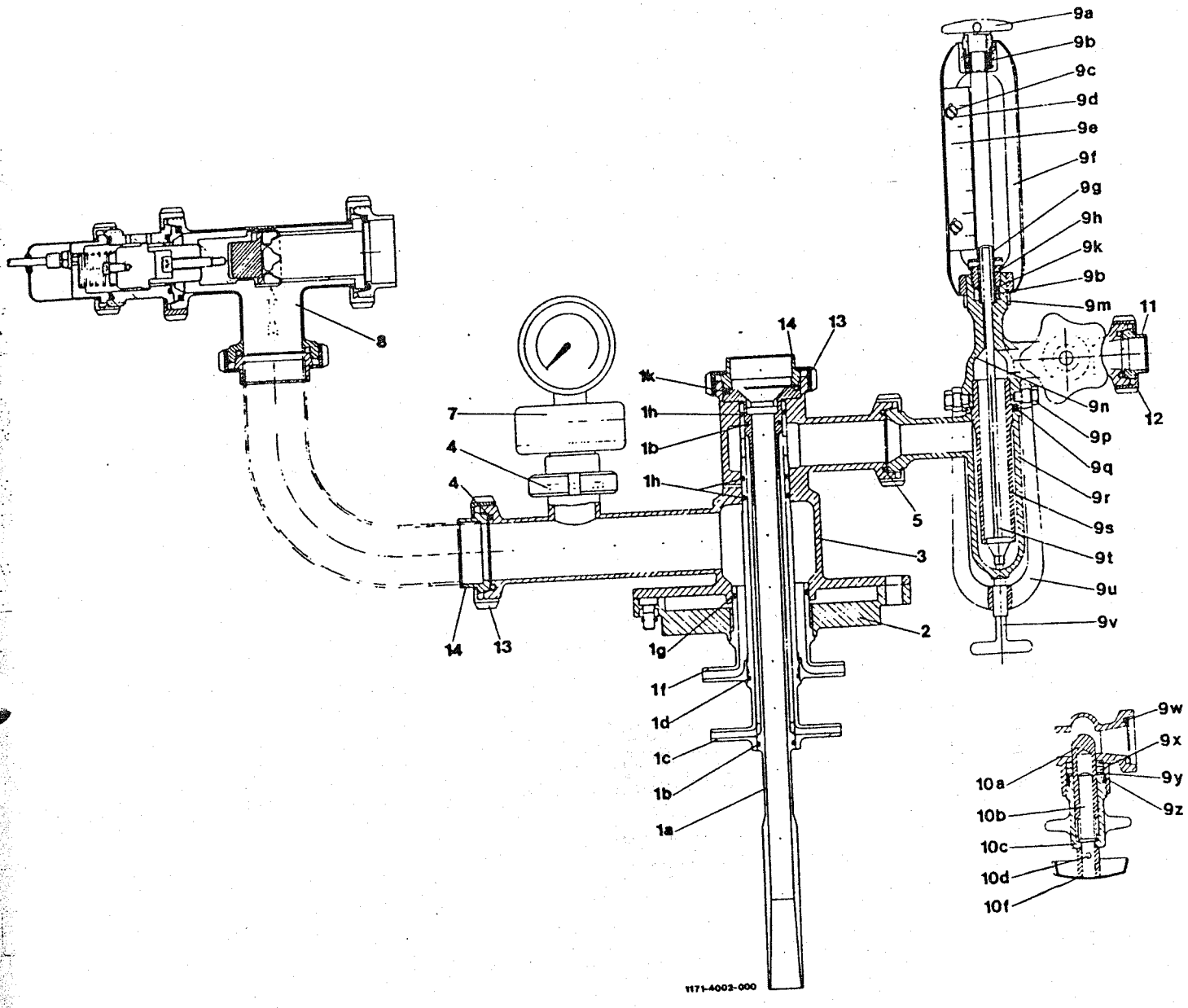
9a
9b
9c
9d
9e
9f
9g
9h
9k
9b
9m
11
12
9n
9p
9q
9r
9s
9t
9u
9v
8
7
4
4
14
13
1k
1h
1b
1h
5
3
2
1g
1f
1d
1c
1b
1a
14
13
9w
9x
9y
9z
10a
10b
10c
10d
10f
1171-4002-000

Fig. 18/2

No.in Fig.	Part - No.	Qty.		Part Description
-	1176-6600-000	1		Bowl, complete (1-28)
1	0019-1450-400	1		Threaded plug
2	0007-1970-840	1		Gasket 26.5/35x5.25
3	1169-6280-010	1		Valve assembly (3a-f)
3a	1169-6281-010	1		Valve housing
3b	0007-2920-750	3		Gasket 23.3/2.4
3c	0004-2341-840	1		Gasket 6/9.9x10.5
3d	0007-2923-750	2		Gasket 9.3/2.4
3f	1169-6276-000	1		Valve piston
4	1169-6501-000	1	*	Sliding piston
5	0007-2478-750	1		Gasket 445/465x10
7	1169-6604-030	1	*	Bowl bottom, complete
7a	3117-6609-010	1	**	Arresting piece
7b	0019-2233-400	1	**	Cheese head screw AM 5x12 DIN 84
8	1169-6631-010	1	*	Bowl lock ring
-	1176-6660-000	1	*	Set of discs (9a-c)
9a	1066-6662-040	1		Bottom disc
9b	1066-6663-060	4		Disc
9c	1066-6663-120	126		Disc
9h	1033-6670-010	1		Upper disc (specially shaped)
10	0007-2079-750	1		Gasket 100/10
11	1169-6620-000	1	*	Distributor
14	0007-2631-750	1		Gasket 440/4
15	0007-2967-840	1		Gasket 416.8x10
16	0019-1935-400	1		Threaded sleeve Tr 44x3
17	0007-1944-750	1		Gasket 44.2x3
18	0007-2392-750	1		Gasket 19.2x3
19	0019-0441-420	1		Spindle screw M 18x1.5
20	1169-6610-010	1	*	Bowl top
21	1033-6650-000	1		Separating disc
22	1176-6642-000	1		Centripetal pump chamber cover
23	0007-2133-750	1		Gasket 140/152x4
24	1072-6631-080	1		Lock ring
25	1169-6597-000	1		Ring
26	0007-2640-750	1		Gasket 150/3
27	0007-2555-750	1		Gasket 179/3
28	0019-6126-400	4		Allen screw M 8x35 DIN 912

* This part can only be replaced by a WESTFALIA service engineer or by a special repair shop authorized by WESTFALIA, because of special re-fitting to machine and possible re-balancing of bowl.

* This part is included in the preceding "complete" part, but it is also available as separate item.

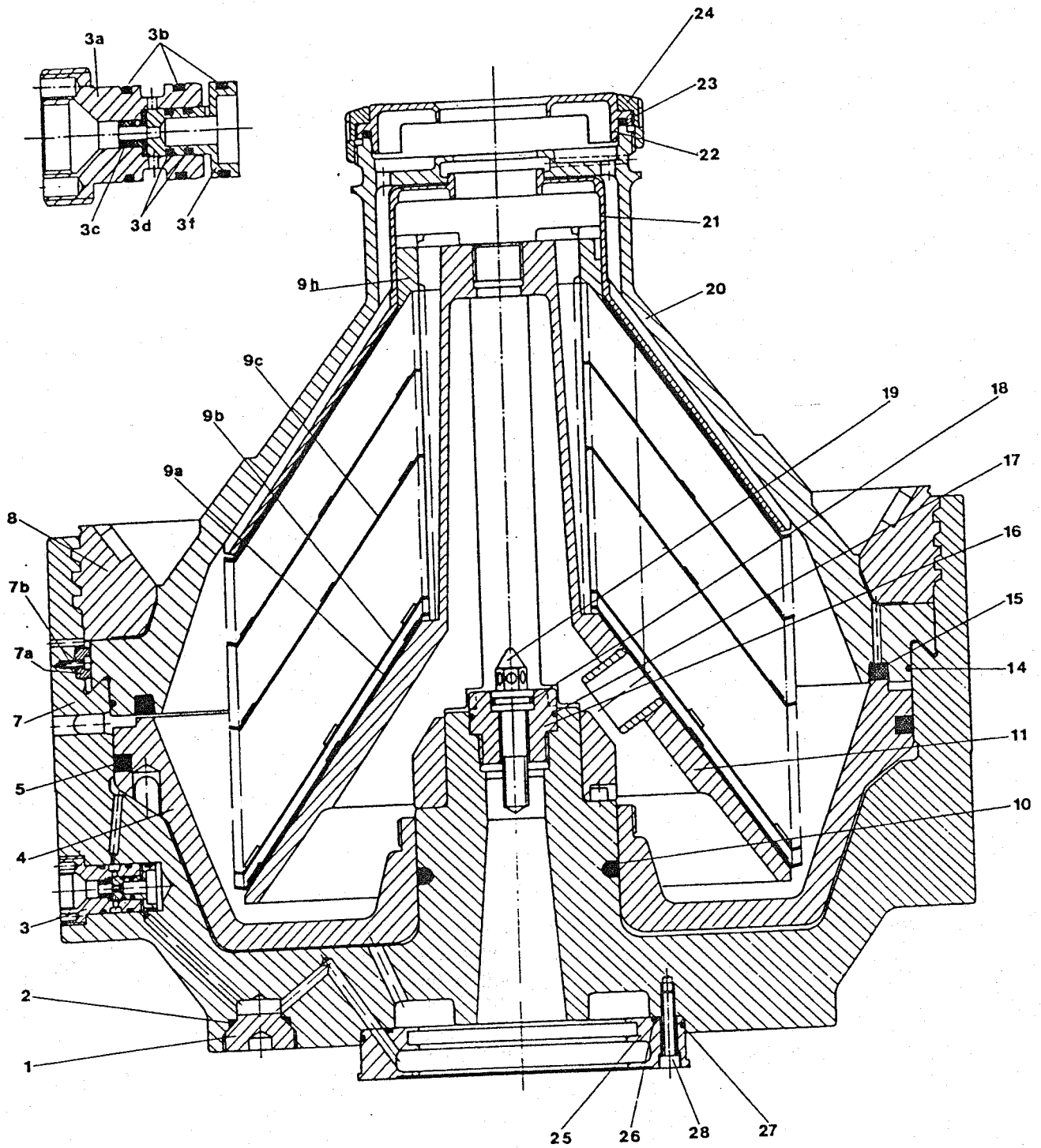
3a
3b
3c
3d
3f
24
23
22
21
9h
20
9c
9b
9a
19
18
17
8
16
7b
15
7a
14
7
11
5
10
4
3
2
1
25
26
28
27

Fig. 19

All the parts mentioned in the packing list furnished with the separator should be found in the packing case.

No. in Fig.	Part - No.	Qty.	Part description
401	0003-3774-320	1	Allen wrench 4 DIN 911
-	0003-3775-320	1	Allen wrench 5 DIN 911
-	0003-3776-320	1	Allen wrench 6 DIN 911
-	0003-3777-320	1	Allen wrench 8 DIN 911
-	0003-3778-320	1	Allen wrench 10 DIN 911
-	0003-3780-320	1	Allen wrench 14 DIN 911
403	0003-4202-320	1	Double-ended wrench 10x13 DIN 3110
-	0003-4205-320	1	Double-ended wrench 17x19 DIN 3110
-	0003-4208-320	1	Double-ended wrench 22x27 DIN 3110
-	0003-4209-320	1	Double-ended wrench 24x30 DIN 3110
-	0003-4211-320	1	Double-ended wrench 27x32 DIN 3110
-	0003-4222-320	1	Double-ended wrench 36x41 DIN 3110
404	0003-3846-000	1	Pivoted hook wrench 90/155
405	0003-0200-000	1	Mallet
406	0003-0303-000	1	Splash cover
407	0003-0256-890	1	Oil gun
408	0003-0168-890	1	Funnel
409	0003-0277-800	1	Oil cup
410	0003-4173-030	1	Socket wrench 46,5 (for threaded sleeve in bowl bottom)
411	0003-0485-320	1	Wrench 17x19 DIN 838 (for spindle screw)
414	1171-9910-000	1	Pulling device (for cam hub, fluid clutch)
415	0018-3430-030	1	Pipe M 22x1.5x200 (for fluid clutch)
416	0003-0590-000	1	Torque wrench 20 - 150 Nm
416a	0003-0615-000	1	Extension B 12.7x250 DIN 3123
417	0003-0601-320	1	Hexagon socket 8
418	2265-9886-000	1	Lifting device for spindle
419	1166-9910-010	1	Puller (for fluid clutch and brake pulley)
420	0003-4636-050	1	Screwdriver 5x125
-	0003-4637-050	1	Screwdriver 8x150
421	0003-4534-100	1	Wrench (for centripetal pump)
425	0003-3003-000	1	Wrench (for large lock ring)
426	0003-3992-000	1	Annular wrench (for small lock ring)
427	1169-9840-000	1	Lifting device (for bowl top)
428	1169-9960-000	1	Jack (for sliding piston)
428a	1169-9805-000	1	Pressure piece (included in item 428)
429	0003-4149-030	1	Wrench (for feed tube)
430	1176-9820-000	1	Disc stack compressing device (430a-d)
430a	1176-9851-000	1	Threaded ring
430b	1167-9770-000	1	Hydraulic unit
430c	1176-9939-000	1	Disc
430d	1176-9877-000	1	Bolt
431	0003-0065-030	1	Lifting device (for wrench with lock ring)
432	0003-0575-000	1	Pin punch C5 DIN 6450
434	1169-9970-000	1	Lifting device
435	1175-9839-000	1	Lifting device (for hood)
436	1169-9930-010	1	Jack (for bowl bottom)
437	0003-3727-030	1	Wrench M4 (for valve piston)
438	1169-9895-000	1	Wrench (for bowl valve)
439	1168-9823-000	1	Adjusting ring
440	0003-3466-170	1	Lifting tongs (for bowl top)
-	0015-0014-080	5	2.5-litre can of separator lubricating oil CLP 220
-	0015-0050-090	2	5-litre can of clutch oil TDL 32
-	0015-0113-010	2	Tube of special grease (for bowl threads)
-	0015-0121-000	1	0.85-kg can of ball and roller bearing grease DIN 51825 K3k

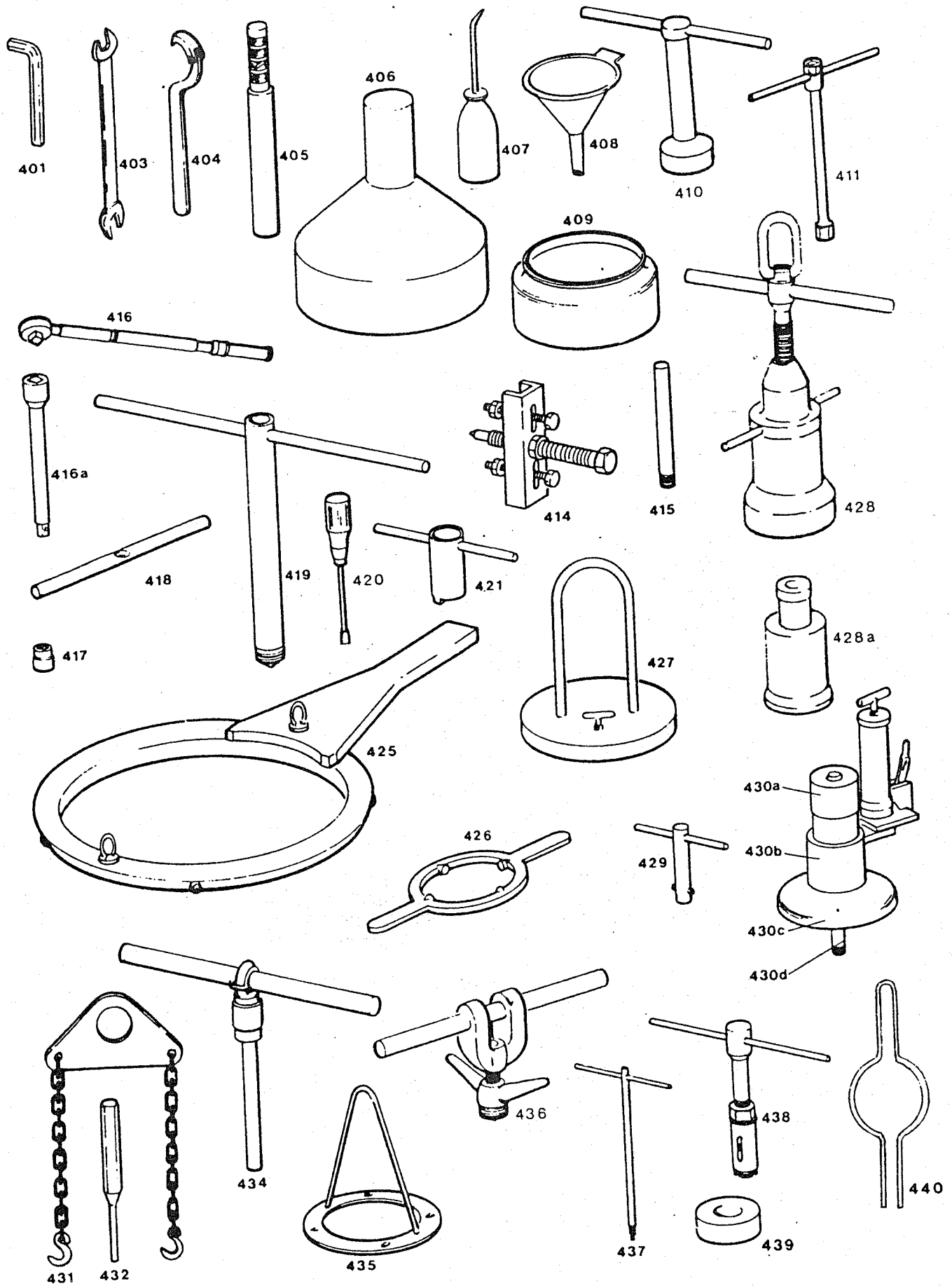
401
403
404
405
406
407
408
410
411
409
416
416a
414
415
428
418
419
420
421
417
427
428a
425
430a
430b
430c
430d
426
429
434
436
438
440
431
432
435
437
439

Fig. 20

(on special order)

No.in Fig.	Part - No.	Qty.	Part Description
-	1165-9200-040	1	Sterilizing tank assembly (1-31)
1	0013-2845-300	1	Grooved coupling nut F50 DIN 11851
2	0018-3955-300	1	Cone connection D50 DIN 11851
3	0007-2211-750	1	Gasket G50 DIN 11851
4	0013-2842-300	2	Grooved coupling nut F25 DIN 11851
5	0018-4269-400	1	Cone connection R 1/2"
6	0007-2208-750	2	Gasket G25 DIN 11851
7	0001-0675-400	1	Angle thermometer
8	1165-9462-000	1	Bush
9	1165-9210-030	1	Sterilizing tank
10	0026-1102-400	6	Cylindrical pin
11	0019-1363-300	6	Hinge screw
12	0021-3128-300	6	Handle screw
13	0007-2121-750	1	Gasket 118/130x7
14	0007-2483-750	1	Gasket 65/10
15	0006-4365-300	1	Cylindrical pressure spring
16	1169-9698-010	1	Funnel
17	1165-9277-000	1	Cap
18	0019-6966-400	3	Hex head screw M 12x20 DIN 933
19	0026-2108-400	1	Cap
20	0019-2507-300	1	Lens head screw M 6x10 DIN 85
21	0026-1324-300	1	Lock washer DIN 127 - B6
22	1165-9208-020	1	Cover
23	0007-2309-750	1	Gasket 92/112x10
24	0004-2364-758	1	Packing cord 8x8x2200
25	0001-0261-300	1	Blind cap
26	1165-9205-000	1	Flush pipe
27	0018-3949-300	1	Cone connection D40 DIN 11851
28	0007-2210-750	1	Gasket G40 DIN 11851
29	0013-2844-300	1	Grooved coupling nut F40 DIN 11851
30	0007-2209-750	1	Gasket G32 DIN 11851
31	0021-3155-700	3	Foot

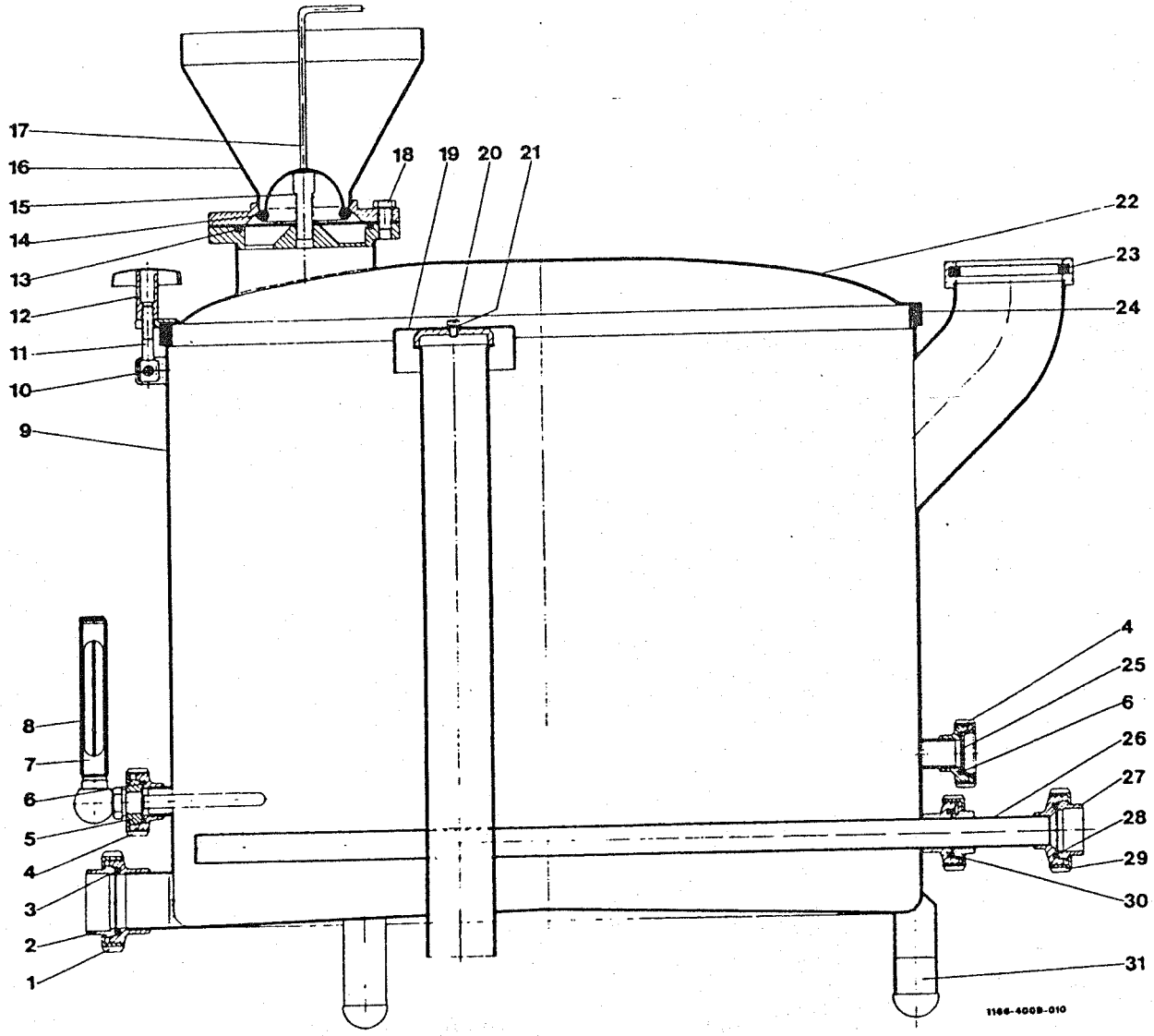
17
16
15
14
13
12
11
10
9
18
19
20
21
22
23
24
8
7
6
5
4
3
2
1
4
25
6
26
27
28
29
30
31
1166-4009-010

Fig. 21

Measuring range: 4000 - 14.000 litres/h

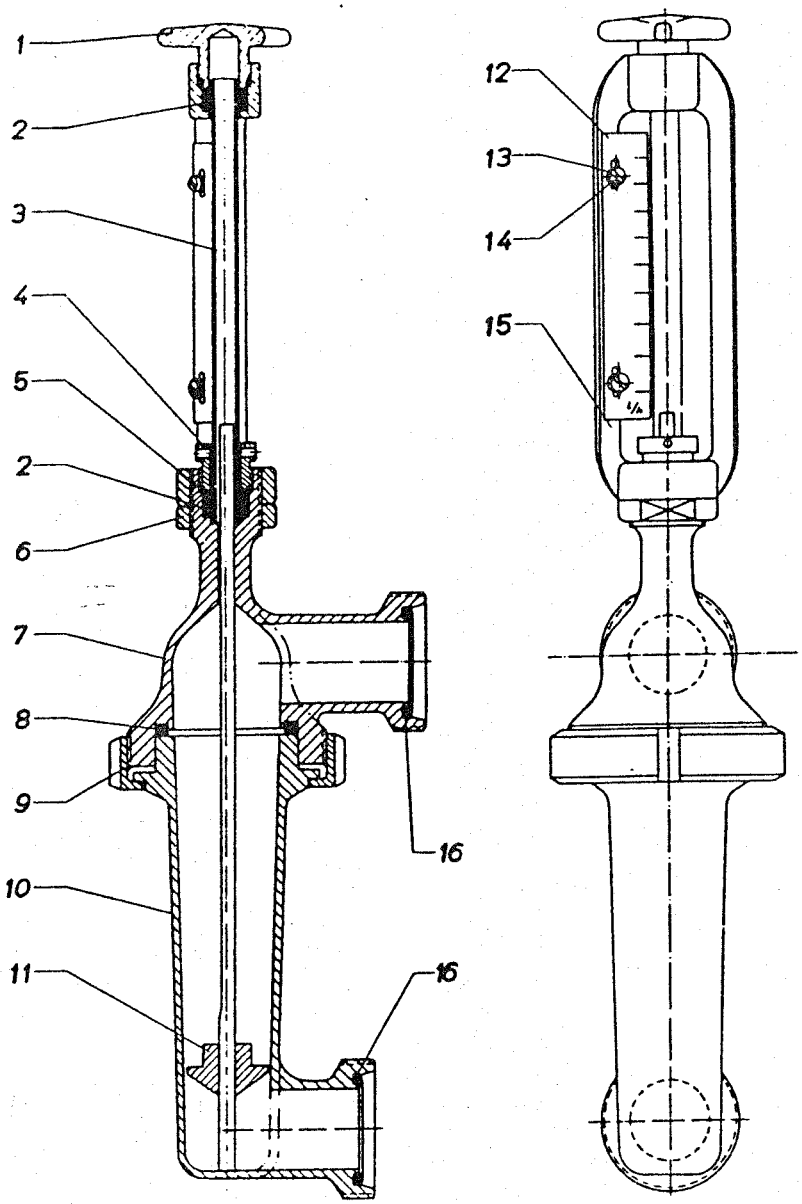

Fig. 22

No.in Fig.	Part - No.	Qty.	Part Description
-	8021-2200-000	1	Flowmeter, complete (1-16)
1	0019-1732-400	1	Handle screw
2	0007-2298-750	2	Gasket 13.5/22x10
3	0001-0083-820	1	Cylindrical sight glass
4	0019-1380-300	1	Threaded sleeve
5	0026-1375-300	1	Washer
6	0013-3010-300	1	Nut M 35x1.5
7	8021-2003-120	1	Outlet pipe
8	0007-2279-750	1	Gasket 56/68x6
9	0013-2846-300	1	Grooved coupling nut F65 DIN 11851
10	8021-2001-150	1	Inlet cup
11	8021-2212-000	1	Float
12	8021-2217-000	1	Scale 4,000 - 14,000 l/h
13	0004-5261-720	2	Gasket 4.5/9.0x1
14	0019-2478-300	2	Cheese head screw AM 4x8 DIN 85
15	8020-2002-000	1	Intermediate piece
16	0007-2210-750	2	Gasket G40 DIN 11851

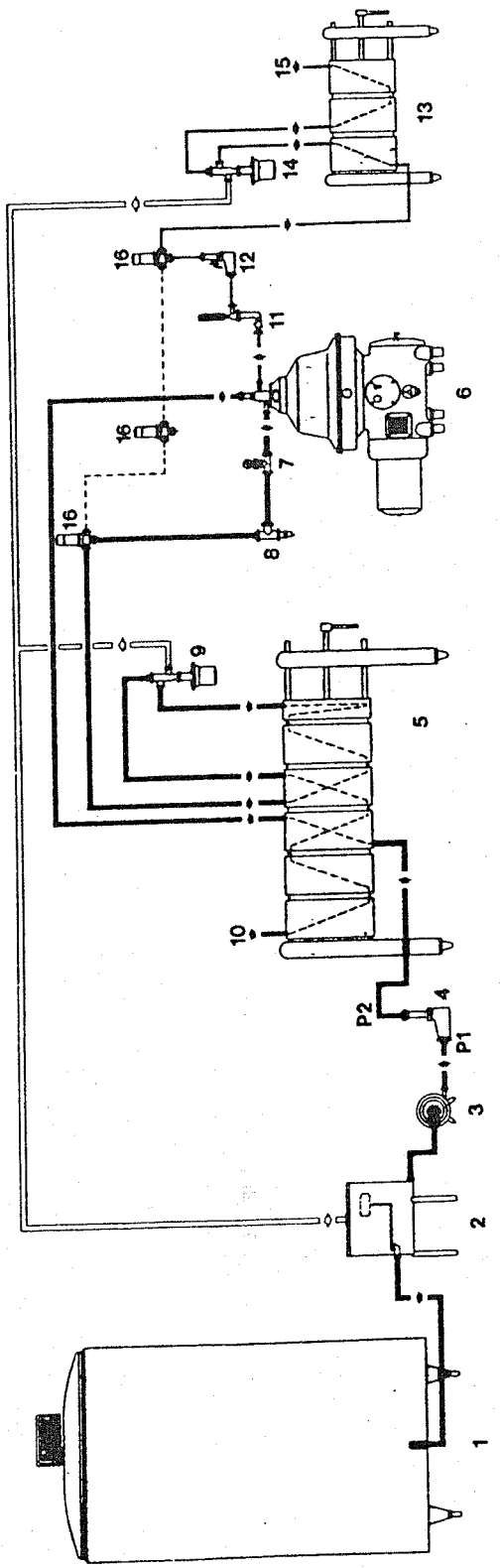

1 Storage tank
2 Balance tank with float valve, approx. 200 litres
3 Milk pump (capacity slightly larger than rated capacity of separator)
4 Flow constrictor $P_1 - P_2 = 0.5$ bar min., 2.0 bar max.
5 Heater and cooler
6 Separator
7 Pressure gauge
8 Constant pressure valve for adjusting the operating pressure
9 Flow diversion valve
10 Line to tank
11 Flowmeter with hand valve
12 Adjustable flow constrictor
13 Cream heater and cooler
14 Flow diversion valve
15 Line to cream tank
16 3-way valve

Note:
When installing the flow constrictor make sure its cylindrical part is in upright position so that the milk flows through it from below.