WCB
Ice Cream
An Alliance Company

Technical documentation

MF600 GA Freezer

Serial no.

698

WCB
Ice Cream
An Alliance Company

Technical documentation

MF600 GA Freezer - serial no. 698

Everything for ice cream.

Think what you could do...

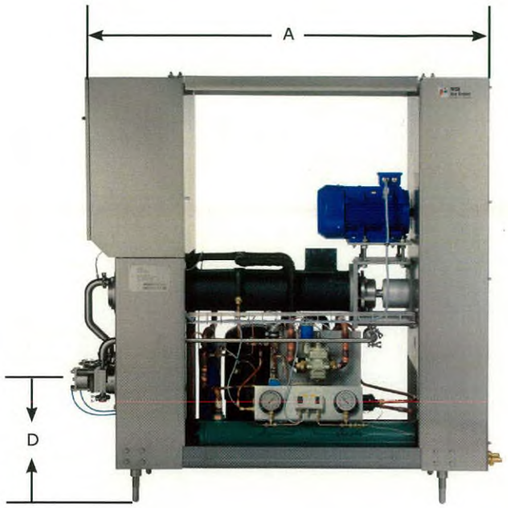

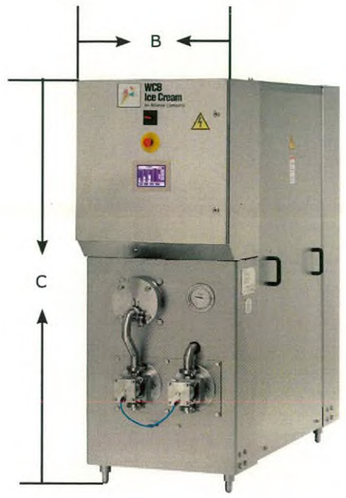

Dimensions	MF-600	MF-800	MF-1500
A - inch/mm	64/1618	73/1860	83/2309
B - inch/mm	28/710		28/900
C - inch/mm	75/1890		82/2093
D - inch/mm	20/520		11.5/294

Shipping data	MF-600	MF-800	MF-1500
Net weight - lbs/kg	2024/918	2866/1300	3300/2100
Gross weight - lbs/kg	2418/1097	3424/1553	3859/2350
FT3 (M3)	159/4.5	226/6.4	253/7.2

WCB Ice Cream must approve samples of product recipes, ingredients and packing materials. Our product technology being under continuous development, we reserve the right to amend the information given in this leaflet without prior notice.

WCB Ice Cream
An Alliance Company

WCB Ice Cream
267, Livingston Street
Northvale, NJ 07647
USA
Phone: +1 201 784 1101
Fax: +1 201 784 1116
E-mail: wcbice@wcbicecream.com
Homepage: www.wcbicecream.com

WCB Ice Cream
Graham Bells Vej 6
DK-8200 Aarhus N
Denmark
Phone: +45 8741 2000
Fax: +45 8741 2001
E-mail: wcbice@wcbicecream.dk
Homepage: www.wcbicecream.com

WCB Ice Cream
An Alliance Company
Think what you could do...

MF series ice cream freezer

Meeting tomorrow's challenges today

JØRGEN ØVESEN - CONTROL SYSTEM 00 45 232 55795
STEN CHRISTIANSEN - REFRIGERATION + MECHANICAL 00 45 874 12047

- **Operation interface for easier control and operation.**
- **Stainless steel frame, refrigeration jacket.**
- **Open design for easy cleaning and maintenance access.**
- **Easy to operate.**
- **Low maintenance costs.**

Processing principle

The WCB Ice Cream MF series ice cream freezer processes ice cream mix into the finished product via freezing, mixing and whipping operations.

The completely self-contained unit with integrated refrigeration is ready for use once mix, air, power and water connections are completed. It can also be used for scraped surface freezing of other products.

Operation principle

Mix is metered into the freezing cylinder by a rotary displacement pump. A constant flow of air is fed in simultaneously, and whipped into the mix as it moves through the cylinder. Frozen ice cream is scraped from the cylinder wall by stainless steel blades. A positive displacement pump is used at the outlet of the cylinder.

Removable panels facilitate access

Routine maintenance and cleaning are made easier and more convenient with the use of "easy-access" panels on both sides of the MF series freezers. Both sides can be totally removed.

WCB Ice Cream
An Alliance Company
Think what you could do...

DESCRIPTION	MF-600	MF-800	MF-1500
Pump drive - kW/HP	0.75/1	1.1/1.5	1.5/2
Mix inlet and ice cream outlet connection to CP pump	1.5/38	1.5/38	1.5/30
Dasher drive kW/HP	7.5/10	11/15	18.5/25
MIX CAPACITY:			
Minimum - maximum - US gallons per hour	13-80	20-105	20-200
Minimum - maximum - liters per hour	50-300	80-400	75-750
ICE CREAM CAPACITY @ 100% OVERRUN:			
Minimum - maximum - US gallons per hour	26-158	42-210	40-400
Minimum - maximum - liters per hour	100-600	160-800	150-1500
AIR REQUIREMENTS:			
nl/hour	400	500	850
Connections mm	ø8	ø8	ø8
AIR PRESSURE REGULATOR AND SANITARY FILTER ARE FACTORY SUPPLIED			
MAIN POWER REQUIREMENTS: Phase x voltage, cycles	3 x 400, 50 Hz	3 x 400, 50 Hz	3 x 400, 50 Hz
MINIMUM CLEARANCES AROUND FREEZER FOR SERVICING:			
Front (or according to local regulations) - inch/mm	43 (1100)	47/1190	44/1220
Sides - inch (mm)	17.7 (450)	17.7 (450)	18/460
Rear - (inch)	30 (760)	30 (760)	30/765

The maximum rated capacities listed in this table are based on the following:
Ice cream mix with 10.5% butterfat, 37.5% total solids, 15.5% sugar (of which 85% is sucrose) and 0.3% stabiliser entering the freezer at +40°F (4.4°C), and drawn at 23°F (-5°C). (Capacities may vary with other mix formulations).

FEATURES - OPTIONS	MANUAL	SEMI-AUTO	FULLY-AUTO
Stainless steel frame	Standard	Standard	Standard
CIP pump	Standard	Standard	Standard
Open type dasher, model	Standard	Standard	Standard
Closed type dasher, model	Optional	Optional	Optional
Variable frequency gear head - electric pump drive	Standard	Standard	Standard
Adjustable cylinder pressure	Standard	Standard	Standard
Automatic cylinder pressure control	Not available	Not available	Standard
TP pumps	Optional	Optional	Optional
CP pumps	Standard	Standard	Standard
Volumetric mix metering	Not available	Not available	Standard
Mix metering by positive displacement pump	Standard	Standard	Standard
Automatic metering of air by mass flow meter	Optional	Standard	Standard
Automatic viscosity control	Not available	Standard	Standard
Freeze-up protection	Standard	Standard	Standard
Stainless steel refrigerant jacket/accumulator	Standard	Standard	Standard
Refrigerant system with thermal expansion valve, back-pressure regulator, and solenoid valves	Standard	Standard	Standard
Safety lock-out switch on front	Standard	Standard	Standard
Mix flow display	Standard	Standard	Standard
Ice cream temperature display	Optional	Standard	Standard
Automatic start-up	Not available	Not available	Standard
Cycling of pump and dasher-CIP	Standard	Standard	Standard
Automatic ice cream outlet temperature control	Not available	Not available	Standard
Alarms and diagnostic messages	Standard	Standard	Standard
Link to automatic ingredient feeder	Not available	Not available	Standard
Bar graph display	Not avaiblable	Standard	Standard
Automatic overrun control	Not available	Standard	Standard

WCB Ice Cream
An Alliance Company
Think what you could do...

The MF series ice cream freezer is the leading example of why the industry relies on WCB Ice Cream for the most advanced solutions to their ice cream process needs.

The MF freezer is designed to assure efficient control of the process. A choice of manual, semi-automatic or fully-automatic models allows for selection of the level of control that fits the product demands.

All MF freezers are built according to the 3-A sanitary standards. Furthermore, the MF freezers comply with all European safety standards, and are CE-marked.

Consistent viscosity at any flow rate:

Semi-automatic and fully-automatic MF freezers feature the WCB proven Viscotrol. Viscotrol maintains constant ice cream viscosity, whether it is stiff and dry for extrusions or soft and flowable for mold filling. It helps maintaining an accurate filling, and controlling the extrusion portion.

Precise overrun control for repeatable profitability:

Superior overrun control is a major advantage common to all MF freezers. Variations are virtually eliminated through the use of a product discharge pump. This feature effectively isolates the freezer cylinder from high downstream pressures, often encountered in extrusion applications.

A metering system enables production of low and high overruns by metering both mix and air into the freezing cylinder. Mix metering is accomplished by maintaining a constant cylinder pressure.

The result is an accurate and repeatable control over a wide range of overrun settings, providing uniform freezing and consistent product delivery to the filler, extruder, or molder with precise control of mix and air metering.

Stainless steel construction for improved cleaning:

The MF freezer is designed to reduce maintenance and enhance cleaning. The extensive use of stainless steel for all frame components, side panels, doors and even the refrigeration jacket eliminates the need of periodic rust removal, repainting, and the possibility of bacteria entrapment.

Dasher choices:

It is easy to customize any of the MF freezers to suit the application. WCB Ice Cream offers a choice of two dashers suitable to all varieties of frozen product formulations, viscosities, textures and overruns. Both feature rugged stainless steel constructions, with hardened stainless steel scraper blades.

Open type dasher:

Used for most frozen desserts. Displaces approximately 30% of cylinder volume. The blade-carrying frame, designed for heavy duty use, diverts the product directly to the stationary beater for maximum intermixing and through air incorporation.

Closed dasher:

Optional dasher for special applications requiring stiff, dry appearing ice cream at a given temperature. Displaces approximately 80% of cylinder volume, resulting in rapid development of small and uniform ice crystals.

Not all ice cream formulations are compatible with the type 80 dasher.

Kindly consult WCB Ice Cream's specialists for these applications.

Fully automatic control

The 6" monochrome touch-screen operator interface is more robust and user-friendly, and has a much better contrast than an ordinary screen. Straightforward function keys make controls easier to understand. Less operator training is required. The system implies fewer errors causing delays in production and wasted products. Further information is available when touching the parameters on the screen. The new screens provide data on operating conditions and equipment status. In general, the operator spends significantly less time in front of the control panel, improving labour efficiencies.

The new automation includes a recipe menu that now records operating settings for up to 150 products. The benefits of this are a repeatable process for each product regardless of operator, and less waste at start-up due to the automation having correct initial settings.

Simplified on-line overrun calibration provides the operator with a better tool to maintain accurate package weight.

Preventive maintenance schedule display screens and alerts ensure timely maintenance of mechanical components. Display and record of faults and errors result in more efficient troubleshooting, thus less down time.

Airflow feedback from the air mass flow meter detects if there is a blockage in the overrun line. If airflow deviates from the expected norm, the control panel alerts the operator of this condition. This allows for faster troubleshooting and minimizes out-of-specification product.

Mimic screen displays a process schematic of the freezer operation. Shows status of pumps and valves, and displays process temperatures and pressures.

Link with automatic ingredient feeder improves accuracy of added ingredients, and can start and stop the ingredient feeder in unison with the freezer.

WCB Ice Cream
An Alliance Company
Think what you could do...

Choose the level of control you need from three basic designs:

Manual control:

The manual control design provides the most economical capital investment, while incorporating the same basis quality components as the other MF series freezer models.

- 6" touch-screen for easier operator control and operation.
- CP rotary lobe pumps with rubber-coated rotors and CIP by-pass covers.
- Dasher motor load.
- Cooling pressure.
- Cooling temperature.
- Regulation of pump speed.
- Start/stop push-buttons for main motor, pump motor and motor for cooling compressor.
- Regulation of viscosity.
- Supervision of dasher load and automatic shut-down, if load gets too high to protect freezer from freeze up.
- Softstart of dasher drive reduces load on belts and dasher assembly.

Option:

- Viking type TP rotary displacement pumps with CIP by-pass covers.

Semi-automatic control:

Includes controls for providing the optimum semi-automatic processing package. Contains all the features of the models with manual control, plus the following:

- Simplified display requires less operator training.
- Electronic control for overrun and viscosity.
- Semi-automatic production start-up.

Option:

- Viking type TP rotary displacement pumps with CIP by-pass covers.

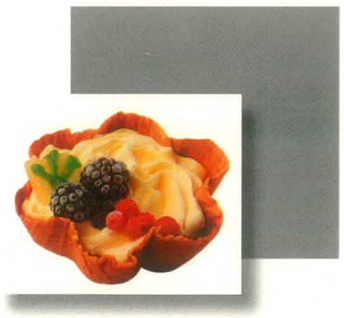

Fully-automatic control:

User-friendly control design incorporates all WCB's technology leadership. Contains features of the models with manual and semi-automatic controls, plus the following:

- Separate variable frequency pump drives.
- Secondary screens when touching the parameters on main screens.
- Storage increased to 150 product settings.
- On-screen function keys for automatic sequencing of start-up, shut-down and CIP.
- Scheduled preventive maintenance alerts.
- Display of production data, bar graphs and mimic screen.
- Both temperature and viscosity controls.

Option:

- Viking type TP rotary displacement pumps with CIP by-pass covers.
- Mix flow meter.

IF MACHINE SHOWS MIX PUMP FAILURE ON ALARM PANEL, OPEN FRONT AND CHECK 2 INVERTER CONTROLLERS ON RIGHT HAND SIDE (BOTH HAVE A DIGITAL DISPLAY) IF ONE DISPLAYS ERROR MESSAG - F0004 - THEN IT HAS TRIPPED.

TURN OFF AT MAINS PRESS BOTH UPPER/LOWER LEFT HAND BUTTONS ON FRONT OF INVERTER CONTROLLER - TURN BACK ON MAINS AND HOPEFULLY IT STARTS.

ROTAS

WHEN CHANGING ROTAS. 1ST PRIORITY IS INLET WHICH CAN THEN BE PUT INTO PRODUCTION PUMP.. THE PRODUCTION PUMP ROTAS CAN BE THEN USED IN RIPPLE FEEDER.

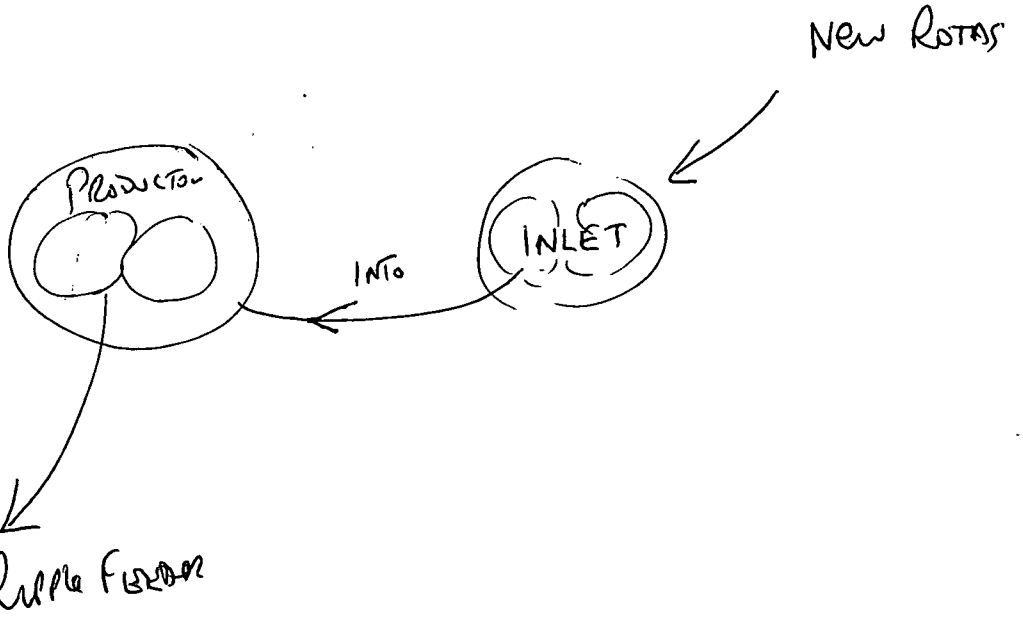

Factory Settings

Setting Product related Parameters

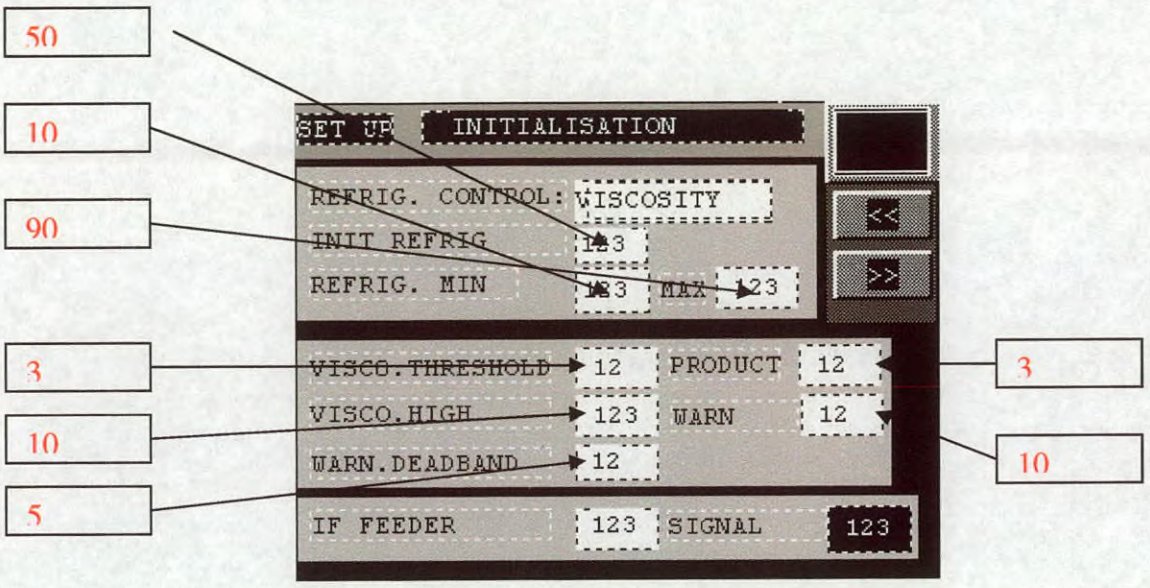

Setting Cream Function related Parameters – ignore these!

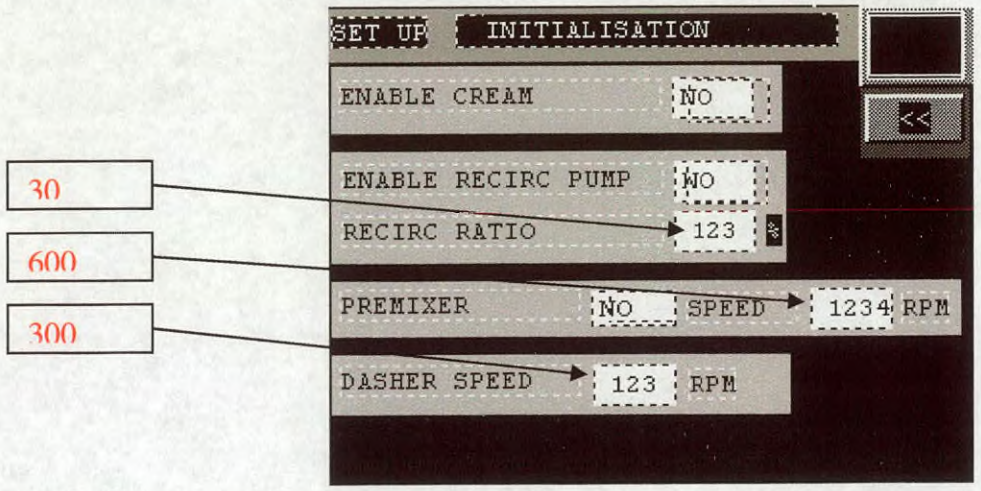

Setting CIP and Sanitize Parameters

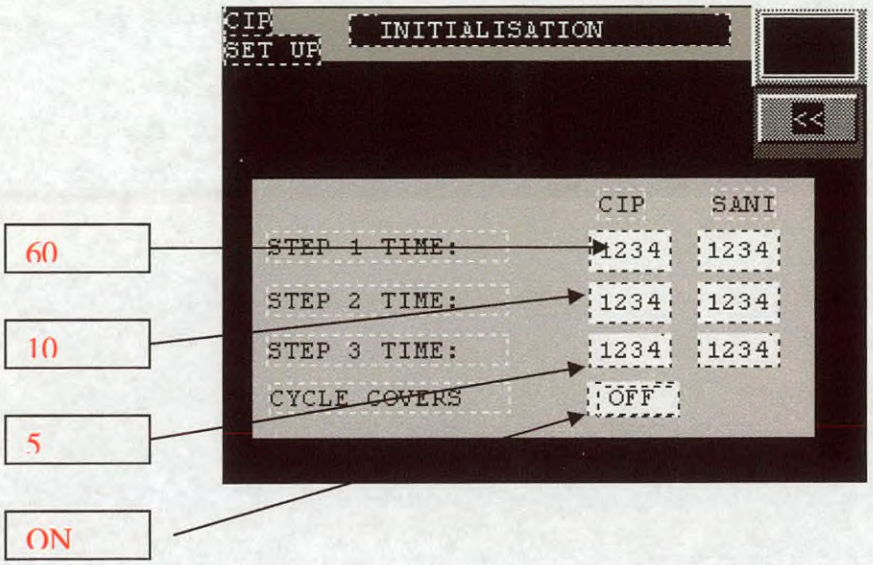

Mix Flow rate Tuning

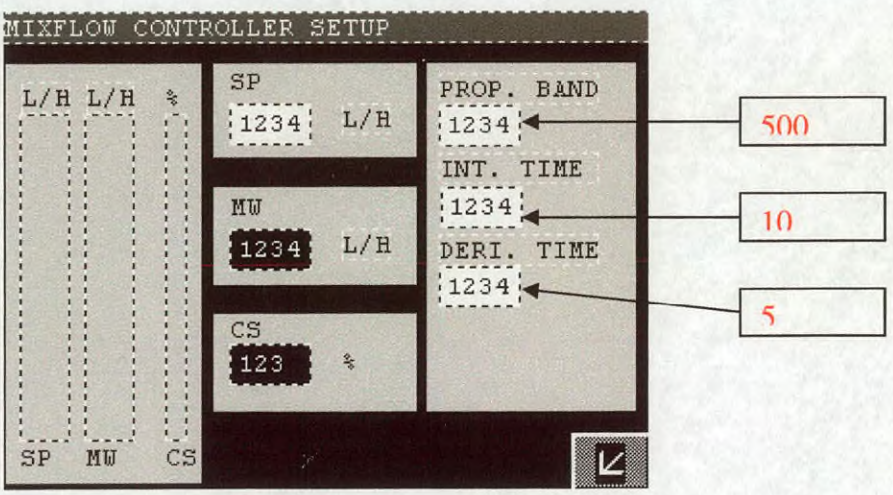

Motor Load Tuning

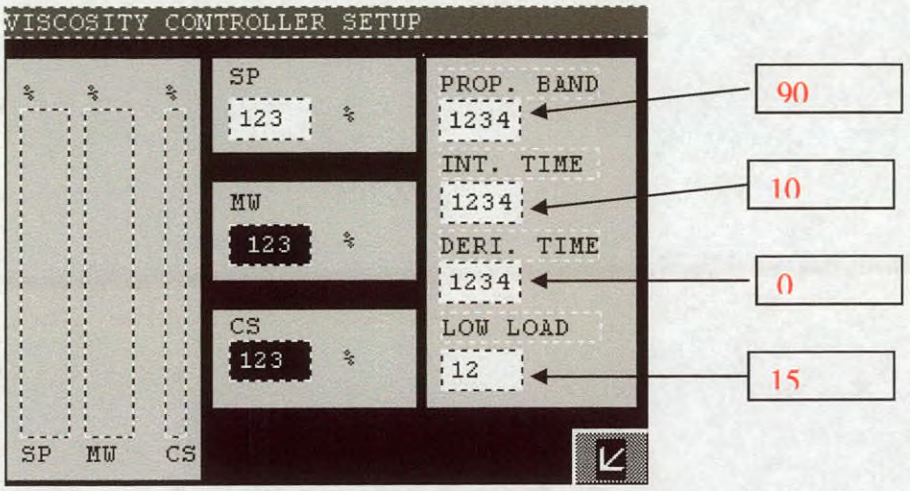

Cylinder Pressure Tuning

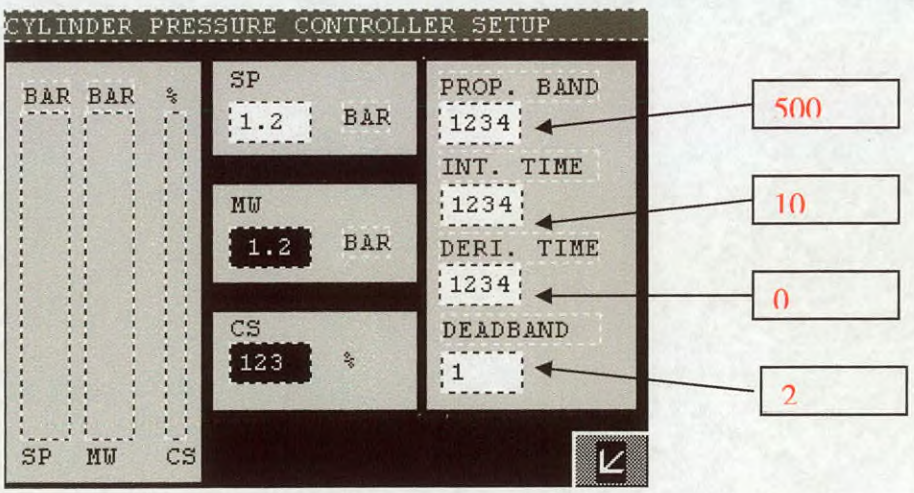

Product Temperature Tuning

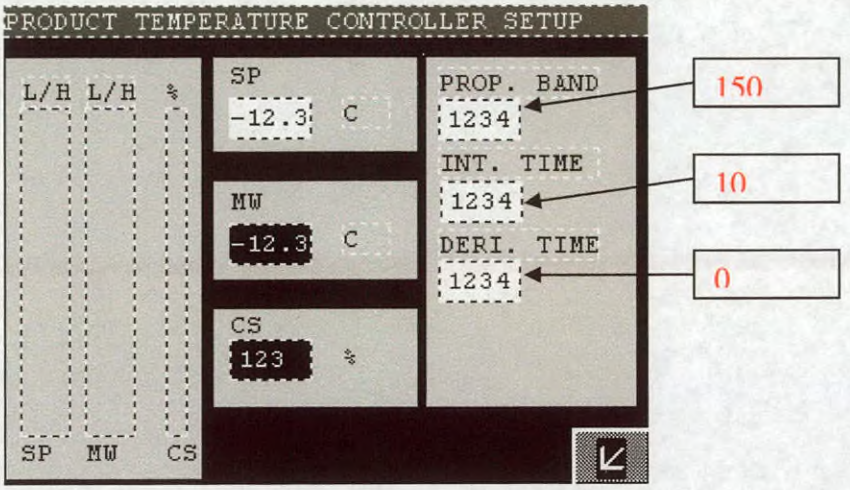

Set point High/Low

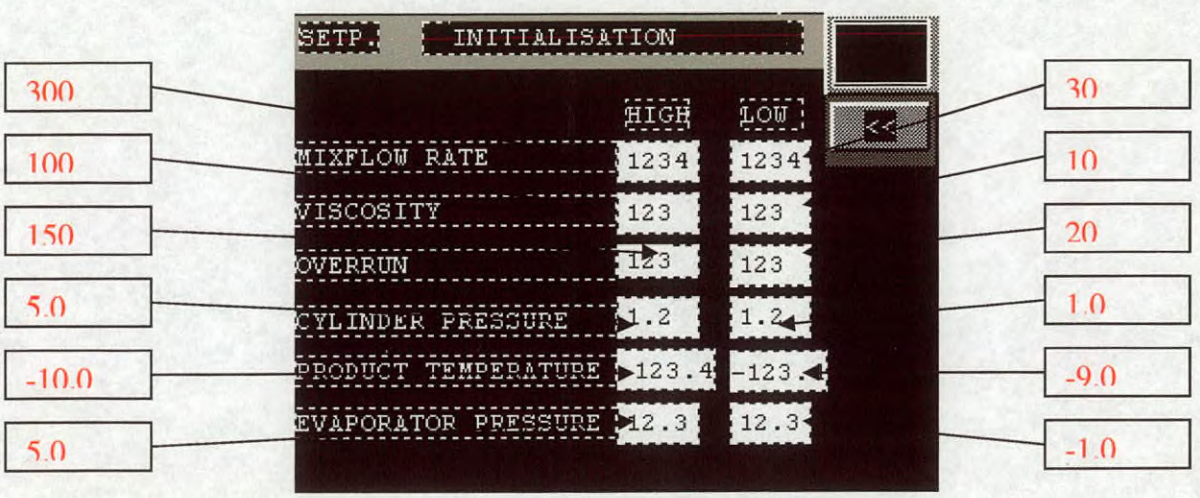

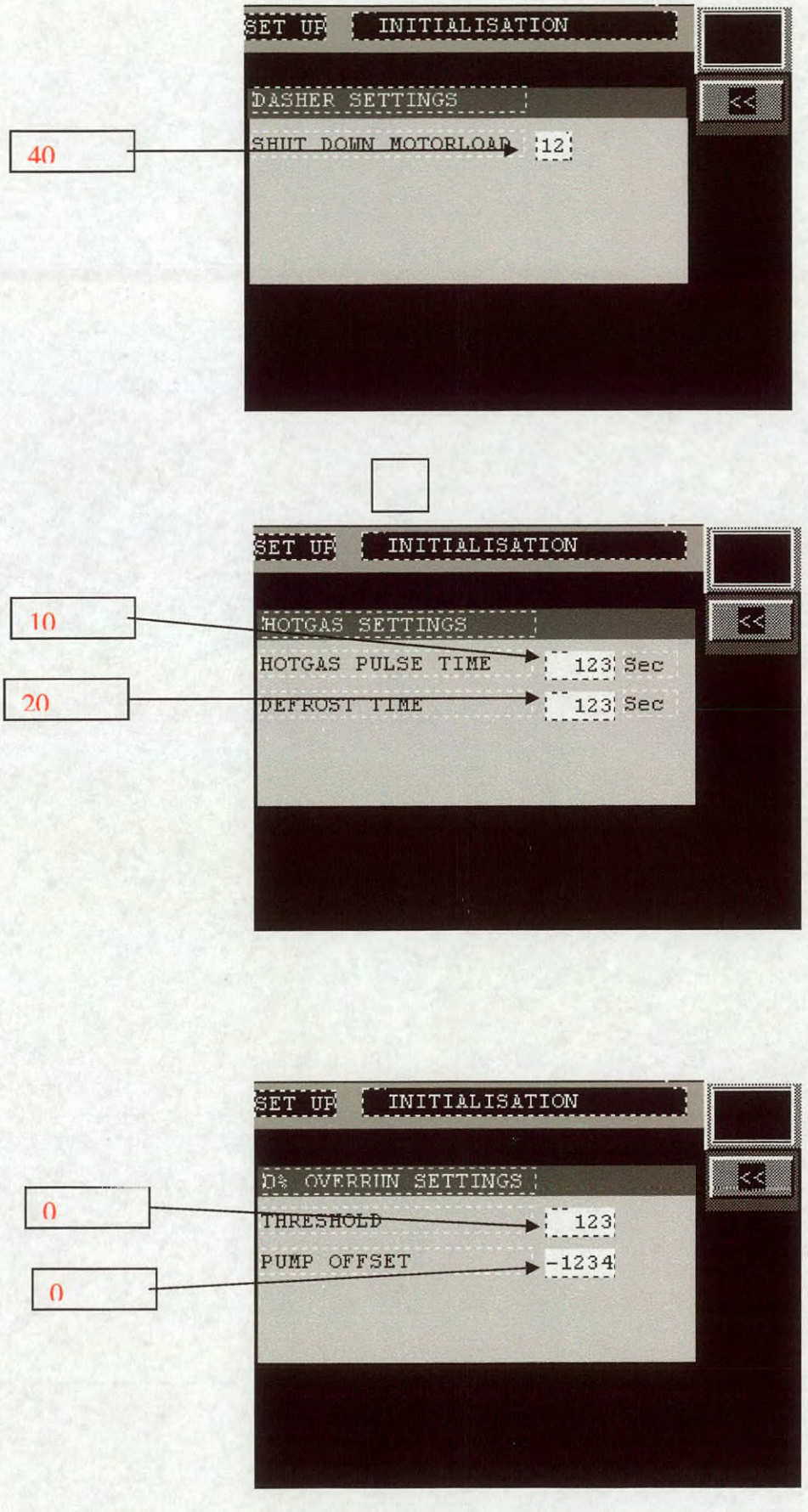
SET UP
INITIALISATION
DASHER SETTINGS
SHUT DOWN MOTORLOAD
12
40
<<
SET UP
INITIALISATION
HOTGAS SETTINGS
HOTGAS PULSE TIME
123 Sec
DEFROST TIME
123 Sec
10
20
<<
SET UP
INITIALISATION
D% OVERRUN SETTINGS
THRESHOLD
123
PUMP OFFSET
-1234
0
0
<<

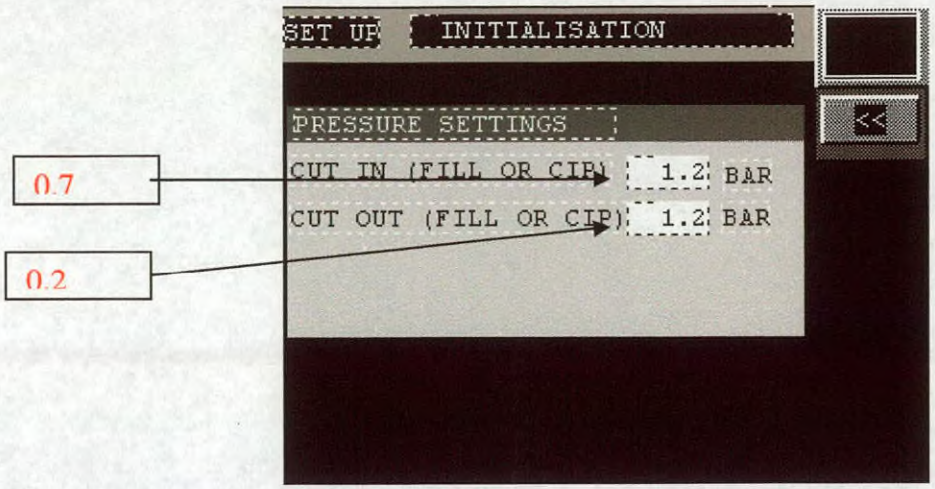
SET UP
INITIALISATION
<<
PRESSURE SETTINGS
CUT IN (FILL OR CIP)
1.2
BAR
CUT OUT (FILL OR CIP)
1.2
BAR
0.7
0.2

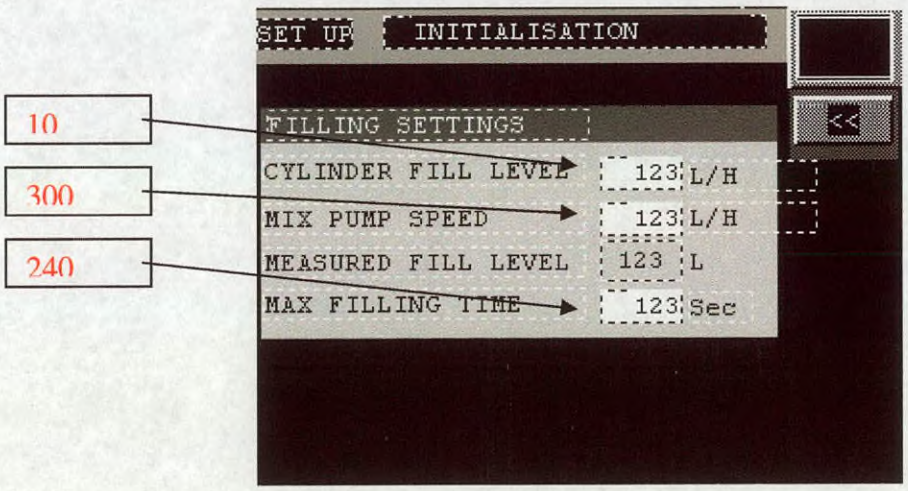
SET UP
INITIALISATION
<<
FILLING SETTINGS
CYLINDER FILL LEVEL
123
L/H
MIX PUMP SPEED
123
L/H
MEASURED FILL LEVEL
123
L
MAX FILLING TIME
123
Sec
10
300
240

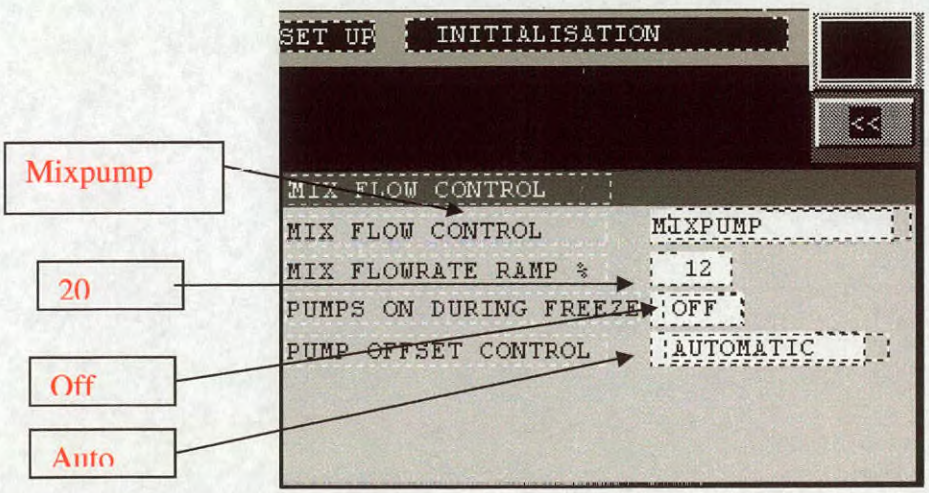
SET UP
INITIALISATION
<<
MIX FLOW CONTROL
MIX FLOW CONTROL
MIXPUMP
MIX FLOWRATE RAMP %
12
PUMPS ON DURING FREEZE
OFF
PUMP OFFSET CONTROL
AUTOMATIC
Mixpump
20
Off
Auto

Calibration

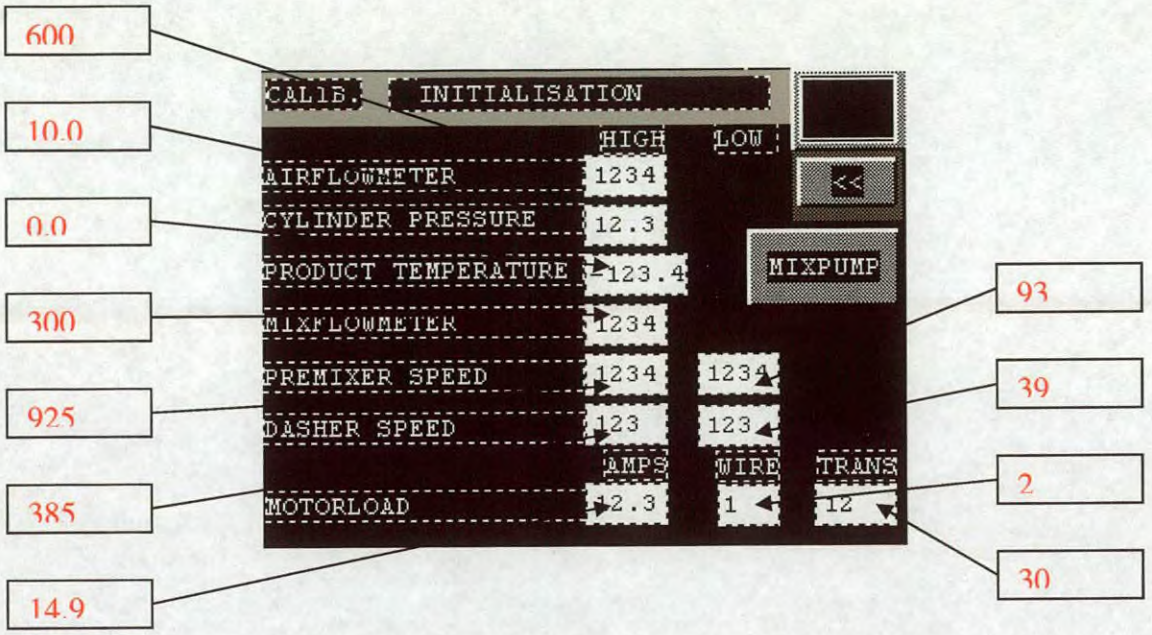

Don't touch the screen below!!!!!

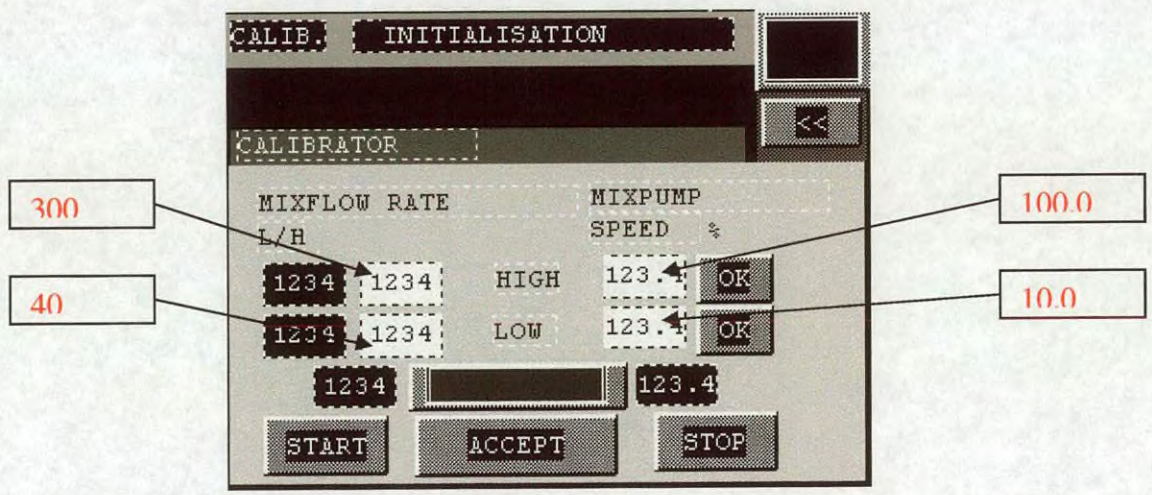

WCB
Ice Cream
An Alliance Company

General information Safety CE-declaration of conformity	1
Machine description and specification	2
Installation and Pre-operation	3
Cleaning	4
Principle of operation	5
Machine in operation	6
Control system	7
Mechanical and pumps maintenance	8
Electrical maintenance	9
Wiring diagrams	10
Spare parts drawings and –lists	11
Component specifications	12

Table of contents

General information **3**
Introduction 3
Property information 3
Liability regarding your machine 3
Warrenty 3
Receiving and Inspection 4
Spare parts 5
When you order spare parts 5

This page is intentionally left blank

GAS for Machine
10 ½ kg When Empty

General information

Introduction

Your new Machine is a quality product in the finest tradition of all WCB Ice Cream's products. Like all machinery, however, it requires basic understanding and proper care on the part of the operator and those who service it, in order to give a full measure of trouble-free service and long life.

The purpose of this manual is to provide instructions for installation, operation and maintenance of the machine.

Read and understand the manual carefully before removing from the crate, installing and prior to operating or servicing your machine.

In case you receive a manual in another foreign language than English we must draw your attention to the fact that in case of doubt, the English manual applies.

Property information

The information, data, drawings and all material contained herein remain the property of WCB Ice Cream. Reproduction or disclosure is not allowed unless expressly approved by WCB Ice Cream.

Liability regarding your machine

According to WCB Ice Cream's general terms of sale and delivery; LEV 194.

Warrenty

According to WCB Ice Cream's general terms of sale and delivery and order confirmation.

Receiving and Inspection

WCB Ice Cream equipment is run tested or inspected prior to shipment. When leaving the factory, it is well crated for normal transportation procedures. WCB Ice Cream cannot, however, guarantee safe arrival. Therefore, upon receipt of this equipment, check the received items against the packing list for damage or missing parts. Check the packing material thoroughly for small parts.

Visually inspect for damage or loss. Damage or loss should be reported immediately to the delivery carrier while present. Following the immediate notification of the lost or damaged parts, a detailed description including quantity, description of the loss or damage, and a cash value should be claimed against the carrier with respect to the guidelines set forth by the responsible carrier's policies. WCB Ice Cream's responsibility terminates F.O.B. point of manufacture unless otherwise specified per the General Terms and Conditions of Sale as published by WCB Ice Cream and amended from time to time. Contact WCB Ice Cream Order Services if shipping' information is required for handling claims.

Spare parts

When replacing parts on your machine WCB Ice Cream recommend using only **Original replacement parts** specified by WCB Ice Cream.

The drawings and spare parts lists in this manual show the proper placement and list all spare parts.

When you order spare parts

When ordering spare parts for your machine, please always state:
Machine type and serial number, and if possible drawing number, position number and part number.

WCB
Ice Cream
An Alliance Company

Graham Bells Vej 6

DK - 8200 Aarhus N

Denmark

Telephone: + 45 87 41 20 00

Telex: + 45 87 41 20 01

Table of contents

Safety **3**
Safety Decals 3
Mechanical Hazard 5
Dasher 5
Scraper Blades 6
Cleaning Chemical Hazard 7
Compressed Air Hazard 8
Halocarbon Hazard 9
Operation Cautions 10
Protect Chrome Cylinders 10
Avoid Freeze-up 10
Beware of Sanitizing Solutions 11
Prevent Pump Damage 11
Prevent Dasher Damage 11

This side is intentionally left blank.

Safety

Read and understand this manual prior to installing, operating or servicing your WCB freezer.

- Warnings, cautions and notes are contained in this manual. To avoid serious injury and/or possible damage to equipment, pay attention to these messages.
- **WARNING** Hazards or unsafe practices, which COULD result in severe personal injury or death and how to avoid it.
- **CAUTION** Hazards or unsafe practices, which COULD result in minor personal injury, product or property damage.
- **NOTE** Important information pertaining directly to the subject information to be aware of when completing the task.

Your WCB Freezer is a mechanical freezing machine, which by the very nature of its design creates certain unavoidable hazards. Safe installation, operation, and maintenance require proper training of all personnel and their supervisors.
Our objective in providing instructions and warnings is to identify each area of potential hazards and its level of severity and to guide each worker for safe operation, service and maintenance procedures.

WCB Ice Cream equipment is designed to provide minimum operator access to hazardous areas while providing adequate access for service by trained personnel. Hazardous areas are provided with guards. Various types of fasteners may be used for the guards depending on how frequently routine access is required. Regardless of the type of fastener used, the mere existence of a guard should alert the worker to the presence of a hazard. Never operate or test run the equipment with a guard removed, unless under the supervision of properly trained and authorized personnel. Then use extreme caution to avoid the hazard.

Safety Decals

The safety decals are shown below. If any decal is removed or becomes un-readable contact WCB Ice Cream for a replacement immediately

Electrical Hazard

The freezer is normally powered by electric motor(s) and have many other electronic controls and devices. In addition, electronic controls or devices may be added either at the WCB Ice Cream factory or at the installation site. This creates a hazard of electrical shock, which could cause severe injury or even loss of life.

To minimize the risk of this hazard:

1. All electric/electronic installation must comply with all applicable codes and standards.

2. All electric/electronic installation, maintenance and service, must be performed by trained and authorized electricians only.

3. Install a main power disconnect On-Off switch that can be locked in the power-off position and the key removed. This will allow maintenance or service to be performed with no possibility of the power being accidentally turned on.

4. Check motor nameplate data to be certain that it matches the electrical supply, and that all wiring, switches, starters, and overload protections are correctly sized.

5. Thoroughly read the motor manufacturer's instructions before making installation.

6. Install an emergency shutoff switch within easy reach of the operator.

7. Make the installation suitable for a wet environment, including:

8. Protection from flooding. Do not install in an area, which could fill with water to a level, which would contact the motor.

9. Protection of all electric connections within a sealed junction box.

10. Proper grounding of the motor.

Mechanical Hazard

DANGER
DO NOT perform any maintenance or service on the freezer unless the main and control power sources have been turned off and Locked Out using a locking device for which only the person performing the work has the key.

The freezer has mechanical drive components, which operates the dasher and pumps (belts and pulleys). All of these components are guarded and/or enclosed. However, it is necessary to remove the guards/enclosures to perform routine maintenance, cleaning or service procedures. These components are powered by electric motors, which may start unexpectedly from a remote control signal. Should the freezer start unexpectedly during these procedures severe injury or even loss of life could result.

DANGER
ALWAYS turn off the electrical power supply and Lock Out using a locking device for which only the person doing the work has the key before performing service or maintenance. Should the dasher start rotating unexpectedly during service and maintenance procedures severe injury or loss of life could result.

Dasher

In order to assure maximum sanitary operating conditions or for certain maintenance and servicing procedures it is necessary to disassemble and assemble the dasher. The dasher assembly is large and heavy.
This creates a hazard of severe injury for anyone handling it incorrectly. Provide enough workers or mechanical lifting assistance to enable removing, installing, and servicing the dasher safely.

To minimize the risk of this hazard:

1. Only trained and authorized mechanics should perform maintenance or service work on the freezer.

2. An emergency shutoff switch is installed within easy reach of the operator.

3. Always turn off the electrical power supply and Lock Out using a locking device for which only the person doing the work has the key before performing any of the following:

    a. Removing the stainless steel panels, which protect the dasher and pump drive areas.

    b. Performing any maintenance or service on the motor(s).

    c. Removing the front door, front bearing, or the dasher.

    d. Disassembling the pump cover or rotors.

    e. Assembling or disassembling the dasher.

Scraper Blades

The scraper blades assembled on the dasher must be sharp to work correctly. This creates a hazard of severe cuts for anyone handling the scraper blades incorrectly. Wear protective clothing for the hands and arms when handling the dasher assembly or the scraper blades. Avoid contacting the cutting edge of the scraper blades.
All dashers have removable scraper blades. These blades can be very sharp and cause severe injury if not handled properly.

To minimize the risk of cuts from these sharp blades when removing and installing the dasher:

1. When removing the dasher by hand, always use heavy protective gloves (such as welders gloves) that reach to the elbows.

2. Always work with at least one other trained person when removing or installing the dasher.

3. Remove each blade from the dasher as soon as possible to remove the danger from others in the immediate area.

4. Always store the blades together in a labelled container when not in use.

Cleaning Chemical Hazard

To properly clean and sanitize the freezer for use with food products it may be necessary to use chemical solutions. Many of the commonly used chemical solutions could cause severe injury to personnel if contacted. The hazard is especially severe for eyes, skin, or inhalation.

To minimize the risk of this hazard:

1. Thoroughly train all personnel working with cleaning/sanitizing chemicals in their safe handling and disposal according to all applicable codes and standards.

2. Additional precautions are required during the use of cleaning or sanitizing chemical solutions to minimize the risk of personnel contact, which could cause an injury.

3. During automatic cleaning/sanitizing:

4. Check all line connections in the cleaning circuit to be certain they are connected and tightened before starting.

5. Never disconnect any lines or fittings until it is known that the automatic cleaning sequence is completed and there is no chemical solutions or high temperature fluids present.

6. When using manual cleaning methods:

7. Turn off the dasher power source and Lock Out before disassembling the freezer.

8. Equip all personnel using cleaning/sanitizing solutions with protective clothing including eye protection.

9. Thoroughly train all personnel using cleaning/sanitizing in their safe handling and disposal after use.

10. Never use toxic and/or flammable solvents for cleaning.

Compressed Air Hazard

The freezer uses compressed air for the following functions:

1. Added to the product to produce "overrun."
2. Operate the bypass covers on the product pumps.
3. Operate parts of the control system of the freezer.

Compressed air creates certain unavoidable hazards. Compressed air may retain the power to move objects even after the supply is turned off. Air operated mechanical devices may operate unexpectedly from a remote control signal. If the air supply pressure exceeds design limits, plastic line connections could come apart and move around uncontrolled. These create a hazard of severe injury to personnel working in the area.

To minimize the risk of this hazard:

1. An installation of compressed air service must be performed by trained and authorized pipe fitters only.
2. All compressed air installations must comply with all applicable codes and standards.
3. Install a 10.5 bar safety relief valve in the compressed air supply.
4. Install a hand operated shutoff valve in the supply line to allow isolation of components before service or maintenance.
5. DO NOT perform any maintenance or service on the compressed air system components unless the supply valve to the system has been closed and locked or tagged.

Halocarbon Hazard

DANGER
Your freezer may use halocarbon as the refrigerant for freezing the product. Halocarbon is a hazardous chemical which, when used incorrectly, can cause severe injury or even loss of life.

If your freezer uses Halocarbon as a refrigerant for freezing the product, the following precautions are important. Halocarbon is colourless and clear in appearance with only a slight ethereal odour. It is heavier than air and thus displaces much oxygen needed for breathing. Thus it has the potential hazard of producing unconsciousness and even loss of life.
Do not open any connection into the refrigeration system until all refrigerant is evacuated and the freezer is isolated by closing the hand valve in the liquid and suction line

WARNING
A sudden release of refrigerant liquid sprayed on the skin can cause serious damage to skin tissue. Keep eyes and exposed skin areas away from potential refrigerant discharge. If such a refrigerant burn occurs, flush immediately with cold water, apply ice packs if severe and see a physician at once.

Refrigerants R-404A are generally considered to be chemically non-toxic and non-flammable; however, any gas under pressure can be hazardous because of the energy latent in the pressure alone. Never fill any refrigerant gas cylinder completely with liquid. Always limit to approximately 80% liquid full, this will allow for normal expansion.
Used Halocarbon and other fluorocarbons should be recovered and recycled.

To minimize the risk of this hazard:

1. The refrigeration installation must comply with all applicable codes and standards.
2. Maintenance and service of the refrigeration system must be performed only by trained and authorized personnel.
3. Thoroughly train all operating and maintenance personnel in the areas of:
4. Use and care of personnel protective equipment.
5. The hazardous effects of halocarbons.
6. First aid procedures.

Operation Cautions

The following important cautions describe ways to avoid incorrect operating procedures, which will cause serious damage to the freezer.

Protect Chrome Cylinders

The inside surface of the freezing cylinder is chrome plated. Incorrect operating procedures may cause severe damage or rapid wear of the chrome surface and require an expensive cylinder replacement.

1. DO NOT operate dasher without product or water in the cylinder.
2. DO NOT operate dasher with worn scraper blades at less than the recommended width dimension.
3. DO NOT use any type of acid rinse. Acid attacks chrome.

Avoid Freeze-up

A freeze-up occurs when the product becomes too cold and too stiff. The resulting load on the dasher motor and drive components may cause severe damage to the dasher, belts, motor, and other drive components. If the dasher stops, the product inside the cylinder will freeze further, requiring defrosting procedure before production can resume.

In addition to the operation instructions to prevent freeze up:

1. DO NOT turn on the refrigeration without the dasher running.
2. DO NOT allow the supply of mix to the freezer to stop during freezing operations.
3. DO NOT operate with product stiffness at greater than 100°/o motor load.
4. DO NOT turn on the refrigeration when water is present in the cylinder.
5. DO NOT leave the refrigeration on when flushing out with water.
6. DO NOT obstruct the freezer outlet.

Beware of Sanitizing Solutions

Sanitizing solutions are extremely corrosive, especially those which contain halogen compounds (chlorine, bromine, iodine). Solutions of these chemicals, will attack the chrome surface of the freezing cylinder and the special hard alloy stainless steel scraper blades. To prevent serious damage:

1. DO NOT sanitize the freezer sooner than 15 minutes immediately prior to starting production.

2. DO NOT leave sanitizing solutions in prolonged contact with any surface-product contact or exterior. As droplets dry out they become more concentrated and will cause corrosion pitting.

3. DO NOT use any type of acid-sanitizer. Acid attacks chrome.

Prevent Pump Damage

Incorrect operating procedures may cause damage or rapid wear to pump parts, especially the rotors and shafts. To obtain maximum service life of pump parts:

1. DO NOT operate the pumps dry (without water or product present).

2. DO NOT use a screwdriver or any other prying type tools when removing rotors.

3. DO NOT operate product pump against excessive discharge pressure.

4. Keep discharge lines short as possible.

5. Use large as possible discharge lines.

6. Use few as possible elbows, tees, and/or valves in the discharge line.

7. Use wide sweep elbows wherever possible in the discharge line.

Prevent Dasher Damage

Incorrect operating and/or maintenance procedures may cause severe damage to the dasher, which is expensive to replace.

WCB
Ice Cream
An Alliance Company

CE - Declaration of Conformity

Manufacturer: WCB Ice Cream

Address: Graham Bells Vej 6
DK 8200 Aarhus N
Denmark

Tel.: + 45 87 41 20 00

Fax: + 45 87 41 20 01

Hereby declares that:

Machine: MF600 GA Freezer

Serial no. 698

was manufactured in conformity with the provisions in the Machine Directive 98/37/EEC inclusive of appendix on mutual approximation of the laws of the Member States for machines with special reference to Annex 1 of the Directive on essential safety and health requirements in relation to the construction and manufacture of machines.

In conformity with:

Low Voltage Directive 73/23/EEC making use of EMC directive 89/336/EEC.

Place: Aarhus N, Denmark

Date: 09-05-2007

Signature:

WCB Ice Cream
An Alliance Company
Graham Bells Vej 6
8200 Aarhus N Denmark
Tel.: +45 8741 2000 Fax: +45 8741 2001

Tonny F. Lauridsen, Managing Director

Table of contents

Description **3**
Sanitary Design **3**
Application **3**
Customer Furnished Components Services **4**
Electrical Service 4
Compressed Air 4
Product Supply 4
Product Packing 4
Piping **4**
Cleaning Equipment **4**
Specifications **5**
Table 1: **5**
Basic Dimensions 5
Electrical data: 5
Pumps 5
Dasher 5
Compressor 5
Refrigeration 5
Capacity Mix 5
Capacity Ice Cream Overrrun @ 100% 5
Table 2: **6**
Overrun table 6
Table 3: **7**
Air Requirements 7
Water Requirements 7
Table 4: **7**
Lubrication 7

This page is intentionally left blank

Description

The Freezer processes ice cream mix into the finished product via freezing, mixing and whipping operations. It includes control systems for the control of air incorporation, frozen product stiffness, and product throughput.

The completely self contained unit with integrated refrigeration is ready for use once mix, air, power and water connections are completed. It can also be used for scraped surface freezing of other products.
Furthermore the freezer is equipped with adjustable legs.

Sanitary Design

The freezer is designed and constructed to meet the requirements of the 3-A sanitary standards for cleanability of dairy processing equipment. Furthermore, the MF freezers comply with all European safety standards, and are CE-marked.
Meeting these standards requires, in part, that materials of construction in product contract areas be stainless steel or other materials approved for food contact. All product contact surfaces must be smooth, free draining, and accessible for cleaning. The mechanical product components must be easy to disassemble for cleaning and/or inspection for cleanliness. The outer construction must prevent outside contaminants from draining or dripping into the product area.

Application

Your MF Freezer is designed and constructed only for freezing ice cream or similar products. Do not use the machine for any other product and with other equipment than described in this manual. Doing so may cause injury to personnel or cause damage to the machine.

Customer Furnished Components Services

The following summarizes the services required to install and operate the freezer.

Electrical Service

Provide correctly sized electrical service including overload protection and Lock Out capability. Check the nameplate on the freezer for specifications. Electrical service is required to operate the dasher drive motor(s), the pump drive motor(s), and the control panel(s), whether they are factory installed or customer supplied and mounted.

Compressed Air

Instrument quality sanitary compressed air is required for addition of overrun and to operate certain components.

Product Supply

A supply of product mix is required under pressure to the freezer's inlet.

Product Packing

Frozen product discharged from the freezer is not packaged.

Piping

Piping must be well supported near the freezer and in line with connection fittings so that no strain is put on the fittings. The use of large diameter lines and wide sweep elbows is recommended to keep discharge pressures to a minimum level.
The purchase and installation of all piping is the responsibility of the purchaser. This includes any valves, booster pumps, ingredients, cleaning solutions, and refrigerant, which are routed to and from the freezer.

Piping, valves, pumps, etc., may be purchased through the WCB Ice Cream sales offices serving you.

Cleaning Equipment

The freezer is designed for mechanical cleaning. A pressurized supply of controlled temperature rinse water and cleaning chemical is required. A nearby hose station and floor drain is also recommended to aid cleaning.
The dasher must be removed routinely for cleaning and/or service. The dasher is heavy and is assembled with sharp scraper blades.

Specifications

Table 1:

Basic Dimensions

	MF600 no. 698
Length	1628 mm
Width	710 mm
Height	1890 mm
Weight (approx.)	920 kg

Electrical data:

Elec. diagram	D 58175
Power connection, Ue	3 x 400V + N + PE, 50 Hz
Ie	42 A
I max	63 A
Ic	50 kA
P	20.2 kW

Pumps

Pump Model	2 x CP0
Pump Drive	1 hp (0.75 kW)
Mix Inlet Connection	38.1 mm
I.C. Outlet Connection	38.1 mm

Dasher

Dasher drive	10hp (7.5 kW)

Compressor

	15 hp (11 kW)

Refrigeration

Halocarbon 404A	10kg

Capacity Mix

Minimum lph	60 lph
Maximum lph	300 lph

Capacity Ice Cream Overrrun @ 100%

Minimum lph	120 lph
Maximum lph	600 lph

Nominal rated capacity is based on an ice cream mix containing 10.5% butterfat, 38.5% total solids, 15.5% sugar (of which 85% is sucrose), and 0.3% stabilizer.
The mix enters the unit at 4°C and is drawn at -5°C.

Table 2:

Overrun table

Weight in grams of finished product in various sized containers (x)			Overrun percent shown for various weights of mix or product input (indicated in grams per liter) (x)			
¼ Liter	½ Liter	1 Liter	1080 g % overrun	1092 g % overrun	1104 g % overrun	1116 g % overrun
120	240	480	125	127	130	133
122	243	485	122	125	127	130
123	246	492	120	122	124	127
124	249	498	117	119	121	124
126	252	504	114	117	119	121
128	255	510	112	114	116	119
129	258	516	110	112	114	116
130	261	522	107	109	111	114
132	264	528	105	106	109	111
134	267	534	102	104	106	109
135	270	540	100	102	104	107
136	273	546	97	100	102	104
138	276	552	96	98	100	102
139	279	558	94	96	97	100
141	282	564	91	94	95	98
143	285	570	89	92	93	96
144	288	576	88	90	91	94
146	291	582	86	88	89	92
147	294	588	84	86	87	90
148	297	594	82	84	85	88
150	300	600	80	82	84	86
151	302	604	78	80	82	84
153	306	612	76	78	80	82
154	309	618	75	77	78	80
156	312	624	73	75	76	79
157	315	630	71	73	75	77
159	318	636	70	72	73	75
160	321	642	68	70	71	74
162	324	648	67	68	70	72
164	328	654	65	67	68	70
165	330	660	64	65	67	69
166	333	666	62	63	66	67

(x) Before calculating weights, make certain that weight of container is subtracted.

Table 3:

Air Requirements

Air pressure	6 bar 400 nl/h (0.4 m3)
Air Connection	ø6/ø4 mm plastic hose

Water Requirements

Consumption at 25° cooling water	Approx.3.5m^3 at max capacity
Water inlet	3/4 inch hose adapter
Water outlet	3/4 inch hose adapter

Table 4:

Lubrication

Lubrication	Type of Lubrication	Interval
Pump Drive Gear Motor	The pump drive gear motor is lifetime lubricated.	Check the seal rings and for oil leaks at regular intervals.
Rotary Pump Gearcase	Only oil of the type Klüber syntheso must be used: D 220 EP	Check monthly or every 500 hours. Change every 5000 working hours.

Table of contents

Installation **3**
Prerequisites **3**
Dimensions 3
Minimum clearance around freezer for servicing 3
Electrical considerations **4**
Electrical data: 4
Pump drive 4
Dasher drive 4
Piping considerations **4**
Product 4
Sanitary air 4
Water supply 4
Sanitary air considerations 4
Water supply considerations 4
Other considerations 4
Installation **5**
Uncrating and Leveling 5
Adjustable Leg 6
Sanitary Compressed Air Service **7**
Uses For Sanitary Air 7
Sanitary Air Required 7
Required Pressure/Volume 7
Required Connection 7
Water Connections **8**
Required Connection 8
Required Pressure/Volume 8
Electrical Connections **8**
Wiring diagrams 8
Main power disconnect/Lock out 8
Wet environment 8
Required Connections 9
Current Transducer Winding 10
Current Transducer Winding and Calibration instructions 11
Mix and product piping **12**

Pre-operation **13**
Start-up for the Programmable Controller **13**
Dasher and dasher drive preparation **13**
Pumps and pump drive preparation **13**
Built-in refrigeration system preparation **14**
Water valve regulation 14
First Cleaning **14**

This page is intentionally left blank

Installation

Prerequisites

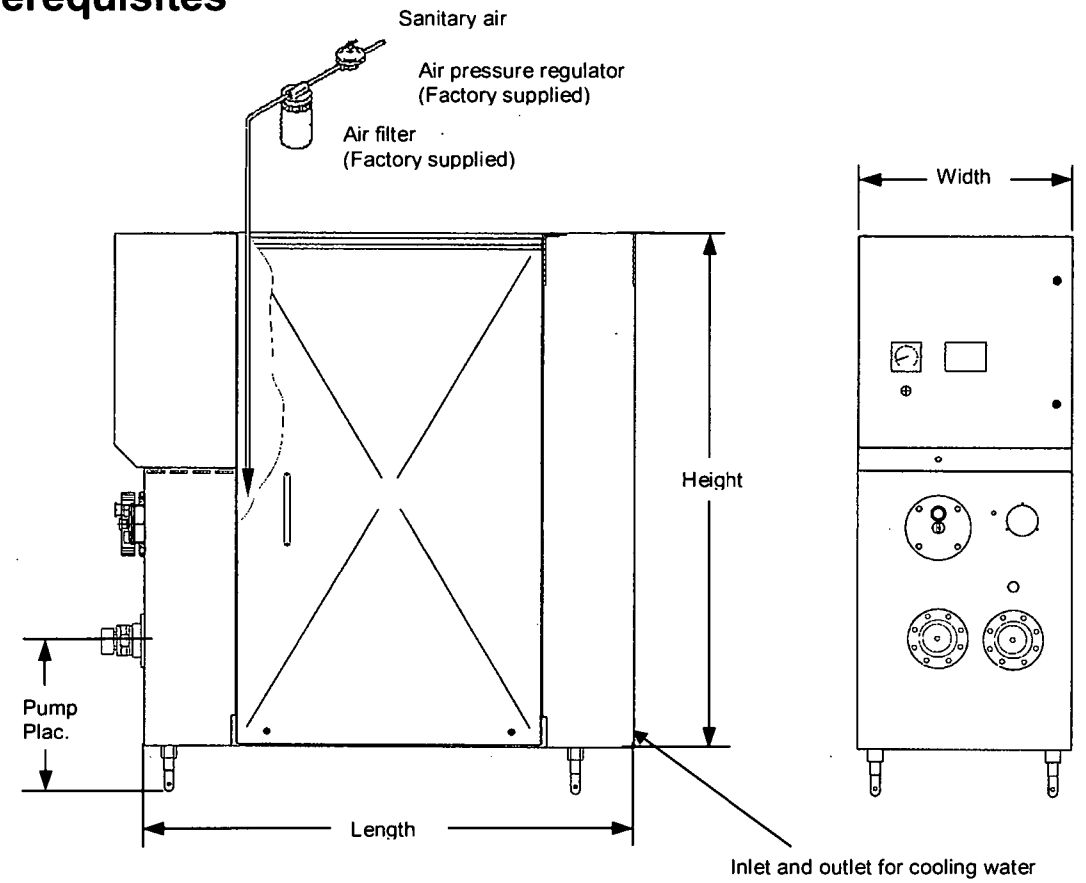

Overall dimensions of Freezer

Dimensions

Model	MF 600
Length	1628 mm
Width	710 mm
Height	1890 mm
Pump plac.	520 mm
Weight approx.	920 kg

Minimum clearance around freezer for servicing

Front	1100 mm
Side	450 mm
Back	760 mm

Electrical considerations

Model	**MF 600**

Electrical data:

Elec. diagram	D 58175
Power connection, Ue	3 x 400V + N + PE, 50 Hz
Ie	42 A
I max	63 A
Ic	50 kA
P	20.2 kW

Pump drive

Pumps	**2 x CP0**
Mix/Product pump	1 hp (0.75 kW)

Dasher drive

Open dasher	10 hp (7.5 kW)

Piping considerations

Product

Mix inlet	38.1 mm
Product outlet	38.1 mm

Sanitary air

Air supply	ø6/ø4 mm plastic hose

Water supply

Water supply	3/4 inch hose adapter

Sanitary air considerations

Air pressure	6 bar

nl/h = normal liters/hour

Water supply considerations

Water pressure	3-4 bar

Other considerations

Warm water supply near the freezer for cleaning purposes, and adequate floor drain near the freezer.

Installation

DANGER
Install the freezer in an area with good ventilation. The possibility of leaking refrigerant liquid or gas creates a hazard of severe injury or loss of life when installed in areas with poor ventilation, see Refrigerant Hazard section.

1. When installing the freezer, consider these items before locating the freezer:
2. Install the freezer in a location with good lighting and clearance around it for maintenance and operation.
3. Locate with consideration for required service connections. Keep service supply lines as short and direct as possible for optimum operating efficiency.
4. Locate close to associated process equipment to minimize piping between equipment and minimize pressure build up through lines.
5. Locate near floor drains with a hose station nearby.

Uncrating and Leveling

1. Remove the crating, but leave the freezer on the skid.
2. Move to plant installation site and place in position.
3. Remove the fastening belts from the freezer.
4. Raise the freezer by lifting at the proper locations as illustrated in the figure below.
5. Be certain that the lift truck capacity is higher than the freezer weight.

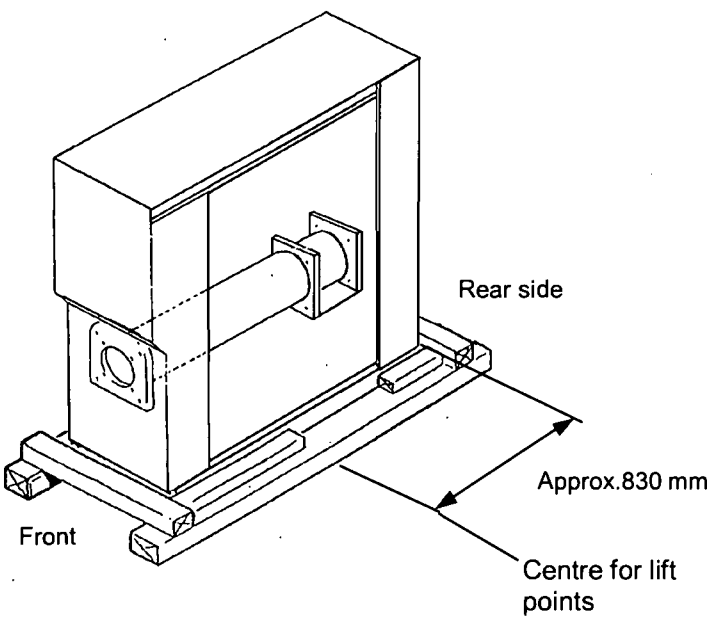

CAUTION
Dropping the freezer or twisting the frame by uneven lifting may cause misalignment of critical parts or otherwise damage the freezer. Lift carefully and evenly at all locations.

6. Remove the skid from under the freezer.

7. Lower the freezer slowly until the adjustable legs just touch the floor.

CAUTION
The lifting equipment when proceeding to the next step must still support the weight of the freezer.

Adjustable Leg

8. Level the freezer by turning the leg clockwise or counter clockwise. When correctly positioned, the freezer should be level from side to side and have a slight pitch end to end so that water drains out the rear end of the cylinder. This is an approximate 1.60 mm per foot slope. The bottom plate is the same level as the freezer cylinder and may be used for levelling.

9. Check each adjustable leg. Make sure they are all firmly against the floor when levelling is finished.

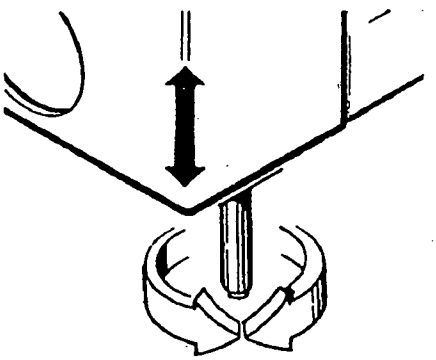

Adjustable leg

Sanitary Compressed Air Service

WARNING
Incorrect compressed air service installation may cause system components to fail or come apart with explosive force and result in severe injury to personnel working in the area, see Compressed Air Hazard section.

The following must be considered during installation:

- All installation must be by trained and authorized pipe fitters only.
- The installation must comply with all applicable codes and standards.
- Install a hand operated shutoff valve in the supply line to allow isolation and depressurisation of components before service or maintenance.

Uses For Sanitary Air

Sanitary compressed air is required for addition to the product (overrun) and to operate certain mechanical devices on the freezer. One common connection point supplies air for all the various uses.

Sanitary Air Required

Air supply intended for direct addition to products for human consumption must be "sanitary quality." If milk or milk products are being processed, the air must be oil, dirt, and moisture free.

Note: An air filter with automatic drain is supplied with the freezer. It does not remove oil, dirt and moisture to the extent required by the above standards. Its purpose is to provide back-up protection in the event of a failure in the system.

Sanitary disposable (filter) and a sanitary product check valve as required by the standards, are supplied as part of the freezer.

Regardless of the product, the air must be "instrument quality" to ensure trouble free operation of the controls on the freezer.

Basically this standard requires:

- Maximum particle size of 3 microns.
- Dew point at line pressure-minimum of –7.8°C below the lowest expected temperature in process area, and under no circumstances higher than 2.2°C.
- Maximum oil/hydrocarbon content (exclusive of non-condensibles) 1 ppm.

An excellent way to improve the air supply and reduce the load on the filters is to use compressor source air from a cold storage room at approximately -29°C.

Required Pressure/Volume

Recommended supply pressure is 6 bar at the inlet connection to the freezer.

Required Connection

Connect the sanitary compressed air supply to the inlet connection of the filter/trap provided.

Water Connections

The inlet and outlet for cooling water have adaptors for water hoses.

Required Connection

Connect the cooling water supply at the rear side of the freezer. (See Fig.)

Required Pressure/Volume

Recommended supply pressure is 3-4 bar at the inlet connection to the freezer.

Electrical Connections

Wiring diagrams

Wiring diagrams are included at the end of this manual. In addition, an electrical information plate is attached to the freezer. This plate shows the electrical specifications for the motors and the control system.

Main power disconnect/Lock out

A main power disconnect with Lock Out capability is provided. This is a disconnect, which can be locked in the power off position and the key removed. This will allow service and maintenance to be performed with no possibility of someone accidentally starting the freezer.

Wet environment

Make sure installation is suitable for wet environment.

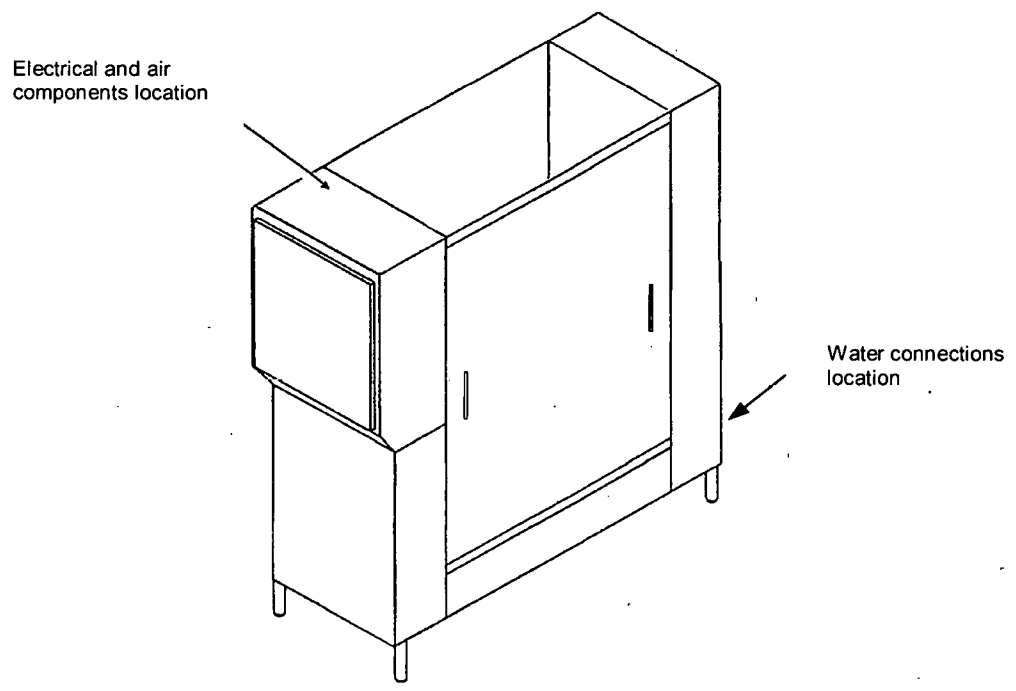

Required Connections

The following electrical installation connections are required for the freezer:

1. Main Power Supply: Required for the dasher drive motor, pump drive motor and automation system.

   - Check the electrical information plate.

     The electrical specifications shown must match the electrical supply. If not, contact the nearest WCB Ice Cream sales office or the WCB Ice Cream manufacturing facility.

   - Connect main power to the main breaker in the electrical enclosure.
   - Correct dasher drive motor rotation is counter clockwise facing the motor shaft.
   - External interface options: CIP, sanitize, ratio etc. See electrical wiring diagram.
   - Correct pump motor rotation is clockwise facing the motor shaft.

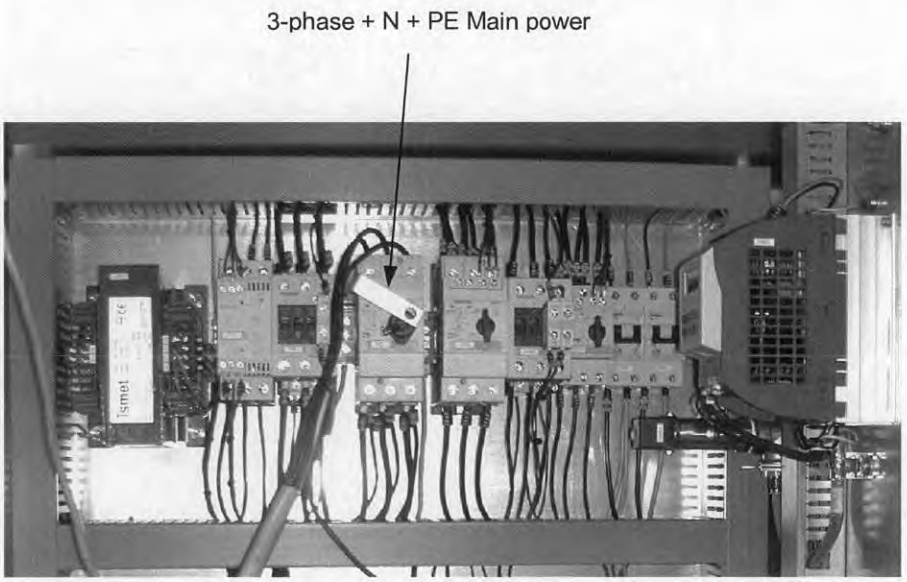

Main power supply connections

Current Transducer Winding

A current transducer is used to continuously measure the amount of current load being used by the dasher motor. The amount is displayed on the control panel.

For the instruments to work correctly, the current transducer must be connected as described in the Current Transducer Winding and Calibration section. Correct connection varies depending on the full load current rating of the motor, and the type of motor starter used (whether or not a wye [star] delta type).

If the freezer is supplied from the factory with the dasher drive motor(s) installed, this wiring has already been installed. If the freezer is supplied from the factory without the dasher drive motor(s) the wiring must be field installed.
Also use this procedure any time the transducer is replaced or any time the dasher drive motor is replaced with one which has a full load current rating different from the replaced motor.

Current Transducer Winding and Calibration instructions

1. Determine the full load current rating of the Dasher motor by reading the motor's nameplate.

2. Determine the range of the current transducer. It has 3 ranges: 20-, 30- and 50 Amp.

3. Select the transducer range that comes closest to the dasher motor amperage. It is important to use as much range of the transducer as possible.

   Example: Dasher current is 14.9 A. It is covered by the 20 A setting but will leave an unused range of 5.1 A of the current transducer.

   It is better to take the wire 2 times through the transducer. This will produce an amperage of 2 x 14.9 A = 29.8 A, which only leaves 0.2 A of unused range. Set the scale of the current transducer to 30 A.

4. Go into the calibration main menu and select Dasher parameters. Find the setting "Dasher Motor Amperage" and use the arrow up and down buttons to adjust the value to fit the Dasher Motor current rating. In this case 14.9.

5. Adjust the setting "Wire turns in load transducer". In this case 2.

6. Adjust the setting "Transducer range" so it corresponds with the setting on the current transducer. In this case 30.

7. The control system will now scale the 4 to 20 mA, inread from the current transducer, to 0-100% and 0 – 14.9 A.

8. Press the "F1" button to leave the set-up menu.

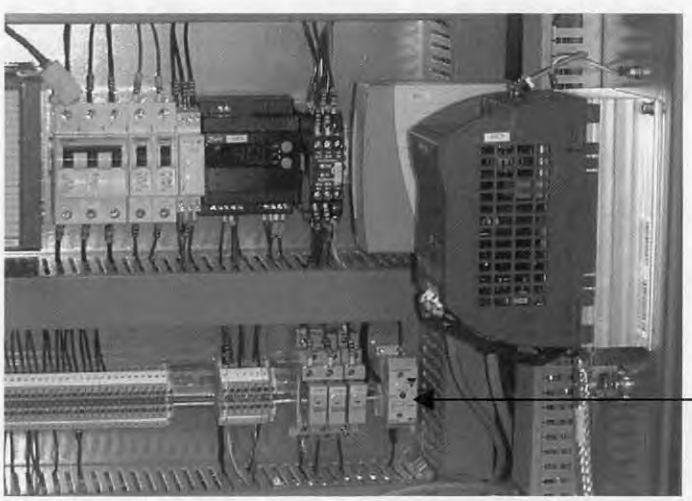

Main power supply connections

Mix and product piping

The following items should be considered when installing any piping to and from the freezer:

1. Independently support and align the mix supply and product pump piping. Do not support piping from pump connections.
2. Use mix supply line size equal to or larger than the connection size on the mix pump.
3. Place the ice cream mix tank at a higher level than the inlet of the mix pump, so that the mix can flow to pump by gravity alone.
4. Install the discharge piping to keeps discharge pressure as low as possible.
5. Arrange piping to provide clearance for maintenance procedures.

CAUTION
High discharge pressure for the freezer product pump will decrease service life of pump parts. Keep the discharge pressure as low as possible by using short direct lines, large as possible line size, and few as possible elbows, tees, and valves in discharge tine. Use sweep els in place of narrow radius els.

Pre-operation

Start-up for the Programmable Controller

The freezer parameters must be programmed into the programmable controller.
See freezer set up when freezer is new or any time software is installed in the section: Control system.

Dasher and dasher drive preparation

Before attempting to start any of the electric motors the first time, the dasher should be removed from the freezing cylinder.

DANGER
Turn off electric supply and Lock Out before removing the protective stainless steel panels around the dasher drive or before handling any electric wiring. Unexpected starting of the dasher drive or pump drive may cause severe injury or loss of life for personnel in contact with drive components. Changing drive rotation direction requires handling of electric wires which, when energized, could cause severe injury or loss of life.

1. Remove the connecting pipe.
2. Turn the front cover of the freezing cylinder 1/12 of a revolution anticlockwise, by hand.

Note: Never use the connecting pipe as a handle!
It could very easily be damaged with leaking O-rings as a consequence.

3. The cover can now easily be removed and the dasher be pulled out.
4. Check V-belt tension.
5. Start the dasher motor, and check for correct dasher drive motor rotation.
Correct dasher drive motor rotation is counter clockwise when facing the front of the freezer.

Pumps and pump drive preparation

1. Start the pump motor.
2. Check for correct rotation.

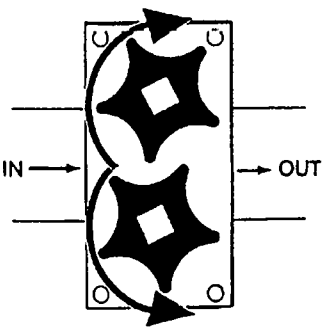

Correct pump rotation

Built-in refrigeration system preparation

The compressor is charged with the proper amount of refrigerant, and compressor oil. Normally no adjustments are required before initial starting up. The refrigerant pressure gauges should, by standstill, show a temperature close to the temperature of the surroundings.

If however the gauges show zero pressure, it is an indication, that the freezer has been damaged during transport with loss of the refrigerant charge as consequence.
If that is the case, **a competent refrigerating engineer** should be called to find and repair the leak, and recharge the system with refrigerant.

See Halocarbon hazard in Section 1- Safety in this manual.

Refrigerant type indication is stated in chapter 2, Machine Specifications.

No other refrigerant must ever be used."
The compressor is charged with the proper amount

Water valve regulation

At 25° C cooling water, the water valve should be regulated to condenser pressure at 30°C – 32° C. This can be read on the HP (High pressure manometer).

First Cleaning

Carefully clean all product contact surfaces prior to use to eliminate all possible foreign material, which may have accumulated during manufacture, shipment, and installation. In addition, this gives personnel an opportunity to become familiar with the freezer. See Cleaning and sanitizing care of stainless steel.

1. Use a detergent solution as described in the Cleaning and sanitizing section.
2. Disassemble all of the product contact areas of the freezer including:
   - Freezing cylinder front door.
   - Dasher assembly.
   - Freezing cylinder rear door.
   - Rotary pumps- covers, rotors, and bodies.
3. Scrub the interior surface of the cylinder and all the removed product contact parts using a brush and detergent until completely clean.
4. Thoroughly rinse away all traces of detergent solution with clean water and allow the cylinder to drain.
5. Assemble all of the product contact parts.
6. Clean the exterior surfaces of the freezer by wiping methods only.

Table of contents

Cleaning and Sanitizing **3**
Definitions 3
Rinse 3
Detergent Solution 3
Acid Rinse 3
Sanitizing 3
CIP Cleaning 4
Hand Cleaning 4
Care of stainless steel **5**

This page is intentionally left blank

Cleaning and Sanitizing

Cleaning and sanitizing of equipment is necessary on a routine basis whenever processing food products. The frequency of cleaning and the chemicals and procedures used will vary depending on the product. It is the responsibility of the user to establish procedures, which are suitable for the product.

Users should develop a well defined cleaning and sanitizing program. This program must take into consideration all applicable laws, regulations, and standards relative to the protection of public health and the safe use and disposal of chemicals. See the safety section: Cleaning chemical hazard.

The following information is presented as general guidelines only. For additional help contact your local health authority and a reputable supplier of cleaning and sanitizing chemicals for the food processing industry. You may also contact your local WCB Ice Cream sales representative for recommendations.

Definitions

Rinse

The purpose of rinsing is to remove excess residual product and reduce the load required for detergent removal. At the end of washing, rinsing removes residual chemical solutions. Without the rinse, the chemicals could be corrosive or react unfavourably with other chemical solutions.

Use a rinse water temperature, which readily removes the excess product or residual chemical solutions. Generally, this means warm water near 37°C. Use potable water for final rinse.

Detergent Solution

The customer is responsible for using chemical solutions compatible with the chrome inner lining of the cylinder. Your supplier of cleaning chemicals should recommend the type of chemical, concentration, temperature, and time of exposure for cleaning with your conditions.

Acid Rinse

Do not use any type of acid in the final rinse water. Acid attacks the chrome inner cylinder lining.

Sanitizing

Sanitizing is used to kill bacteria on product contact surfaces of the unit. When using chemical solutions, sanitizing should be performed no earlier than 15 minutes prior to processing product. The chemicals commonly used for sanitizing (chlorine or iodine containing compounds) are extremely corrosive.

Solution strength and exposure time must be closely regulated.

Hot water may be used for sanitizing to avoid the corrosive effect of chemical solutions.

CIP Cleaning

CIP (Clean-In-Place) means cleaning solely by flowing rinse, detergent, and sanitizing solutions, pumped through the product contact areas at high velocity. Parts of the unit such as the dasher and pumps are turned on and off to provide additional turbulence and more rapid cleaning. The solutions must be supplied from a separate source such as a central CIP system.

With CIP methods, it is necessary to periodically disassemble the unit to check for cleanliness and the effectiveness of the CIP cleaning. Hand clean if necessary at this time. Checking- once per month is recommended.

WARNING
All chain drives will start without previous notice when the freezer is in CIP ON position.

Hand Cleaning

Hand cleaning means that the application of rinses, detergents, and sanitizers is done by hand. For example, rinse water may be sprayed over product contact surfaces with a hose and detergent solution may be scrubbed on with a brush.

CAUTION
Using the wrong cleaning tools will damage product contact surfaces. Never use steel wool or a wire brush. Use a non-metallic brush.

Cleaning example

	Stage	Approx. Time: min.	Approx. temp: °C
1.	Pre-rinse with water Outgoing water to drain	7	10 - 15
2.	Lye wash - 1% caustic soda solution with wetting agent and phosphate additives. Is returned to tank after use	12	65 - 70
3.	Hot water sterilisation. Water displaces lye and goes to drain after regenerative cooling	12	90 - 95
4.	Water goes to drain and graduate cooling.	- -	- -

The times mentioned above are normative and the program is effective from a bacteriological point of view, but it does not prevent hard rinsing water from depositing lime salts.
These can be removed once or twice every season by means of acetic acid or citric acid (PH 3.5 - 4.5) according to the following procedure:
The freezer and the pumps are disassembled and the individual parts are washed in the above mentioned weak acid (max. 100 ppm), and are then immediately after carefully rinsed in clean, cold water and dried.

Care of stainless steel

The stainless steel components in WCB Ice Cream equipment are machined welded and assembled by skilled craftsmen using manufacturing methods that preserve the corrosion-resistant quality of the stainless steel.

WARNING
Hydrochloric acid, even with inhibitors added, is not recommended for cleaning stainless. Inhibitors are specific compounds that are added to cleaning chemicals to diminish their corrosive effect on metals. Most inhibitors are proprietary, and recommendations for their use are available from the supplier.

Retention of corrosion resistant qualities under processing conditions requires regular attention to precautions listed below.

Note: Corrosion resistance is greatest when a layer of oxide film is formed on the surface of stainless steel; should this film be disturbed or destroyed, stainless steel becomes active and much less resistant to corrosion.

1. Regularly check all electrical devices connected to the equipment in any way for stray currents caused by improper grounding, damaged insulation or other defects.

   Corrosion: "Pitting" often occurs when stray currents come in contact with moist stainless steel.

2. Never leave rubber mats, fittings, wrenches, etc. in contact with stainless steel.

   Corrosion: Pitting or galvanic action. Objects retards complete drying, preventing air from reforming the protective oxide film. Galvanic corrosion occurs when two dissimilar metals touch or wet.

3. Use water conditioner when water supply contains foreign matter, which may cause discolouration or deposits.

   Corrosion: Pitting, deposits, discolouration. Deposits counteract the best cleaning practices and cause corrosion of the best quality stainless steel.

4. Immediately rinse equipment after use with warm water until the rinse water is clear. Clean the equipment (manual or CIP) as soon as possible after rinsing.

   Corrosion: Discolouration deposits, pitting. Product deposits often cause pitting beneath the particles.

5. Use only recommended cleaning compounds. Purchase chemicals from reputable and responsible chemical manufacturers familiar with stainless steel processing equipment. They continuously check the effects of their products on stainless steel

6. Use cleaning chemicals exactly as specified by the manufacturer. Do not use excessive concentrations, temperatures or exposure times.

   Corrosion: Pitting discolouration, stress cracks. Permanent damage often occurs from excessive chemical concentrations, temperatures, or exposure times.

7. For manual cleaning use only soft non-metallic brushes, sponges or pads. Brush with the grain on polished surfaces; avoid scratching the surface.

   Corrosion: Pitting, scratches. Metal brushes or sponges will scratch the surface and promote corrosion over a period of time. Metal particles allowed to remain on a stainless steel surface will cause pitting.

8. Use chemical bactericides exactly as prescribed by the chemical manufacturer in concurrence with local health authority. Use the lowest possible concentration, temperature and exposure time possible. Flush immediately after bactericidal treatment. In no case should the solution be in contact with stainless steel for more than 20 minutes.

   Corrosion: Protective film destroyed. Chlorine and other halogen bactericides can destroy the protective film. A few degrees increase in temperature greatly increases chemical activity and accelerates corrosion.

9. Regularly inspect the joints in pipelines. Be sure all connections are tight fitting without binding.

   Corrosion: Crevice corrosion. Small crevices caused by improperly seated gaskets will promote crevice corrosion. Stainless steel under stress will develop stress cracking, especially in the presence of bactericides containing chlorine.

10. Regularly inspect equipment for surface corrosion (i. e. pitting, deposits, stress cracks, etc.). If deposit or colour corrosion is detected, remove it immediately using mild scouring powder and detergents. Rinse thoroughly and allow to air dry. Review production and cleaning procedures to determine the cause.

Note: If corrosion is not removed, the protective film cannot be restored and corrosion will continue at an accelerated rate.

Table of contents

Principles of Operation **3**
Product Flow System **4**
Mix Pump 4
Sanitary Air Inlet 4
Freezing cylinder and Dasher Assembly 4
Product Pump 4
Pump drive and speed control system **5**
Mix Pump 5
Product Pump 5
Air System **6**
Overrun 6
Freezing cylinder and dasher **8**
The refrigerating system 9
Motor Starter Protector **12**
Electrical System Description **13**
Operator Workstation 13
Power Supplies and Components **14**
Power Transformer 14
Control System Components **14**
C/I Transducer 14
Interface Module 14
AC Inverters 14

This side is intentionally left blank

Principles of Operation

The freezer is composed of several systems working together:

1. Pump the product through the freezing cylinder.
2. Add air at a controlled rate.
3. Incorporate air into the product.
4. Freeze the product to the correct stiffness.
5. Pump the frozen product to the next process step.

Product Flow System

Mix Pump

The mix pump is mounted on the front of the freezer. Mix from the supply tank is taken by the mix pump and is pumped to the inlet end of the freezing cylinder.

The speed of the pump is controlled to maintain a constant mix flow rate.

Sanitary Air Inlet

Sanitary air is added to the liquid product mix through an air inlet located at the front end of the freezing cylinder. Air added to frozen dessert products is known as "overrun" and is necessary to give the product a desirable body and texture.

Freezing cylinder and Dasher Assembly

In the freezing cylinder air and mix are whipped thoroughly together by the action of the dasher. The dasher, which is attached with scraper blades, rotates inside the freezing cylinder. As metered mix and air enter the cylinder, the mix freezes on the cold cylinder wall and is continuously scraped off by the scraper blades. The rotating dasher incorporates the air and mix into a homogeneous semi-frozen product.

Product Pump

The semi-frozen ice cream discharges from the outlet end of the freezing cylinder and through the product pump. The speed of this pump is controlled to maintain a constant pressure inside the freezing cylinder. The ice cream is pumped to the next processing step; usually forming and/or packaging equipment.

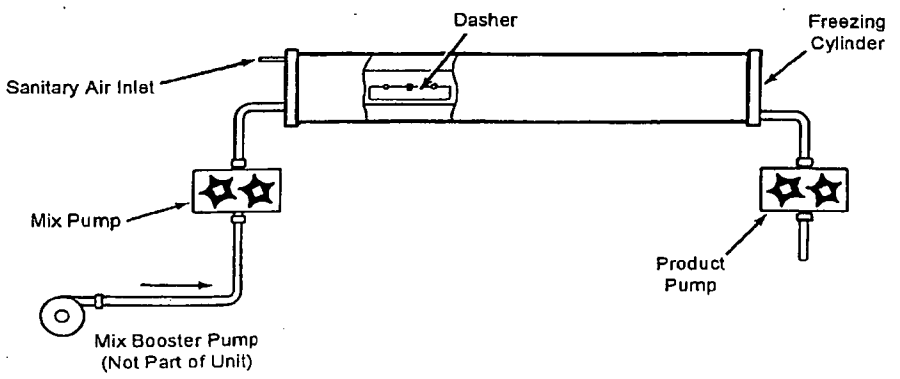

Product flow

Pump drive and speed control system

The mix and the product pumps are directly driven by a variable speed, three phase electric motor.

The speed of the motor can be increased or decreased through the use of an AC inverter. The programmable controller gives an input signal to the AC inverter. The AC inverter then increases or decreases the electrical frequency.

Mix Pump

The speed of the mix pump motor is controlled by the programmable controller. The correct speed is pre-programmed into the programmable controller prior to operating the freezer.

Product Pump

The speed of the product pump is also controlled by the programmable controller. The programmable controller monitors the cylinder pressure and adjusts the speed of the product pump to maintain a constant pressure inside the cylinder.

The mix pump and the product pump may or may not operate at the same rpm, depending on the programmable controller programming.

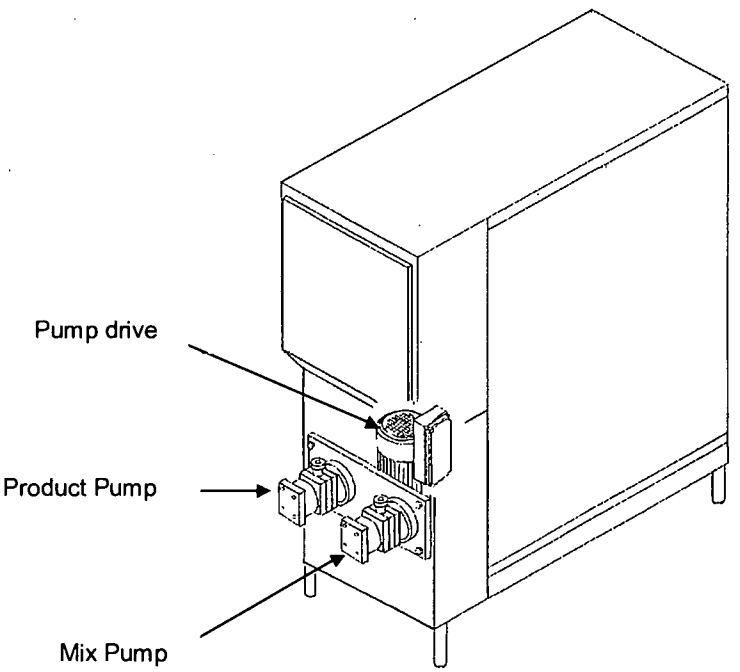

Mix and Product Pump drive system

Air System

A constant flow of air should be supplied to the Freezer at the main air inlet. The air passes a filter/regulator and the solenoid main valve opens and closes for the air supply.
The constant flow of air, under pressure, is metered into the ice cream mix to provide overrun.
The ice cream mix is fed into the freezing cylinder by a mix pump, and during the passage through the cylinder, the air is whipped into the mix by the action of a rotating dasher.
Whipping and freezing takes place under air pressure, which can be regulated to obtain the desired overrun.

The figure shows a schematic diagram of the ice cream- and air system.

The air, necessary to obtain the desired overrun, is fed to the inlet end of the freezing cylinder, together with the ice cream mix.

Overrun

Control of overrun is accomplished as interplay between the capacities of the mix pump, the ice cream pump and the air pressure, as set by the air pressure regulator.
It is obvious, that the ice cream pump must have a higher capacity than the mix pump. The air, which volume is reduced because of the prevailing pressure, makes up the difference in capacity.

After passage of the ice cream pump the air in the product re-expands to normal volume and gives the product the desired overrun, provided that the air pressure and the difference in pump capacities, pump ratio, were right. These are the two factors by which the overrun can be controlled.

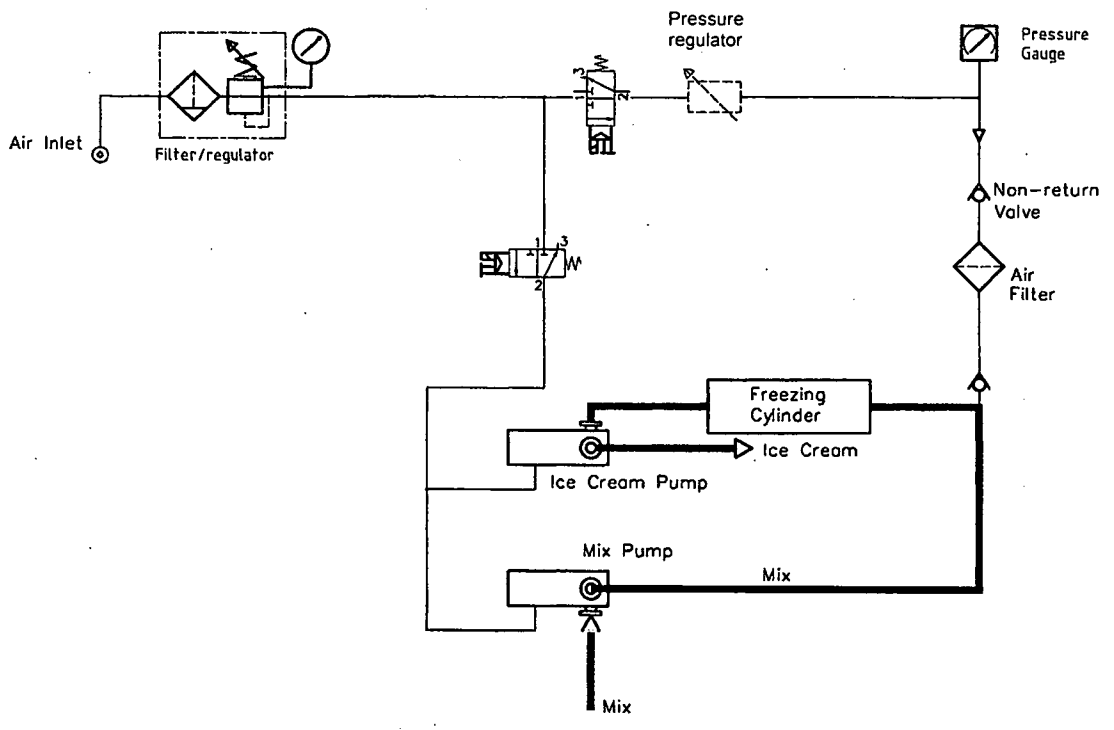

Ice cream- and Air system

Air pressure regulator

An adjustable constant air pressure regulator is connected to the air supply line. The air pressure gauge shows the actual air pressure.

Air pressure regulator (Freezing Cylinder)(Manually operated freezers only)

The pressure in the freezing cylinder is regulated at the front of the freezer.

Non return valve

The valve is placed on the sanitary tee in the mix pipe from the mix pump. Air under constant pressure enters the valve body through the tube. The other end of the tube is connected to the air control system. The valve body carries an O-ring in a V-grove

It takes about 0.5 to 1 bar air pressure to lift the O-ring from the seat and thereby to open the valve.

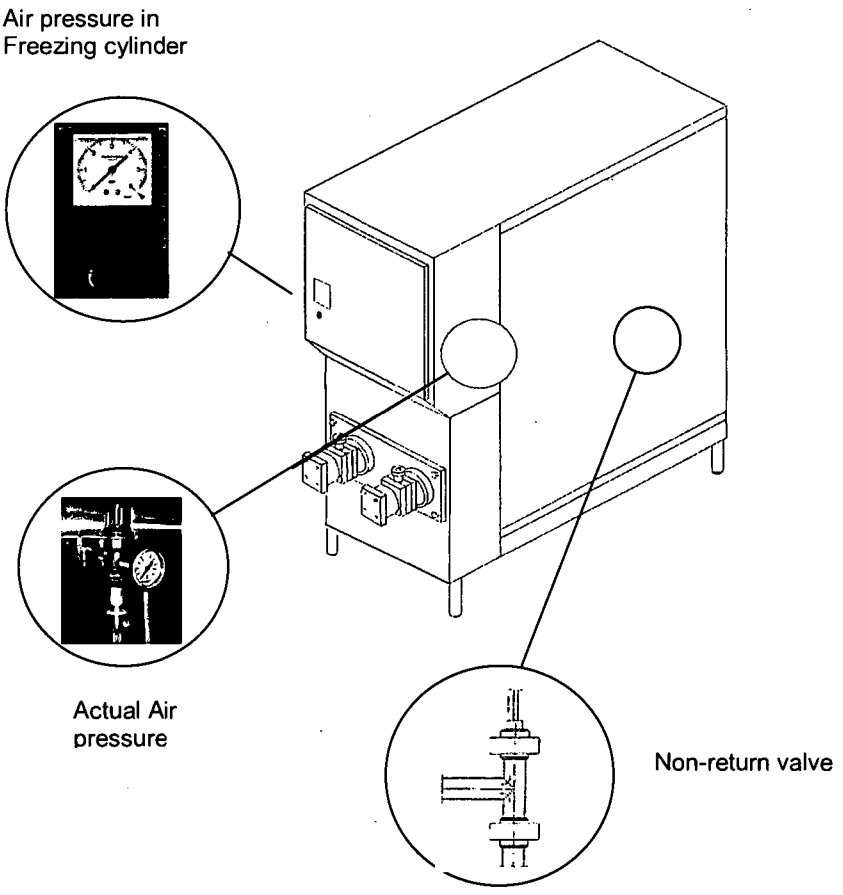

Freezing cylinder and dasher

The freezing cylinder, surrounded by the cooling jacket, is made of stainless steel and is hard chromium plated on the interior surface. The freezing cylinder is closed in the heads with front - and end covers. The volume between the freezing cylinder and the cooling jacket constitutes the evaporator. Liquid refrigerant evaporating in the cooling jacket supplies the refrigeration.

In the freezing cylinder air and mix are whipped thoroughly together by the action of the dasher, which rotates in the cylinder at a comparatively high speed, serves two purposes. First it performs the just mentioned whipping. Secondly it constantly scrapes off the ice cream, which freezes on to the cylinder wall. For this purpose the dasher is equipped with a set of scraper blades, hinged in such a way that they scrapes off the ice cream, continuously as it freezes on to the inside cylinder wall.
Simultaneously the mix is cooled down and partly frozen by the contact with the refrigerated cylinder wall.

Air/mix in the freezing cylinder will give some of its heat to the refrigerant in the surrounding cooling jacket, with which the air/mix is cooled down to cold ice cream and the refrigerant evaporates to condense later in the condenser.

Change of this condition for the refrigerant takes place at a temperature, that depends on the actual evaporating pressure in the cooling jacket.

The freezer is mounted with a cream pump that will forward the finished product from the outlet of the cylinder to the discharge piping.

The refrigerating system

The function of a refrigerating system is based upon physical changes, the heat is used for an evaporation of the liquid (refrigerant) and the heat is emitted when the gas is condensing. These changes happen at temperature and pressure conditions, which are mutually dependent.

The suction side of the refrigerating compressor is connected to the top of the freezing jacket surrounding the freezing cylinder.
The suction line passes through the suction accumulator and the Danfoss main valve (evaporation pressure regulator).

The discharge side of the compressor is connected to a water-cooled condenser. The hot gas passes through the oil separator, which brings back the oil from the discharge line to the compressor, where it belongs. The sight glass gives a clear visual indication of the function of this system. In this way the freezing jacket is kept practically free of oil, which is of utmost importance to maintain best possible freezing capacity.
In the condenser the condensing heat is transferred to the cooling water, the amount of which is controlled by the automatic water-regulating valve.

From the condenser the now liquefied refrigerant flows through the liquid line with the suction accumulator a heat exchanger, built in the suction accumulator, in counter-flow to the gas in the suction line, a filter, and through a solenoid valve, a sight glass, to the thermo expansion valve, the bulb, which is clamped to the suction line.

Stopping the cooling compressor closes the solenoid valve, which closes for the supply of refrigerant to the evaporator. The cooling compressor still runs for a few seconds (can be adjusted) in order to drain the refrigerant off the evaporator. Stopping the compressor opens the solenoid valve, which leads the hot gas from the condenser to the evaporator. This implies a quick unfreezing of the evaporator.

If the suction pressure on pressure gauge LP is lower than the pre-adjusted pressure, a capacity regulator starts to open for Hot gas to the liquid inlet to the evaporator.
When the freezer is running at low capacity and the suction pressure at LP on the compressor is lower than the pre-adjusted pressure, a capacity regulator starts to open for Hot gas into the liquid line.

The purpose of the adjustable main valve is to keep a constant pressure and thereby also a constant temperature in the freezing jacket. This pressure, which is shown by the round pressure gauge, must necessity be higher than the pressure in the suction part of the compressor, which is shown by the pressure gauge LP.

The pressure difference is created by the throttling action of the main valve. When the freezer is working at low capacity, the valve is adjusted to keep a relatively high pressure in the freezing jacket, while at the same time the compressor is able to pull the pressure after the valve down to a relatively low value. The pressure difference between the pressure/temperature manometer in front and LP is then high.

If now the refrigerating load is increased by increasing the throughput and the stiffness of the product, the main valve must be adjusted to keep a lower pressure and temperature in the freezing jacket. The throttling action is reduced and the pressure at LP rises. The pressure difference between the pressure/temperature manometer in front and LP is then low.

By further increasing and refrigerating load, the pressure difference reaches a minimum. The valve is then wide open, and the limit of the compressor capacity has been reached. It is evident that the mentioned pressure difference is a good measure for the load of the refrigerating system.

HP is a pressure gauge showing the condensing pressure and temperature. In principle this pressure should be kept as low as possible to obtain the highest possible refrigerating capacity, lowest possible consumption of electricity and lowest possible discharge temperature of the compressor.

However, this advantage results in a high consumption of cooling water. Placed in the water inlet to the condenser is an automatic water-regulating valve. It has a pressure sensitive element, which is connected to the discharge part of the compressor. The element has the function to open the valve, when pressure is built up, and let so much water flow through the condenser as necessary to keep the condensing pressure at the value which is pre-set by the adjustment knob of the water valve. When making adjustments of the water flow, the effect should be followed on the gauge HP. From the factory the valve is set to keep the condensing temperature at about 30° C-32° C. It depends very much on local conditions however, to which condensing temperature the water valve should be set. If water is plentiful, cheap and perhaps warm the condensing temperature should be kept low.

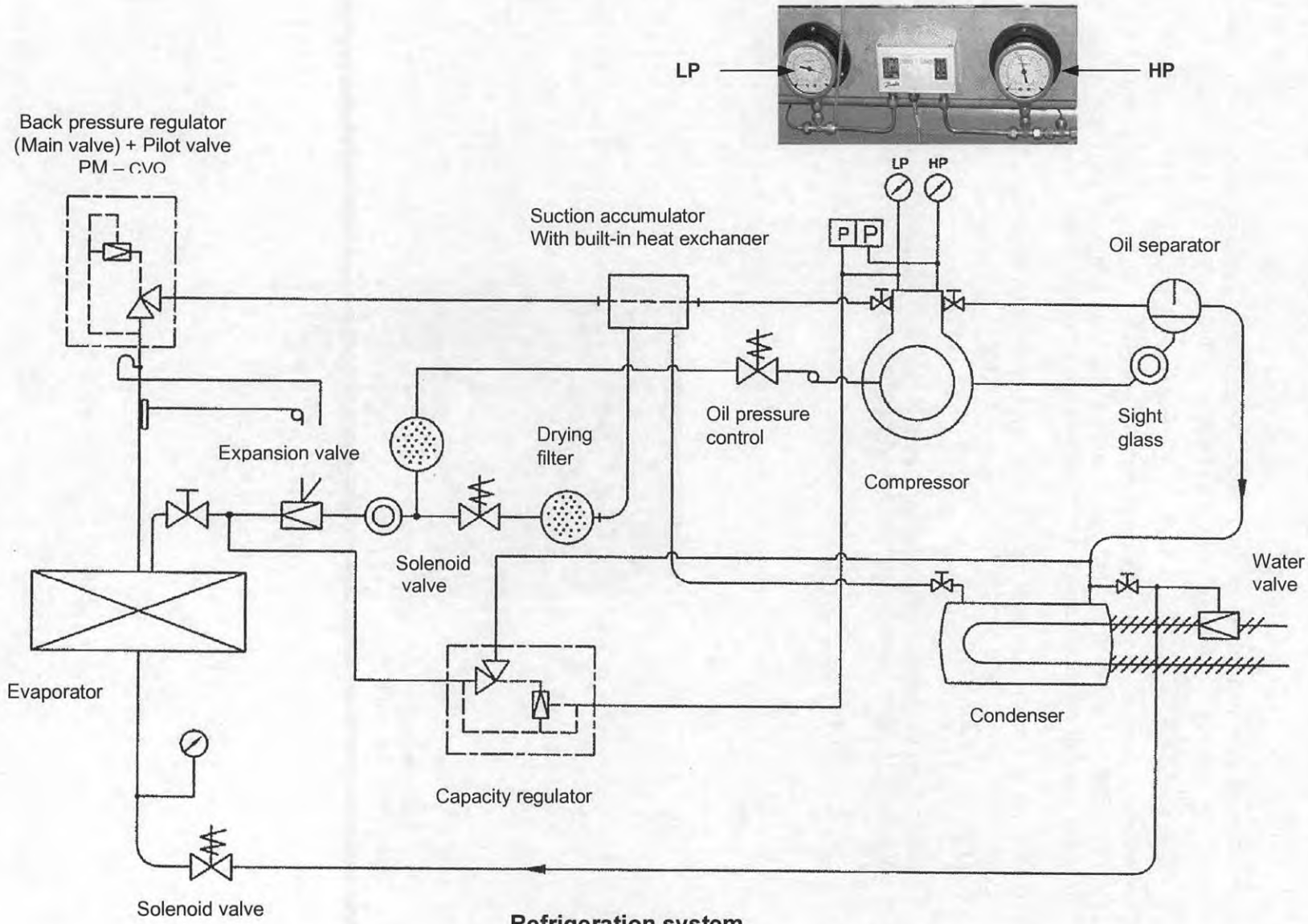

Refrigeration system

Motor Starter Protector

The motor starter protector contains both an adjustable bimetal thermal and a fixed magnetic trip device.

The factory built in instantaneous (magnetic) trip prevents damage to the load and the load conductors. The instantaneous trip is coordinated to protect at their rated withstand levels without additional adjustments.

The thermal overload protection is adjustable to match the rated current of the motor to be protected. Set the thermal current range to the full load amps of the motor. An internal differential mechanism accelerates the trip time during a phase loss.

To reset the instantaneous (magnetic) trip in the event that it trips, turn the trip switch to the left, and then turn it to the right to turn it on. Always locate and repair the cause of the problem before resetting.

The motor starter protector can also be used to Lock Out power to the motor. With the instantaneous (magnetic) trip switch in the off position place a padlock through the lock out, diameter 3.5 – 4 mm.

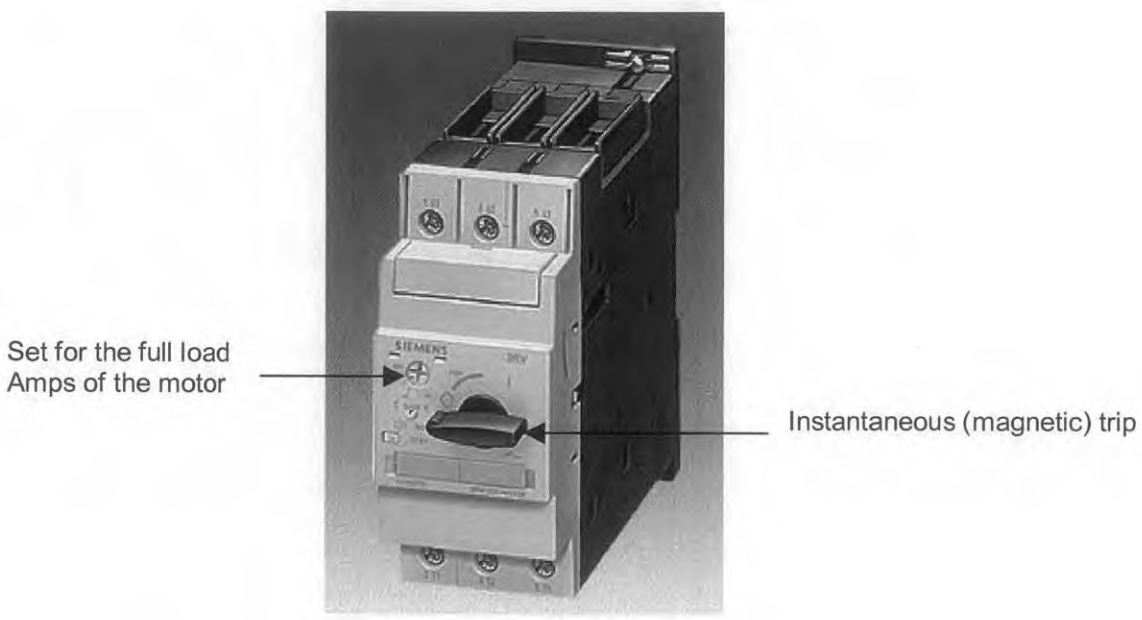

Motor starter protector

Electrical System Description

The control system on the freezer consists of two major components, the operator workstation and the programmable controller.

There are other components that are used in conjunction with the operator workstation and the programmable controller. They are transducers, transmitters, converters, powers supplies and AC inverters.

Operator Workstation

The operator workstation contains the screen and the keypads that are used to operate the freezer.

As the operator presses screen controls and the keypads, the workstation processes these commands and sends the commands to the programmable controller. The programmable controller then sends the data to the operator workstation to be displayed.

The operator workstation has an internal flash memory, which stores a program. The program is loaded from a personal computer into the workstation through a RS232 serial port located on the rear of the workstation.

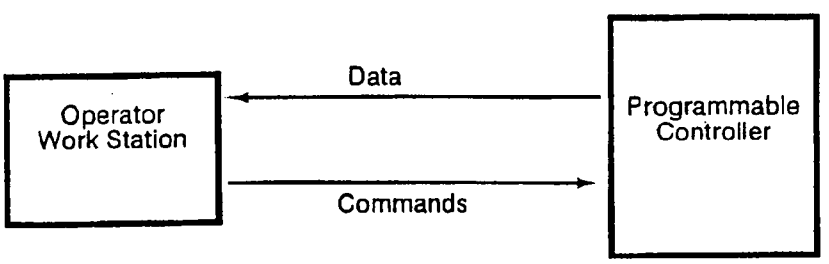

Simplified Control System

Power Supplies and Components

The control system utilizes:

1. A 24 volt power supply.
2. An AC transformer is used to convert to 230VAC.

Power Transformer

The power transformer is utilized to convert 3 phase power to 115 or 230 VAC, and 24 VAC for Danfoss back pressure regulator valve (main valve).

Control System Components

The control system utilizes various transducers, transmitters and converters.

C/I Transducer

The .C/I transducer is used to measure the dasher load. The output from the transducer is 4-20 mA.

Interface Module

The interface module controls the Danfoss Electronic back pressure regulator valve (main valve). The input to this module is 4-20 mA from the programmable controller. The output is 24 volts AC pulse cascade output.

AC Inverters

The AC inverters are mounted directly on the motors. It interfaces the control system by means of digital- and analog signals. The inverters are powered from the 3-phase main power supply.

Table of contents

Starting the freezer **3**
Stopping the freezer **3**
Day to day running of the freezer **4**
Operation Problem Solving Guide 5

This page is intentionally left blank

Starting the freezer

WARNING
No frozen water should be present in the freezing cylinder when the main motor is started, as this can damage the cylinder and dasher parts.

1. Make sure that there is an adequate amount of mix in the mix supply tank.
2. Press the Fill button.
3. Wait until mix comes out of the outlet pipe.
4. Press the Freeze button. When the Freezers status message field says "Production" the freezer is now in operation. Wait until the product comes out in a constant flow before making further adjustments.

First considerations are overrun and stiffness.
Check the overrun by weighing a known volume, for instance 1.0 l. For ice cream of normal composition the litre weight should be around 550 g.
The overrun is increased by increasing the air pressure, and vice versa.
Stiffness is depending on the refrigerant evaporating temperature and the throughput of ice cream. The lower the evaporating temperature and the lower the throughput, the stiffer the product will be. When stiffness is increased, the load on the main motor is also increased.

Note: Overloading the motor might result in a so-called "freeze-up"

Adjustments should always be made one at a time, and sufficient time should be allowed for observation of the effect, before the next adjustment is made.

When ice cream outlet temperature goes lower than –6°C to –7°C, be careful not to have a "freeze-up".

Stopping the freezer

Press the Stop button.

The Freezer will now shut down refrigeration, activate Hot-gas and after a short while stop the pumps.

The Dasher will continue to run until the Dasher shutdown level has been reached.

Day to day running of the freezer

The freezer should produce ice cream with uniform stiffness and overrun. It should be possible to obtain the desired values by using the controls on the freezer correctly. It is essential for close overrun control, that the pressure in the inlet of the mix pump is constant and positive. In this way intake of false air is avoided, through possible leaks in the mix line.

The experienced operator always keeps a keen eye on his instruments, because they reflect the inner life of the freezer. The air pressure gauge must be rock-steady, and response to adjustments of the air pressure must be immediate. If also the non-return valve is in good condition, one can be reasonably sure, that the air system is in order.

The Motor load screen on operating panel shows the load condition of the main driving motor. The motor load depends on, how hard freezing is, i.e. how low the refrigerant evaporating temperature is, and how high the throughput is. When adjusting the refrigerant temperature, or the throughput, downwards, follow the increase of the ampere reading.
There is always a potential risk of overloading the motor. Eventually the V-belts may slip or the thermal overload protection may stop the motor. In either case a "freeze- up" is a reality.

The compound gauge shows both the evaporating pressure and the evaporating temperature. For the operation of the freezer, only the evaporating temperature is of interest. It is not possible to say, what the evaporating temperature should be. The lower throughput, the stiffer the ice cream the lower freezing point of the mix the lower the evaporating temperature has to be.

On the following two pages some typical questions and answers are tabulated.

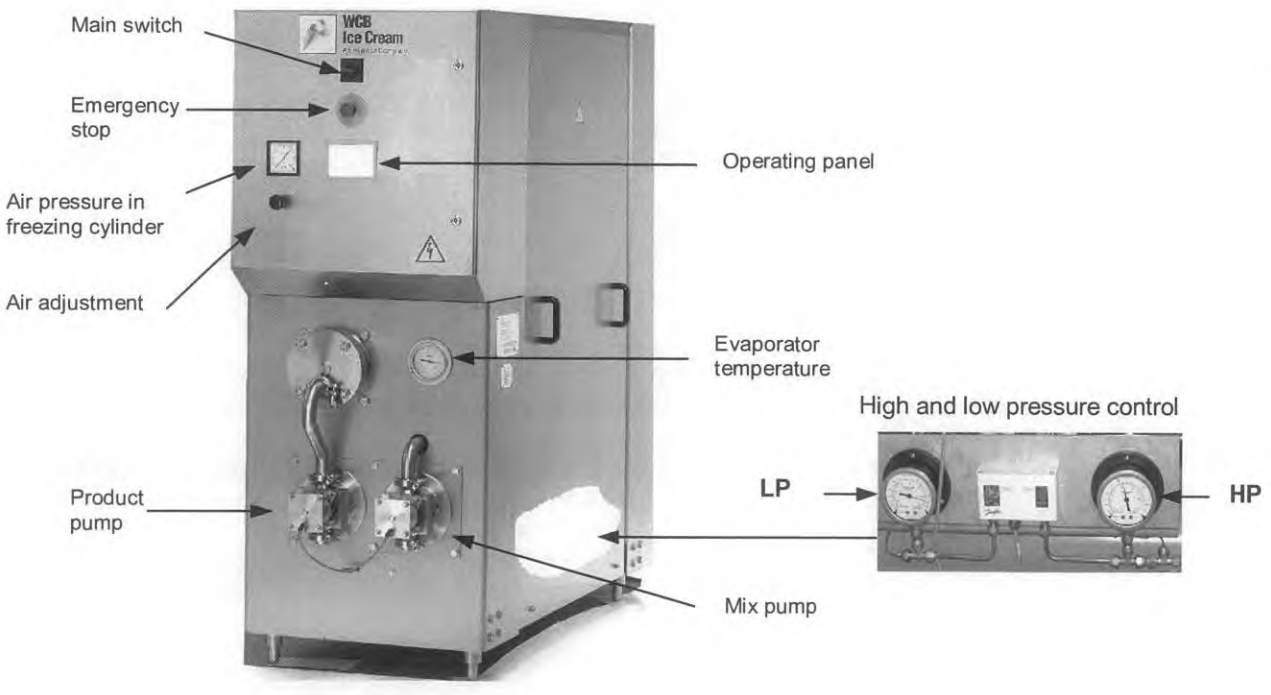

Operation Problem Solving Guide

Troubleshooting			
Problem	Cause		Problem solution
Product too soft	Evaporating temperature too high	Back pressure regulating not opened enough	Open valve to lower evaporating temperature
		Compressor loaded to full capacity	Reduce pump capacity
		Setting of thermo expansion valve incorrect	Readjust valve **See valve instructions included**
	Scraper blades worn		Recondition blades.
	Mix temperature too high		Reduce mix temperature
	Refrigerant charge insufficient		Replenish refrigerant charge. **Refrigerant type indication is stated in Machine Specifications**
	Freezing point of mix too low		

Trouble shooting			
Problem	Cause		Problem solution
Overrun too low	Air pressure too low		Adjust airflow regulator
	Finished product too cold or too warm		Try with different product outlet temperatures
	Lack of correct overrun additives		
Overrun too high	Air pressure too high		Adjust airflow regulator
	Air leaks in the mix		Installation
	Too much rework in the mix tank		Use only freshly prepared mix
Overrun unsteady	Air leaks in the mix		Installation
	Too much rework in the mix tank		Use only freshly prepared mix
Air slugs in the finished product	Too much rework in the mix tank		Use only freshly prepared mix
	Poor air holding ability of the mix		
	Entering mix too cold		

Table of contents

User interface Program Loading..... 3
Unit set up when unit is new or any time software is installed..... 3

Operating manual 1-53

User interface Program Loading

Connect a laptop to the Pro-face panel using the USB serial cable.

Open the Pro-face application software.

Select the MF-program.

Go to the project menu and select "Transfer".

In the Transfer menu, select "Send".

The operator panel program is now downloaded to the panel.

Unit set up when unit is new or any time software is installed

The following parameters need to be entered when the unit is new or any time software is installed in the in the programmable controller.

1. Enter the following parameters.

- General Parameters.
- CIP Parameters.
- High and Low Mix Flow Rate Parameters.
- High and Low Motor Load Parameters.

Table of contents

Manual preface 2
Passwords and operating levels 3

Section 1 – Operator Level 4
Production on viscosity 4
Production on ice cream temperature 8
Cleaning and sanitizing 12
Handling recipes 14
The alarm screen 15
The main menu 17
Production data 18

Section 2 – Super User Level 19
Setting Product related Parameters 19
Setting Cream Function related Parameters 21
Setting CIP and Sanitize Parameters 23
Alarm Set-up 24
Adjusting Overrun Control Parameters 25
Adjusting Overrun Control Parameters 25
Overrun Set-up 26
Adjusting Mix flow-rate Control loop Parameters 27
Mix Flow rate Tuning 28
Adjusting Viscosity Control loop Parameters 29
Motor Load Tuning 30
Adjusting Cylinder Pressure Control loop Parameters 31
Cylinder Pressure Tuning 32
Adjusting Product Temperature Control loop Parameters 33
Product Temperature Tuning 34
Limiting Operator adjustable set points 35
Set point High/Low 35
Set point High/Low 36
General Set-up 37
General Set-up 38
Dasher Settings: 38
Hot Gas Settings: 39
0 % Overrun Settings: 39
Pressure Settings: 40
Mix Flow Filling Setting: 41
Mix Flow Rate Control: 42
Calibration 43
Calibration 44
Mix Pump Calibration 46
Calibration Procedure 47

Section 3 – Master Level 48
Using the Test Screen 49
Test 49
Test 50

Operating manual MF Freezer GA

Manual preface

Thank you for choosing the MF GA freezer/Upgrade Kit

This manual describes the functions of the freezer's control system.

The manual is divided into 3 sections: The operator level, the super user level and the master level.

Each section is independent from each other and has few references to the other sections. Therefore it is possible for instance to copy only the operator level section and distribute it to your operators. In that way they will have a simple operation manual without having to read through the all the complicated sections dealing with maintenance parameter settings.

Furthermore each paragraph in the sections is made as "stand alone", so tiresome paging through several paragraphs are avoided.

We hope that this manual will be useful to you. If you have corrections or suggestions on how to improve the manual, please contact the Technical Documentation Department at WCB Ice Cream.

Telephone:	+45 87 41 20 00
Fax:	+45 87 41 20 01
Email:	WCBICE@wcbicecream.dk

Operating manual MF Freezer GA

Passwords and operating levels

The operation of the freezer is divided into 3 levels separated by passwords. The passwords will be handed over in a separate envelope. Before running the unit you must consider who should be entitled to enter the higher levels of operation and distribute the passwords accordingly.

Section 1 - Operator level

The first level is the operator level where it is possible to operate the machine, change recipes and check Alarms.

Adjustment of product and machine settings is not available.

Section 2 - Super User level

The second level is the super-user level. The facilities are the same as mentioned under the operator level, but additionally it is possible to adjust product settings, make recipes, and adjust various machine settings.

The super-user password will disable itself after 5 minutes.

Section 3 - Master level

The third level is the master level. The facilities are the same as mentioned under the super-user level, but, additionally it is possible to reset scheduled maintenance alerts, test the control system, and make a refrigerant pump down.

The master password will not disable itself and must be disabled by keying an invalid password.

Section 1 – Operator Level

Production

Production on viscosity

The production screens are the normal main screens of the MF freezer. On these screens it is possible to operate the freezer and gain access to alarms and recipe selection just by pressing one button. There are 2 production screens:
One for running the freezer on viscosity (motor load on dasher) and one for running the freezer on ice cream temperature. Changeover from one production screen to another is done automatically when refrigeration control method is selected in the product menu.

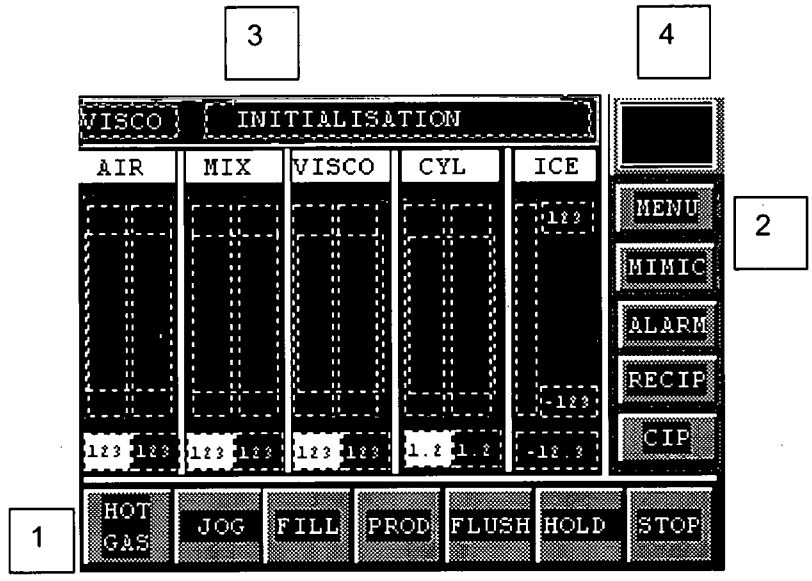

This screen is the normal production screen when the freezer is set-up for viscosity production. The screen is divided into the status indication part, the controller area, the main command panel and the operator navigation panel.

Controller Area

Overrun controller:

This controller is maintaining the requested amount of air dosed into the ice mix. The white field with black numbers is the set point. Touching this white area will bring up the data entry screen where it is possible to change the set point. The white numbers on a black background is the measured value. The value is in percent just as the set point. The bar graphs are showing the set point (white bar graph) and the measured value (grey bar graph). If you press the bar graph area you will enter into the overrun set-up screen, where it is possible to adjust parameters of the overrun controller. Please note that either the super user - or the master password has to be enabled in order to enter into the set-up screen.

Mix flow rate controller

This controller is maintaining the requested mix flow through the freezer. The white field with black numbers is the set point. Touching this white area will bring up the data entry screen where it is possible to change the set point. White numbers on a black background is the measured value. The value is in litres per hour, just as the set point. The bar graphs are showing the set point (white bar graph) and the measured value (grey bar graph). If you press the bar graph area you will enter into the mix flow set-up screen, where it is possible to adjust parameters of the mix flow controller.

Please note that either the super user password or the master password has to be enabled in order to enter into the set up screen.

Viscosity Controller

This controller is maintaining the requested stiffness of the product by measuring the load of the dasher motor and comparing it to the set point. A high motor load means a stiff (cold) product, while a low motor load means a soft (warm) product. The actual product temperature can be read on the cream temperature indicator.
The white field with black numbers is the set point. Touching this white area will bring up the data entry screen where it is possible to change the set point.. The white numbers on a black background is the measured value. The value is in motor load in %, just as the set point. The bar graphs are showing the set point (white bar graph) and the measured value (grey bar graph). If you press the bar graph area you will enter into the viscosity controller set-up screen where it is possible to adjust parameters of the controller. Please note that either the super user or the master password has to be enabled in order to enter into the set-up screen.

Cylinder pressure controller:

This controller is maintaining the requested cylinder pressure inside the freezer barrel by comparing the measured pressure to the set point. The speed of the product pump will be adjusted according to the difference between the two values. The white field with black numbers is the set point. Touching this white area will bring up the data entry screen where it is possible to change the set point. The white numbers on a black background is the measured cylinder pressure in bar. The bar graphs are showing the set point (white bar graph) and the measured value (grey bar graph). If you press the bar graph area you will enter into the cylinder pressure controller set up screen, where it is possible to adjust parameters of the controller. Please note that either the super user or the master password has to be enabled in order to enter into the set up screen.

Product temperature indicator:

This indicator is showing the current ice cream temperature. The white numbers on a black background is the measured temperature in Celsius

1. Main command panel

The main command panel is separated from the controller area by a blue line. Inside this blue line the selected recipe name is displayed. The main command panel is where the various daily functions of the freezer are started and stopped. Seen from left to right the functions are:

Hot gas:
Pressing this button will initiate the defrosting sequence. The hot gas valve will open and the freezer will defrost until the defrost timer expires. The hot gas button will light up in red and the status indicator will write "**defrost**" for as long as the sequence is running.

Jog:
A push on this button will make the dasher run for about four seconds. When the dasher is running the button will light up in green.

Fill:
By pressing this button you will initiate the filling sequence. There are 2 ways of filling, depending on freezer set-up.
One method of filling is to lead mix into the freezing cylinder until the general cut in pressure set point is reached.
The other method is to measure the mix flowing into the freezing cylinder by means of a mix flow meter. Filling will then be complete when the mix flow filling level set point is reached.
For as long as the filling mode is enabled the status indicator till say "**Filling**". When filling pressure, or mix flow level has been reached the status indicator will change to "**Filled**" thus indicating that the freezer is ready for production. If the max filling time expires before the filling set point is reached, filling will be aborted and the status indicator will say "**Idle**" instead of "**Filled**".
Filling can be stopped manually by pressing the red stop button.

Freeze:
Pressing this button will start the freezing cycle if the filling has been completed successfully. If not the filling sequence will be started first. A filling success will then initiate freezing automatically.
Freezing can be stopped manually by pressing the red stop button. As long as the freezer is freezing the status indicator will say "**Freezing**". 6 seconds after the dasher is started, the motor load is stored. When the motor load reaches the initial motor load plus threshold, the freezer will go into production.
The status indicator changing from "**Freezing**" to "**Production**" will indicate change over from freezing to production.
Freezing or production can be stopped manually by pressing the red stop button:**Flush.**
When the freezer is in idle mode, pressing this button will turn on the optional booster pump and open the pump CIP by-pass covers thus allowing for a rapid flushing of the freezer.
If the freezer is in production pressing the flush button first time will turn off the refrigeration. This initial flush uses the pumps on the freezer to push the stiff product through the discharge lines.
When the product becomes fluid enough for the booster pump to pump it through the discharge lines the flush button can be pressed a second time. This will turn off the pumps on the freezer and open the CIP by-pass covers. The dasher will continue to run. This secondary flush, pumps a much greater volume of rinse water through the freezer and will flush out the product much faster.
Pressing flush a third time will return the freezer into filling mode and then to production. Great care must be taken to ensure that no water is present inside the freezer when this happens.

Hold:
When the hold key is pressed the freezer will be placed in hold mode. If the freezer was in freeze mode when the hold key was pressed, the freezer may be placed in the freeze mode again without going through filling again if the dasher was not stopped.
If dasher has stopped rotating, the unit will go through the fill mode before going into freeze mode again.
If the freezer is in fill mode when the hold key is pressed, the filling process will be paused until the operator presses the hold key again to resume the filling process.
If the unit is in CIP mode when the hold key is pressed the CIP mode will be suspended.

Stop:
Pressing this button will initiate a shutdown of the freezer if it is in the freeze -, fill -, production -, sanitize - or CIP mode.

2. Operator navigation panel

This panel is used for calling up various useful features of the Operator panel.

Menu:
This button is used for jumping to the main menu screen.

Mimic:
Pressing this button will bring up a graphical representation of the functions of the freezer.

Alarm:
Pressing this button will bring up the alarm screen, where a specific alarm can be checked.

Recipe:
Pressing this button will bring up the recipe screen, where it is possible to select, change, save and activate a recipe.

CIP:
Pressing this button will bring up the CIP screen, where it is possible to activate cleaning and sanitizing of the machine.

3. Status indicator

This area is always reporting the actual status of the freezer in plain text.

4. Alarm Indicator

When an alarm occurs this indicator will be highlighted and an A appears on the indicator. By pressing the alarm button it is possible to see the actual reason for the alarm.

Production on ice cream temperature

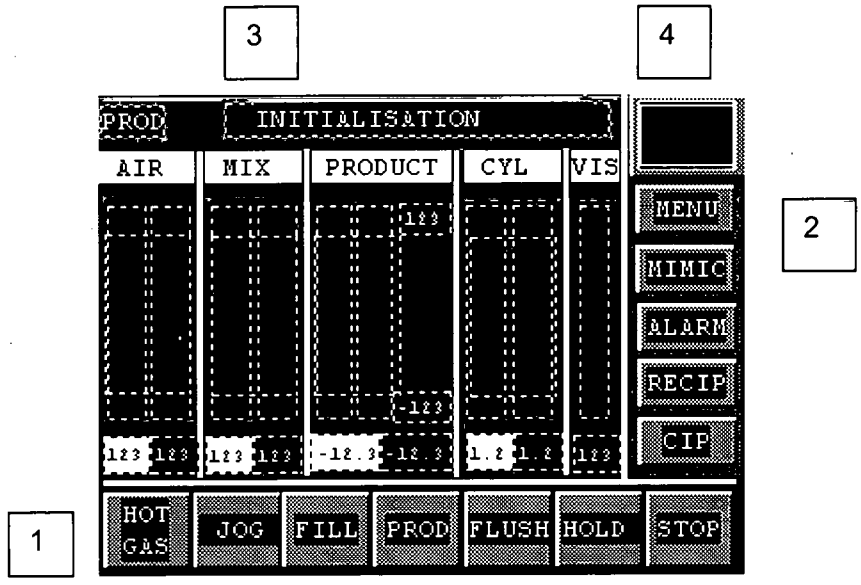

This screen is the normal production screen when the freezer is set-up for production on ice cream temperature.
The screen is divided into the status indication part, the controller area, the main command panel and the operator navigation panel.

Controller Area

Overrun controller:

This controller is maintaining the requested amount of air dosed into the ice mix. The white field with black numbers is the set point. Touching this white area will bring up the data entry screen where it is possible to change the set point. The white numbers on a black background is the measured value. The value is in percent just as the set point. The bar graphs are showing the set point (white bar graph) and the measured value (grey bar graph). If you press the bar graph area you will enter into the overrun set-up screen, where it is possible to adjust parameters of the overrun controller. Please note that either the super user - or the master password has to be enabled in order to enter into the set-up screen.

Mix flow rate controller

This controller is maintaining the requested mix flow through the freezer. The white field with black numbers is the set point. Touching this white area will bring up the data entry screen where it is possible to change the set point. White numbers on a black background is the measured value. The value is in litres per hour, just as the set point. The bar graphs are showing the set point (white bar graph) and the measured value (grey bar graph). If you press the bar graph area you will enter into the mix flow set-up screen, where it is possible to adjust parameters of the mix flow controller.

Please note that either the super user password or the master password has to be enabled in order to enter into the set up screen.

Ice Cream Temperature Controller:

This controller is maintaining the requested stiffness of the product by measuring the product temperature at the freezer barrel outlet and comparing it to the set point.

The backpressure control valve will act on the difference. If there is a difference the valve will open up if the actual temperature is bigger than set point and close if the actual temperature is smaller than the set point.

The white field with black numbers is the set point. Touching this white area will bring up the data entry screen where it is possible to change the set point. The yellow numbers on a black background is the measured value. The value is in Celsius.

The bar graphs show the set point (white bar graph) and the measured value (grey bar graph).

If you press the bar graph area you will enter into the Ice Cream Controller set-up screen where it is possible to adjust parameters of the controller. Please note that either the super user or the master password has to be enabled in order to enter into the set-up screen.

Cylinder pressure controller:

This controller is maintaining the requested cylinder pressure inside the freezer barrel by comparing the measured pressure to the set point. The speed of the product pump will be adjusted according to the difference between the two values. The white field with black numbers is the set point. Touching this white area will bring up the data entry screen where it is possible to change the set point. The white numbers on a black background is the measured cylinder pressure in bar. The bar graphs are showing the set point (white bar graph) and the measured value (grey bar graph). If you press the bar graph area you will enter into the cylinder pressure controller set up screen, where it is possible to adjust parameters of the controller. Please note that either the super user or the master password has to be enabled in order to enter into the set up screen.

Motor Load Indicator:

This indicator is showing the current load on the dasher motor.
The white numbers on a black background is the measured motor load in percent.

1. Main Command Panel

The main command panel is separated from the controller area by a blue line. Inside this blue line the selected recipe name is displayed. The main command panel is where the various daily functions of the freezer are started and stopped. Taken from left to right the functions are:

Hot Gas:
Pressing this button will initiate the defrosting sequence. The hot gas valve will open and the freezer will defrost until the defrost timer expires. The hot gas button will light up in red and the status indicator will write "defrost" for as long as the sequence is running.

Jog:
A push on this button will make the dasher run for about four seconds. When the dasher is running the button will light up in green.

Fill:
By pressing this button you will initiate the filling sequence. There are 2 ways of filling, depending on freezer set up. One method of filling is to let mix into the freezing cylinder until the general cut in pressure set point is reached. The other method is to measure the mix flowing into the freezing cylinder by means of a mix flow meter. Filling will then be complete when the mix flow filling level set point is reached.
For as long as the filling mode is enabled the status indicator till say "**Filling**". When filling pressure, or mix flow level has been reached the status indicator will change to "Filled" thus indicating that the freezer is ready for production.
If the max filling time expires before the filling set point is reached, filling will be aborted and the status indicator will say "**Idle**" instead of "**Filled**".
Filling can be stopped manually by pressing the red stop button.

Freeze:
Pressing this button will start the freezing cycle if the filling has been completed successfully. If not the filling sequence will be started first. A filling success will then initiate freezing automatically.
Freezing can be stopped manually by pressing the red stop button. As long as the freezer is freezing the status indicator will say "**Freezing**". 6 seconds after the dasher is started, the motor load is stored. When the motor load reaches the initial motor load plus threshold the freezer will go into production.
The status indicator changing from "**Freezing**" to "**Production**" will indicate changeover from freezing to production.
Freezing or production can be stopped manually by pressing the red stop button.

Flush:
When the freezer is in idle mode, pressing this button will turn on the optional booster pump and open the pump CIP by-pass covers thus allowing for a rapid flushing of the freezer.
If the freezer is in production pressing the flush button first time will turn off the refrigeration. This initial flush uses the pumps on the freezer to push the stiff product through the discharge lines.
When the product becomes fluid enough for the booster pump to pump it through the discharge lines the flush button can be pressed a second time. This will turn off the pumps on the freezer and open the CIP by-pass covers. The dasher will continue to run. This secondary flush, pumps a much greater volume of rinse water through the freezer and will flush out the product much faster. Pressing flush a third time will return the freezer to the fill mode and then to production. Great care must be taken to ensure that no water is present inside the freezer when this happens.

Hold:
When the hold key is pressed the freezer will be placed in hold mode. If the freezer was in freeze mode when the hold key was pressed, the freezer may be placed in the freeze mode again without going through filling again if the dasher was not stopped.
If dasher has stopped rotating, the unit will go through the fill mode before going to freeze mode again.
If the freezer is in filling mode when the hold key is pressed, the filling process will be paused until the operator presses the hold key again to resume the filling process.
If the unit is in CIP mode when the hold key is pressed the CIP mode will be suspended.

Stop:
Pressing this button will initiate a shutdown of the freezer if its in the freeze, fill, production, sanitize or CIP mode.

2. Operator navigation panel

This panel is used for calling up various useful features of the Operator panel.

Menu:
This button is used for jumping to the main menu screen.

Mimic:
Pressing this button will bring up a graphical representation of the functions of the freezer.

Alarm:
Pressing this button will bring up the alarm screen, where a specific alarm can be checked.

Recipe:
Pressing this button will bring up the recipe screen, where it is possible to select, change, save and activate a recipe.

CIP:
Pressing this button will bring up the CIP screen, where it is possible to activate cleaning and sanitizing of the machine.

3. Status Indicator

This area is always reporting the actual status of the freezer in plain text.

4. Alarm Indicator

When an alarm occurs this indicator will be highlighted and an A appears on the indicator. By pressing the alarm button it is possible to see the actual reason for the alarm.

Cleaning and sanitizing

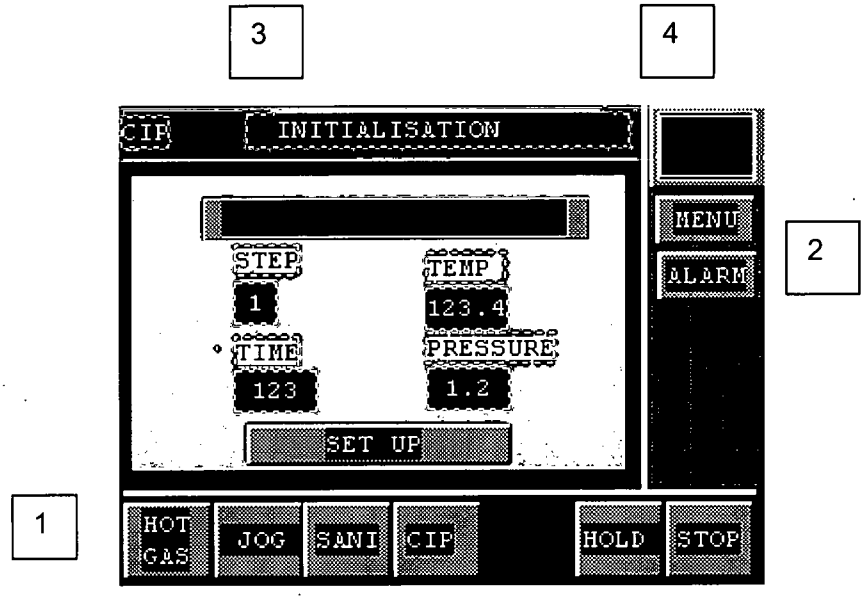

On the cleaning screen it is possible to start/stop and supervise the cleaning and sanitizing sequences.

Cleaning status

In the middle of the screen the cleaning/sanitizing status area is placed. It consists of the following items:

Cleaning Status Message Area:

The status message area tells in plain text if certain conditions have halted the cleaning. If the message area is blank when cleaning/sanitizing is on, conditions are ok and the sequences are running as scheduled.
The message area can show the following messages:

Low Pressure:
The cut-in barrel pressure defined in the General Set up Screen has not been reached and the Cleaning/sanitizing sequence is halted.

Unacknowledged:
The external digital input signal coming from a CIP plant is not on and the cleaning/sanitizing sequence is halted. If this facility is not used the digital input must be hardwired to +24V. This is done as default from the factory.

Step:

Indicates which step the cleaning/sanitizing cycle is currently in.

There are three steps:
1: General flushing time with pumps and dasher on
2: Pumps and dasher are running

Time:

Shows the remaining time of the current cleaning/sanitizing step. If time count down is halted, conditions for running the cleaning/sanitizing sequence has failed. The cause of halting can be read on the Cleaning Status Message Area.

Temperature:
Indicates the temperature at the mix inlet or product outlet depending on MF model.

Cylinder Pressure:
Indicates the current pressure inside the barrel.

Set-up:
By pressing this button the cleaning/sanitizing screen will appear on the screen if either the super user or the master password has been enabled. On the set-up screen it is possible to adjust the parameters of the cleaning/sanitizing cycles.

1. Main Command Panel

The main command panel is separated from the controller area by a blue line. Inside this blue line the selected recipe name is displayed. The main command panel is where the various daily functions of the freezer are started and stopped. Taken from left to right the functions are:

Hot Gas:

Pressing this button will initiate the defrosting sequence. The hot gas valve will open and the freezer will defrost until the defrost timer expires. The hot gas button will light up in red and the status indicator will write defrost for as long as the sequence is running.

Jog:
A push on this button will make the dasher run for about four seconds. When the dasher is running the button will light up in green.

Sani:
A push on this button will activate the sanitizing sequence.

CIP:
A push on this button will activate the cleaning sequence.

Hold:
When the hold key is pressed the cleaning and sanitizing sequences will be halted. A second press on the button will start cleaning/sanitizing again.

Stop:
Pressing this button will stop the cleaning/sanitizing sequence and bring up the production screen on the Display.

2. Operator Navigation Panel

This panel is used for calling up various useful features of the Operator Panel.

Menu:
This button is used for returning to the production screen. Please note that a running cleaning/sanitizing sequence will block this button.

Alarm:
Pressing this button will bring up the alarm screen, where a specific alarm can be checked.

3. Status Indicator

This area is always reporting the actual status of the freezer in plain text.

4. Alarm Indicator

When an alarm occurs this indicator will be highlighted and an A appears on the indicator. By pressing the alarm button it is possible to see the actual reason for the alarm.

Handling recipes

The MF freezer can hold up to 150 recipes. The data are stored in the operator interface memory. When a recipe is activated, the data are transferred from the operator panel to the PLC where they are used for adjusting the control system to the product.

On the left hand window the product names are listed. You can scroll through the listing using the arrow up and down buttons.
The current product name is listed in the white area it is possible to change the name by touching the white area. This will bring up the data entry screen.

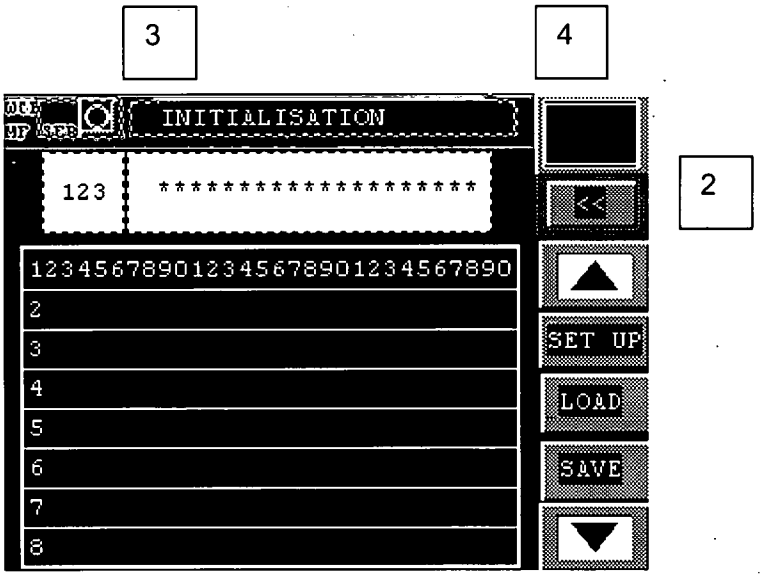

A typical way to create a recipe is first to make the freezer produce with the mix and with the selected set points. When the freezer is running stable and the product quality is good type the recipe name into the current recipe area. Then use the scroll buttons either to select an empty recipe (empty recipes are indicated by the character P and the recipe number), or an unused recipe. When the recipe location is selected press <**Save** > and all product settings are stored. Since the amount of data is considerable saving can last up to a couple of seconds.
By pressing the button <**Load**> the recipe selected in the left hand window will be transferred to The PLC. This transfer can take up to a couple of seconds too.
By pressing the button <**Set up**> the product set up screen will pop up on the screen if the super user or master password is enabled. In the product set up screen refrigeration control method can be selected and parameters having influence on how the freezer is responding to the ice mix can be set.

2. Operator Navigation Panel

This panel is used for calling up various useful features of the Operator Panel.

<<: This button is used for returning to the production screen.

3. Status Indicator

This area is always reporting the actual status of the freezer in plain text.

4. Alarm Indicator

When an alarm occurs this indicator will be highlighted and an A appears on the indicator. By pressing the alarm button it is possible to see the actual reason for the alarm.

The alarm screen

The alarm conditions are listed on this page. If on or more alarms are active the grey lamp to the left of the alarm condition will change state to red. The alarms are divided into alarms and warnings (left side) and defrost alarms (right side).

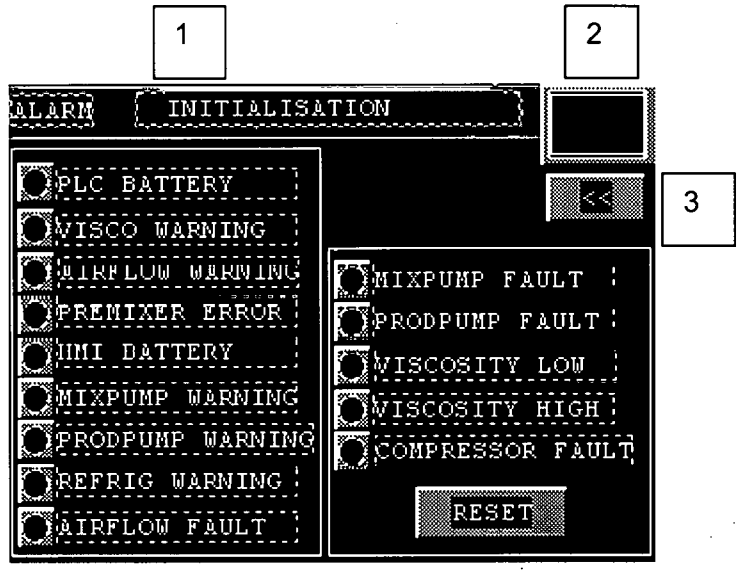

Alarms and Warnings

PLC Battery:
When the back up battery in the PLC goes low the square indicator is highlighted. Change the battery to a new as quickly as possible to avoid loss of program and data. If the main power is cut when the battery is low, program and data in the PLC will be lost.
Some PLC do not have a battery back up. Program and data are stored in a flash memory instead and thus protected from power cuts.

Visco Warning:
When the current consumption of the dasher motor reaches the motor load warning limit, the Indicator is highlighted. At the same time the opening of the refrigeration Control valve is reduced to keep the unit from freezing up. When the current consumption goes below the warning limit minus dead band the alarm disappears and the refrigeration control valve resumes normal operation.

Air Flow Warning:
When the difference between the overrun set point and the measured values exceeds the Airflow deviation set point, the indicator is highlighted.
When the difference drops below the deviation set point the alarm is cancelled.

Premixing Fault:
When the healthy signal from the optional pre-mixer inverter and circuit breaker is missing the indicator is highlighted. When the signal is restored the alarm disappears.

HMI Battery:
When the battery in the HMI goes low in capacity the grey indicator is highlighted. The alarm disappears again when a new battery is installed. Not all operator panels require a battery.

Mix Pump Warning:
If the mix pump is running at min or max speed the indicator is highlighted. When speed increases or decreases the alarm is cancelled. This alarm is only active during production.

Product Warning:
If the product pump is running at min or max speed the indicator is highlighted. When speed increases or decreases the alarm is cancelled. The alarm is only active during production.

Refrig Warning:
If the refrigeration valve is fully opened the indicator is highlighted, when opening is reduced the alarm is cancelled. The alarm is only active during production.

Air Flow Fault:
If the airflow meter is fully opened the indicator is highlighted and an alarm is given.
When the opening drops below max, the alarm is cancelled. The alarm is only active during Production.

Defrost Alarms

Mix Pump Fault:
If the ok signal from the mix pump inverter is missing and the unit is in production the indicator is highlighted and a defrost sequence is started.
The alarm must be cancelled by pressing the reset button in the lower part of the defrost alarm area.

Product Pump Fault:
If the ok signal from the product pump inverter is missing and the unit is in production the indicator is highlighted and a defrost sequence is started.
The alarm must cancelled by pressing the reset button in the lower part of the defrost alarm area.

Viscosity Low:
If the dasher motor load drops below the minimum setting and the unit is in production the Indicator is highlighted and a defrost sequence started.
The alarm must cancelled by pressing the reset button in the lower part of the defrost alarm area.

Viscosity High:
If the dasher motor load exceeds the motor load high limit during production the Indicator turns is highlighted and a defrost sequence started.
The alarm must cancelled by pressing the reset button in the lower part of the defrost alarm area.

Compressor Fault:
If the control system of the freezer detects on of the following errors, the freezer wil stop and defrost.
The errors are:

1. High pressure in Compressor. If the cooling water supply to the machine fails, the pressure in the compressor will rise. When a too high pressure is detected by the high pressure transducer, the defrost will start
2. Low pressure in Compressor. If the oil pressure in the compressor drops below safe limit.
3. Compressor overheated. If the compressor motor is overheating.

1.Status Indicator

This area is always reporting the actual status of the freezer in plain text.

2. Alarm Indicator

When an alarm occurs this indicator will be highlighted and an A appears on the indicator. By pressing the alarm button it is possible to see the actual reason for the alarm.

3. Operator Navigation Panel

<< This button is used for returning to the previous screen.

The main menu

On the main menu screen it is possible to jump to production, set ups and alarm screen. The more delicate maintenance and set up screens are protected by password.

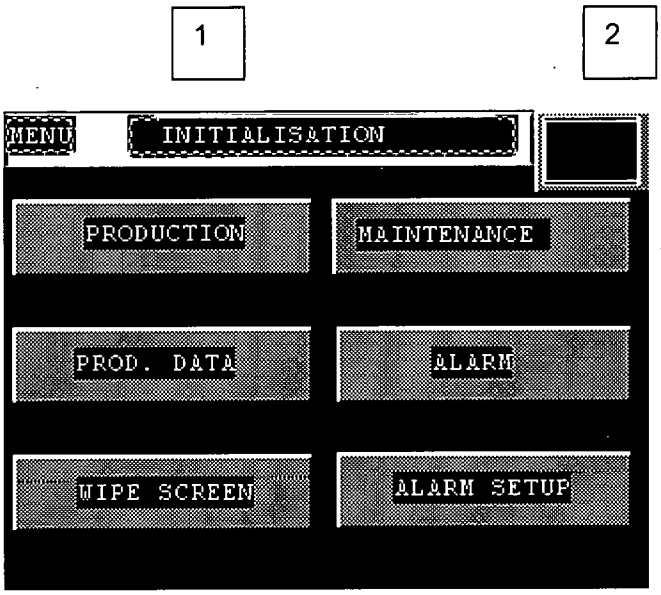

Production:
Pressing this button will bring the production screen on the display

Production Data:
Pressing this button will bring up the production data screen on the display. On this screen it is possible to check consumed mix, quantity of product, average overrun and production time.

Wipe Screen:
Pressing this button will bring up the Wipe Screen. This is used for cleaning the screen area. The Screen is best cleaned with a soft moisturized cloth.

Maintenance:
Pressing this button will bring up the maintenance main menu on the display.

Alarms:
Pressing this button will bring the alarm status screen on the display.

Alarm Set up:
Pressing this button will bring the alarm set up screen on the display if the super user or master password is enabled.

1. Status Indicator

This area is always reporting the actual status of the freezer in plain text.

2. Alarm Indicator

When an alarm occurs this indicator will be highlighted and an A appears on the indicator. By pressing the alarm button it is possible to see the actual reason for the alarm.

Production data

On this screen various useful data from the production can be seen.

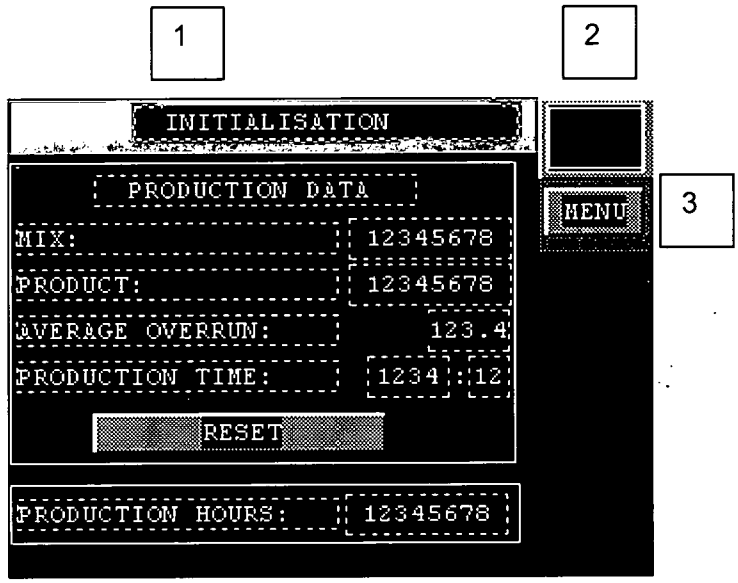

Mix:
This number shows the accumulated amount of used mix since the value was last reset.

Product:
This number shows the accumulated amount of product made by the unit since the value was last reset.

Average Overrun:
This number shows the accumulated average of overrun in the product since the value was last reset.

Production Time:
Shows how long time the unit has been in production since last reset.

<Reset>:
By pressing this button the data mentioned above will be zeroed. Normally this is done before production starts.

Production Hours:
This is the total production time of the unit. This value cannot be reset.

1. Status Indicator

This area is always reporting the actual status of the freezer in plain text.

2. Alarm Indicator

When an alarm occurs this indicator will be highlighted and an A appears on the indicator. By pressing the alarm button it is possible to see the actual reason for the alarm.

3. Operator Navigation Panel

Menu This button is used for returning to the previous screen.

Section 2 – Super User Level

This section describes the possibilities available for the super user. Please note that access to the functions described here requires enabling of the super user password.

Setting Product related Parameters

By pressing the Set-up button on the Product recipes Screen you enter into the Product Set-up screen.

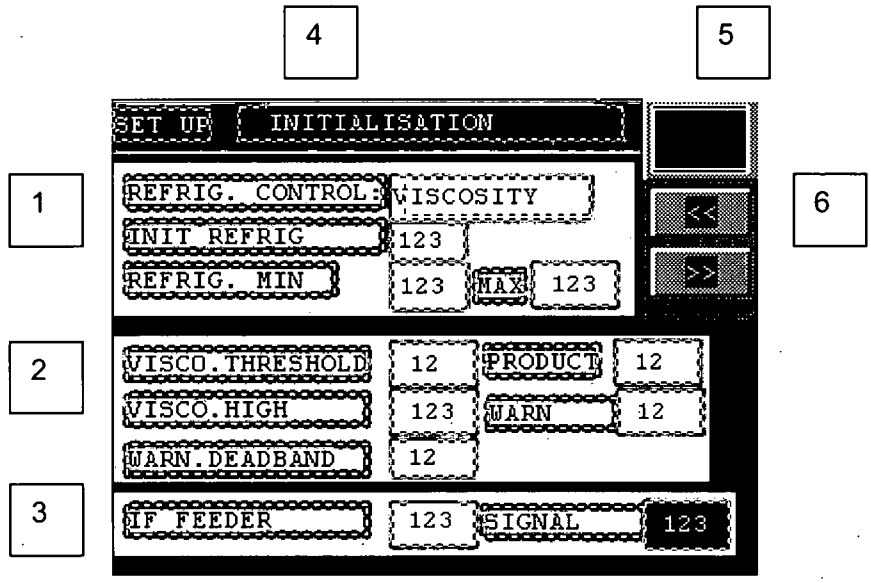

1. Refrigeration Control Parameters

These parameters have influence on how the refrigeration system is controlled.

Refrigeration Control:
By pressing the white area you can choose between producing on viscosity product temperature or evaporator pressure control.

Init Refrig %:
This parameter sets the opening of the refrigeration control valve when the freezer is in freezing mode (starting up after filling). The value should be set just high enough to produce a suction pressure of 1 bar (15Psig) when the refrigerant used is ammonia.

Refrig Min:
This parameter sets the minimum allovable opening of the back pressure valve. On Halocarbon machines with built in compressor the back pressure valve must not close fully and therefore this parameter is usually set to 10%. On NH3 machines the parameter can be set to 0%.

Max:

This parameter controls how much the viscosity or temperature controller can open the refrigeration valve during production. By reducing this value when running product at a very low capacity controller overshooting Can be limited and thus preventing the freezer from freezing up.

2. Thresholds:

Threshold is the point at which the mix pump, cream pump and overrun control loops are enabled, that is when the freezer goes from freezing to production. Depending on production mode, the control system will use either the motor load threshold (when running on viscosity) or product temperature threshold (when running on ice cream temperature)

ViscoThreshold:
Approximately 6 seconds after the Dasher motor is started, the motor load value from the current transducer is stored in the control system. When the motor load exceeds this value plus the motor load threshold the freezer will enter into production mode.

Product:
When the measured product temperature is lower than the start-up temperature minus the threshold, the freezer will enter into production mode.
Motor load limits are settings used for limiting the risk of freezing up.

Visco High:
This value is the point at which a defrost sequence will be initiated and production terminated.

Warn:
When the motor load exceeds this value the following will occur:

1. Refrigeration will be turned off.
2. The last back pressure valve setting will be reduced by 5% for when the control loop is enabled again.

Motor Load Warning Deadband:
This value determines how much the motor load warning limit the motor load must drop before the control loop is restored.

3. IF Feeder Set-up:

IF Feeder set-up is used to control a downstream WCB Ingredient Feeder.

IF Feeder Control:
This value is used for adjusting the analog speed reference signal to the Ingredient Feeder.

IF Feeder Signal:
This value shows the current speed reference signal to the Ingredient Feeder. The value is proportional to the mix flow rate.

4. Status Indicator

This area is always reporting the actual status of the freezer in plain text.

5. Alarm Indicator

When an alarm occurs this indicator will be highlighted and an A appears on the indicator. By pressing the alarm button it is possible to see the actual reason for the alarm.

6. Operator Navigation Panel

<< This button is used for returning to the previous screen.

>> This button is used to go to the Cream function setup screen

Setting Cream Function related Parameters

If the freezer has the Cream functions installed the functions can be controlled from this screen.

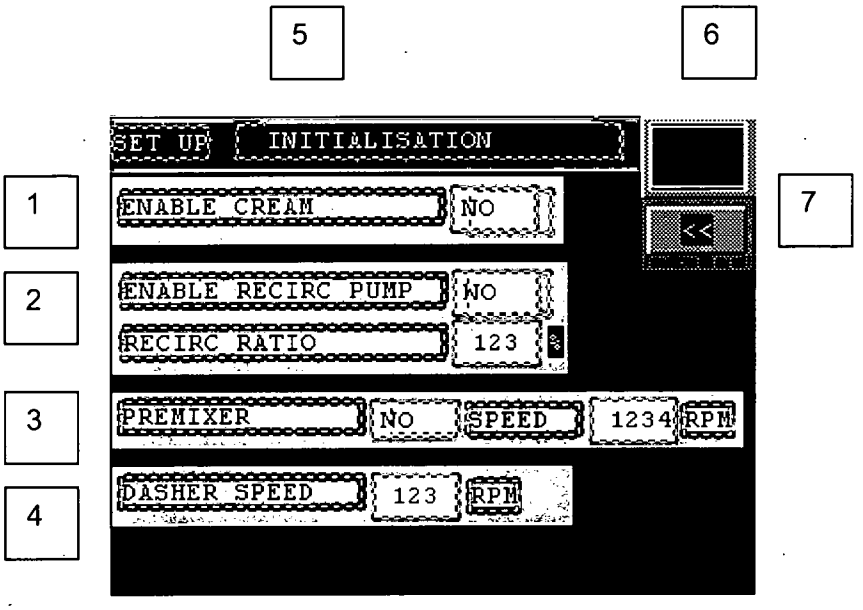

1.Enable Cream:

This button is used to activate the Cream functions. It is only possible to toggle this switch if the freezer is equipped with the Cream option.

2. Re-circulation Set-up:

Pre-mixer settings are used to control the re-circulation pump:

Enable Recirc. Pump:
This button is used to enable or disable the recirculation pump.. This is a toggle function so one press on the white will make area change from no to yes. Next press on the area will change the state from yes to no.

Recirc. Ratio:
This value is used to control the amount of recirculated product. The value is in percent of the actual capacity of the cream pump.

3. Pre-mixer Set-up:

Pre-mixer settings are used to control the pre-mixer:

Pre-mixer no:
This button is used to enable or disable the pre-mixer. This is a toggle function so one press on the white will make area change from no to yes. Next press on the area will change the state from yes to no.

Pre-mixer Speed:
This value is used to control the speed of the optional pre-mixer. The value is rpm´s.

4. Variable Dasher Speed:

This parameter is used for controlling the speed of the dasher. The value is in rpm´s.

5. Status Indicator

This area is always reporting the actual status of the freezer in plain text.

6. Alarm Indicator

When an alarm occurs this indicator will be highlighted and an A appears on the indicator. By pressing the alarm button it is possible to see the actual reason for the alarm.

7. Operator Navigation Panel

<< This button is used for returning to first set up screen.

Setting CIP and Sanitize Parameters

The CIP and sanitize set-up screen allows you to tailor suit the freezers CIP and sanitize sequences to your specific needs.

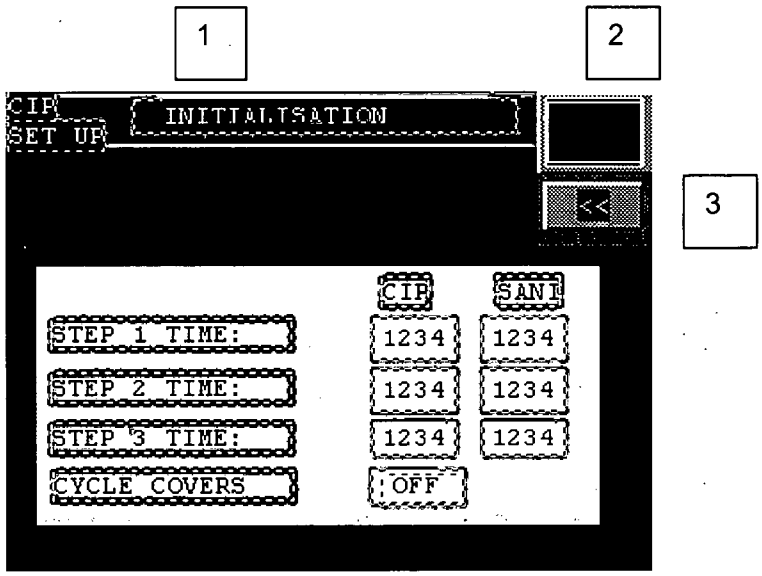

Step 1:
You adjust the time set point for CIP step 1 with this parameter. Step 1 is where the pumps and the dasher are idle, the pump covers are open, and the CIP liquid is flushing through the machine. Touch the blue area to set the time.

Step 2:
This is the time set point for CIP step 2. In this step the pumps and dasher is running. Touch the blue area to set the time.

Step 3:
This is the time set point for CIP step 3. In this step the pump covers are cycled for a better cleaning of the pumps. Touch the blue area to set the time.

Cycle Pump Covers:

By pressing this button you can select or deselect if the cycle covers function (step 3) should be in. Touch the on/off area to select or deselect.

In the area on the right of the screen you adjust the parameters related to the Sanitize sequence. The step functions are the same as described under the CIP steps. The sanitize sequence is meant to be a short sequence for letting sterilizer through the freezer just before start of production.

1. Status Indicator

This area is always reporting the actual status of the freezer in plain text.

2. Alarm Indicator

When an alarm occurs this indicator will be highlighted and an A appears on the indicator. By pressing the alarm button it is possible to see the actual reason for the alarm.

3. Operator Navigation Panel

<< This button is used for returning to previous screen.

Alarm Set-up

The alarm set-up screen allows you to enable or disable the alarms in alarm group 1 and 2. The defrost alarms cannot be disabled. See the Alarm Screen Section in this manual for a further description of the alarms.

By toggling the button the corresponding alarms will be enabled or disabled.
A white button indicates that the alarm is enabled. A grey button indicates that the alarm is disabled.

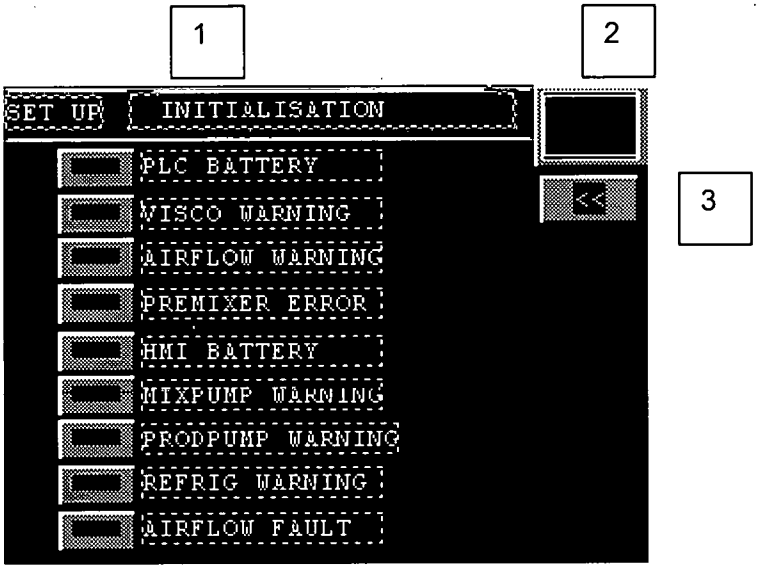

1. Status Indicator

This area is always reporting the actual status of the freezer in plain text.

2. Alarm Indicator

When an alarm occurs this indicator will be highlighted and an A appears on the indicator. By pressing the alarm button it is possible to see the actual reason for the alarm.

3. Operator Navigation Panel

<< This button is used for returning to previous screen.

Adjusting Overrun Control Parameters

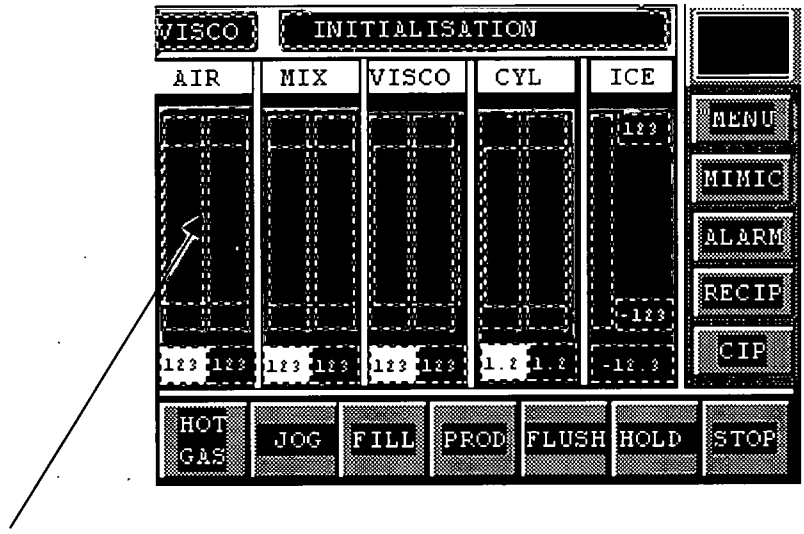

By pressing the middle of the bar graph area on the overrun controller on production screen, indicated as a rectangle on the picture above, you will enter into the overrun set-up screen where it is possible to adjust overrun parameters.

Overrun Set-up

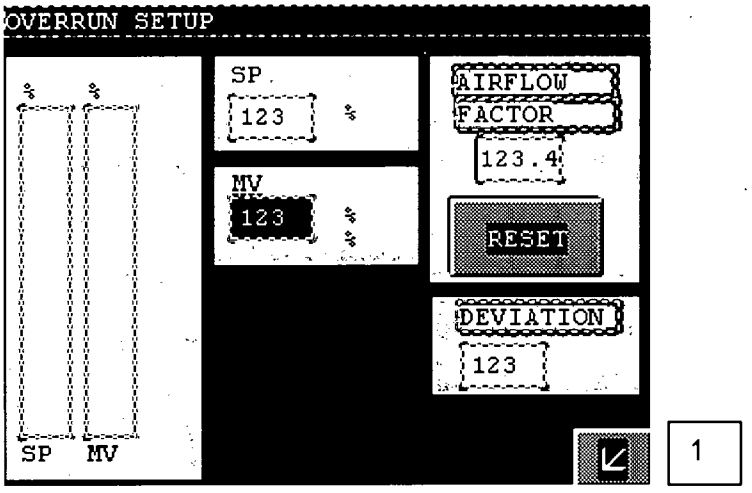

The bar graph area on the left of the screen shows the overrun set point (SP) and the current overrun measured Value (MV) in percent. Please note that even if the set point is white it is not possible to change it.

Air Flow Factor:

This parameter makes it possible to adjust the overrun so it will correspond to the control measurements you make.
To adjust note the difference between the measured overrun value on the screen and the control measurements.
Adjust the airflow factor with the difference. Make a couple of control measurements after about 5 minutes to check:

1. If the overrun is correct.

2. If you press the reset button the airflow factor will be reset to its factory preset value.

Air Flow Deviation:

This parameter controls the alarm message for airflow deviation. The value is in percent. If you for instance
Adjust the parameter to 20. The airflow deviation alarm will appear when the difference between the overrun set point and the overrun process value exceeds 20 %.

1. Press this button to return to the Production Screen

Adjusting Mix flow-rate Control loop Parameters

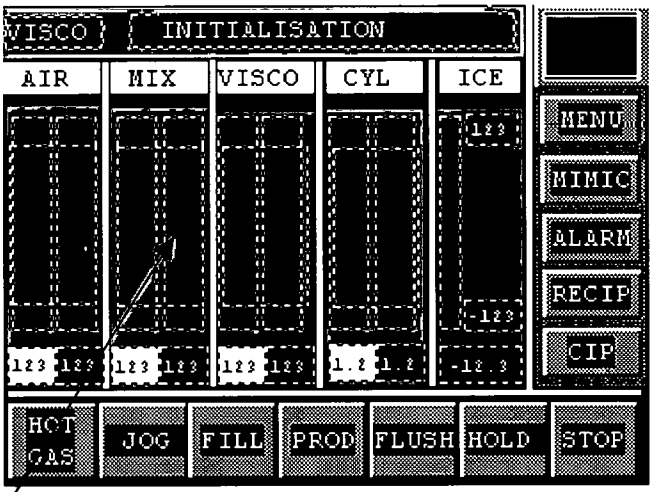

By pressing the middle of the bar graph area on the mix flow controller, indicated as a rectangle on the picture above, you will enter into the mix flow set-up screen where it is possible to adjust the various parameters related to the mix flow control loop.

Mix Flow rate Tuning

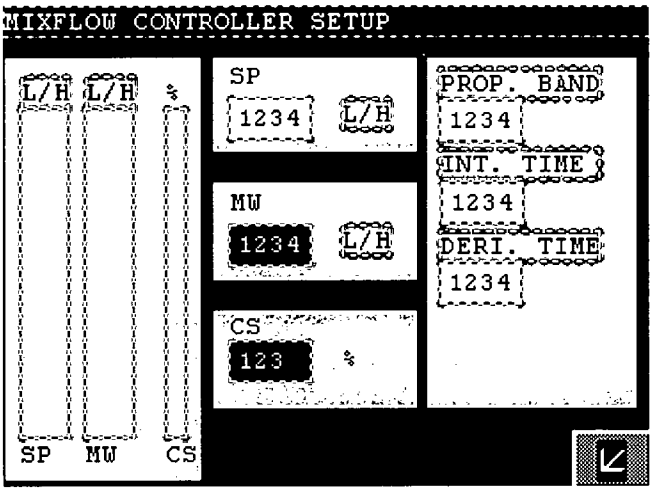

On the bar graph area on the left of the screen the set point, the current measured mix flow value and the control output to the mix pump inverter are represented.

In the middle area of the screen the same values are shown but here in engineering units. It is possible to change the white set point value by touching the white area and key in the set point you want.

Prop. Band

This parameter relates to the PID control loop of the mix flow. This value is factory set to give a smooth and stable Mix flow by speeding up or slowing down the mix pump according to the difference between set point and measured value. If you are experiencing fluctuations in the mix flow it might be necessary to adjust this parameter. If you decrease the value the control loop becomes more responsive but if you lower it too much the control loop might oscillate. If the value is too big the control loop response might be too slow.

Int. Time

This parameter relates to the PID control loop of the mix flow. This value is factory set to give a smooth and stable mix flow. If you are experiencing fluctuations in the mix flow it might be necessary to adjust this parameter. The Integration time is used to smooth out the influence of the response of the Proportional Band. The bigger the value the bigger influence on the controller response.

Deri. Time

This parameter relates to the PID control loop of the mix flow. If you are experiencing fluctuations in the mix flow it might be necessary to adjust this parameter. The derivative time is used by the controller to minimize the difference between set point and measured value. On some controllers this value is set to 0 and therefore not used. Great care must be taken when adjusting this value.

1. Press this button to return to the Production Screen

Adjusting Viscosity Control loop Parameters

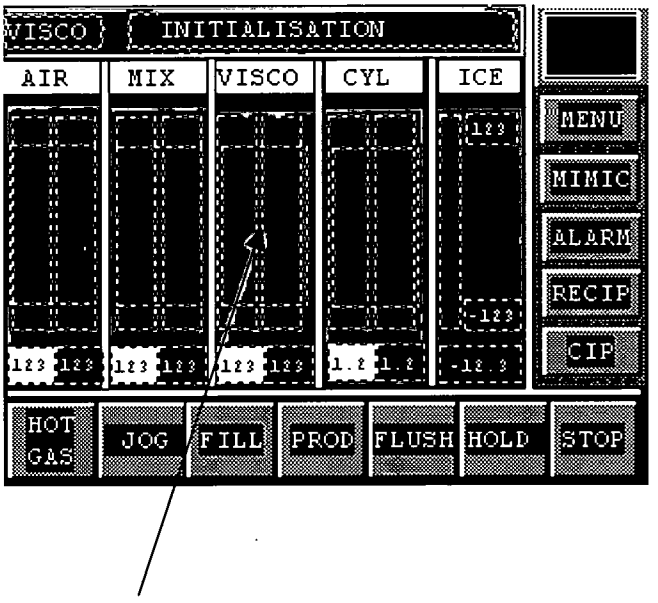

By pressing the middle of the bar graph area on the viscosity controller, indicated as a rectangle on the picture above, you will enter into the motor load set-up screen where it is possible to adjust the various parameters related to the mix flow control loop.

Motor Load Tuning

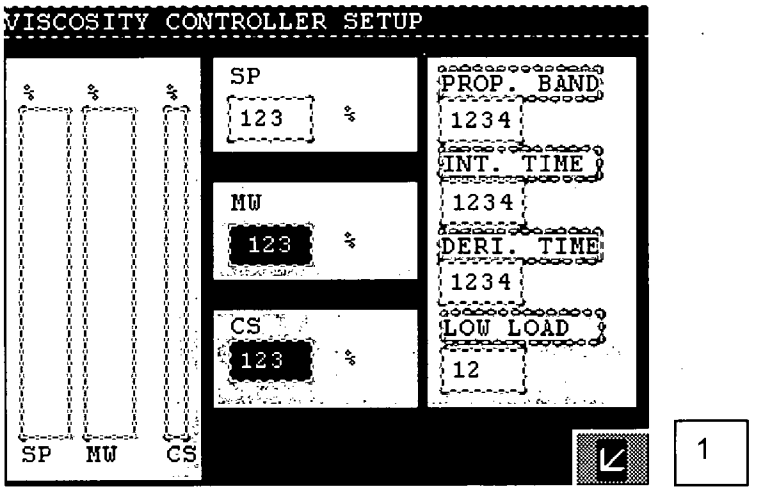

On the bar graph area on the left of the screen the set point, the current measured motor load value and the control output to the backpressure valve is represented. Please note that all bar graphs are shown as percent of full-scale range of the freezer.
In the middle area of the screen the same values are shown but here in engineering units. It is possible to change the white set point value by touching the white area and key in the set point you want.

Prop. band

This parameter relates to the PID control loop of the viscosity. This value is factory set to give a smooth and stable control of the refrigeration and thus the viscosity of the produced ice cream by modulating the backpressure control valve according to the difference between set point and measured value. If you are experiencing fluctuations in the viscosity it might be necessary to adjust this parameter. If you decrease the value the control loop becomes more responsive but if you lower it too much the control loop might oscillate. If the value is too big the control loop response might be too slow.

Int. time

This parameter relates to the PID control loop of the mix flow. This value is factory set to give a smooth and stable control. If you are experiencing fluctuations in the viscosity it might be necessary to adjust this parameter. The Integration time is used to smooth out the influence of the response of the Proportional Band. The bigger the value the bigger influence on the controller response.

Deri. time

This parameter relates to the PID control loop of the viscosity control. If you are experiencing fluctuations in the viscosity control it might be necessary to adjust this parameter. The derivative time is used by the controller to minimize the difference between set point and measured value. On some controllers this value is set to 0 and therefore not used. Great care must be taken when adjusting this value.

Low load

This parameter is the lowest tolerable motor load before the control systems decides that there is a fault on the dasher power supply, initiates a defrost sequence and shuts down the freezer. Normally this parameter should be set to a value slightly below the current read in value when the dasher is running idle.

1. Press this button to return to the Production Screen

Adjusting Cylinder Pressure Control loop Parameters

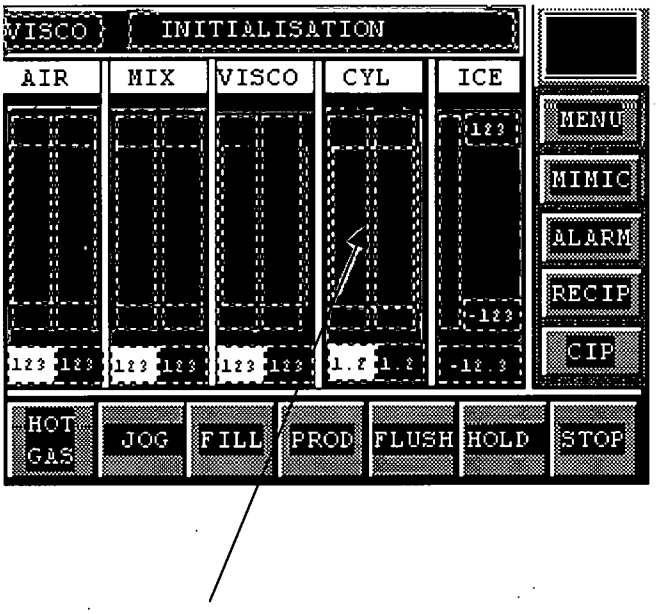

By pressing the middle of the bar graph area on the cylinder pressure controller, indicated as a rectangle on the picture above, you will enter into the Cylinder pressure set-up screen where it is possible to adjust the various parameters related to the Cylinder Pressure control loop.

Cylinder Pressure Tuning

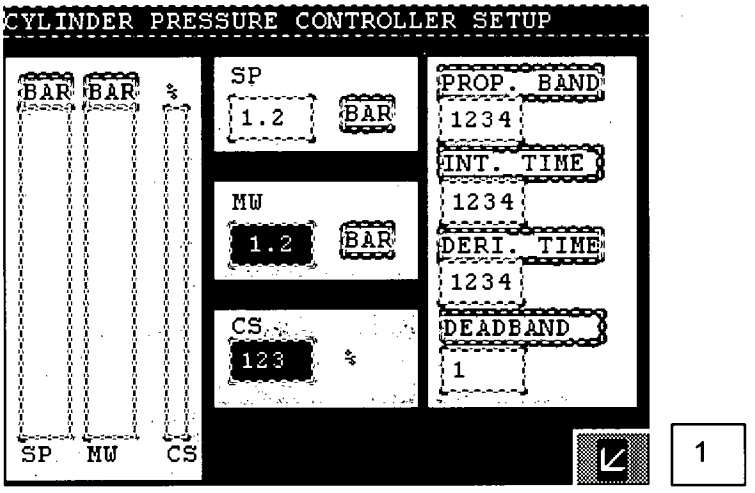

On the bar graph area on the left of the screen the set point, the current measured cylinder pressure and the control output to the product pump inverter is represented

In the middle area of the screen the same values are shown but here in engineering units. It is possible to change the white set point value by touching the white area and key in the set point you want.

Prop. band

This parameter relates to the "P" portion of the control loop of the cylinder pressure. This value is factory set to give a smooth and stable control of the flow of product through the freezer by speeding up or slowing down the product pump and thus keeping a constant pressure inside the freezing barrel. If you are experiencing fluctuations in the pressure it might be necessary to adjust this parameter. If you decrease the value the control loop becomes more responsive but if you lower it too much the control loop might oscillate. If the value is too big the control loop response might be too slow.

Int. time

This parameter relates to the "I" portion of the control loop of the cylinder pressure. This value is factory set to give a smooth and stable control. The Integration time is used to smooth out the influence of the response of the Proportional Band. The bigger the value the bigger influence on the controller response.

Deri. time

This parameter relates to the "D" portion of the control loop of the cylinder pressure control. The derivative time is used by the controller to minimize the difference between set point and measured value. On some controllers this value is set to 0 and therefore not used. Great care must be taken when adjusting this value.

Dead-band

This parameter is used to damp the response of the PID loop. The dead-band is the acceptable tolerance between set point and measured value before the control loop reacts.

1. Press this button to return to the Production Screen

Adjusting Product Temperature Control loop Parameters

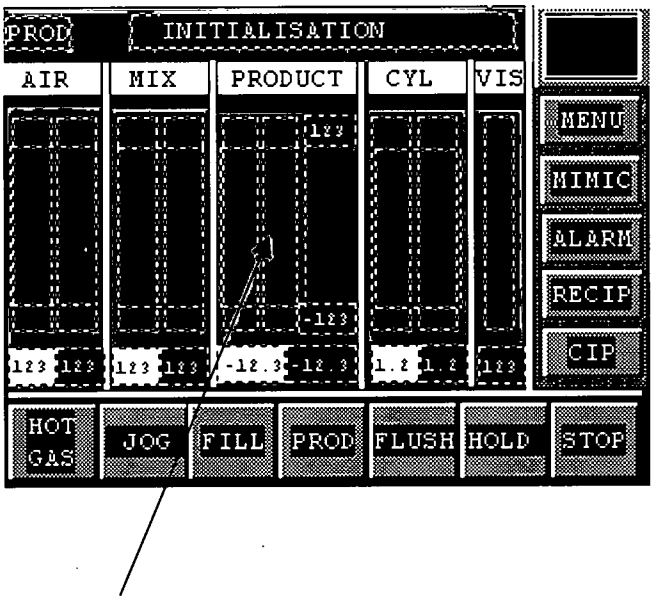

By pressing the middle of the bar graph area on the product temperature controller, indicated as a rectangle on the picture above, you will enter into the product temperature tuning screen where it is possible to adjust the various parameters related to the control loop.

Product Temperature Tuning

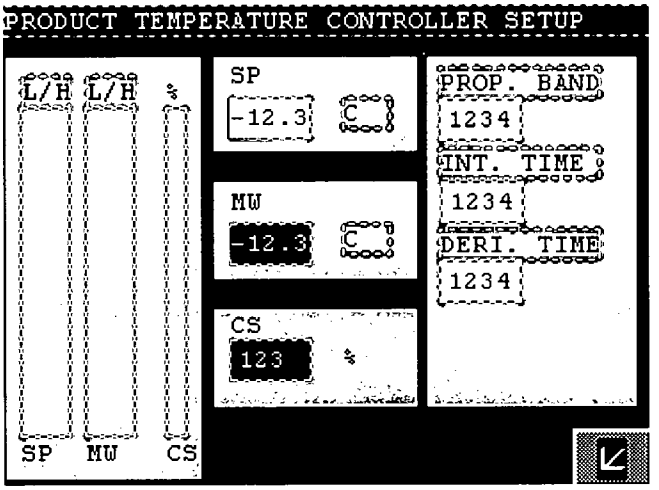

On the bar graph area on the left of the screen the set point, the current measured temperature and the control output to the backpressure control valve is represented. Please note that set point and measured value bar graphs are shown in engineering units while the control output bar graph is in percent of full scale.
In the middle area of the screen the same values are shown. It is possible to change the white set point value by touching the white area and key in the set point you want.

Prop. band

This parameter relates to the "P" portion of the control loop of the product temperature. This value is factory set to give a smooth and stable control of temperature of product by modulating the back pressure valve according to the difference between set point and measured value thus keeping a constant product temperature. If you are experiencing fluctuations in temperature it might be necessary to adjust this parameter. If you decrease the value the control loop becomes more responsive but if you lower it too much the control loop might oscillate. If the value is too big the control loop response might be too slow.

Int. time

This parameter relates to the "I" portion of the control loop of the product temperature. This value is factory set to give a smooth and stable control. The Integration time is used to smooth out the influence of the response of the Proportional Band. The bigger the value the bigger influence on the controller response.

Deri. time

This parameter relates to the D portion of the control loop of the cylinder pressure control. The derivative time is used by the controller to minimize the difference between set point and measured value. On some controllers this value is set to 0 and therefore not used. Great care must be taken when adjusting this value.

1. Press this button to return to the Production Screen

Limiting Operator adjustable set points

Sometimes it is desirable to be able to limit the operator adjustable set points. The set point High/Low Screen gives you the possibility. The 2 pictures below explain the route to this screen.

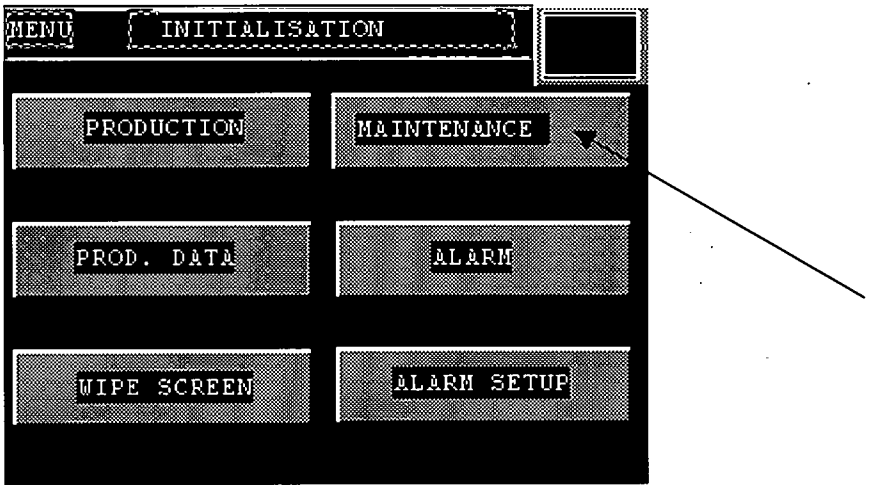

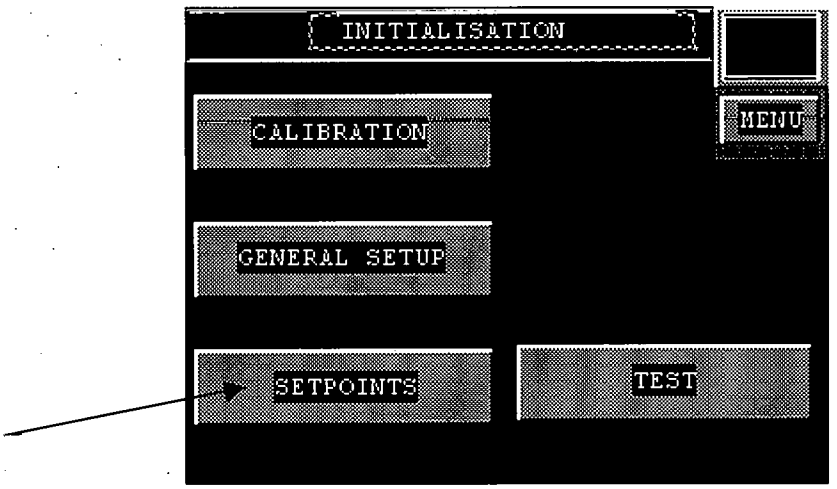

Set point High/Low

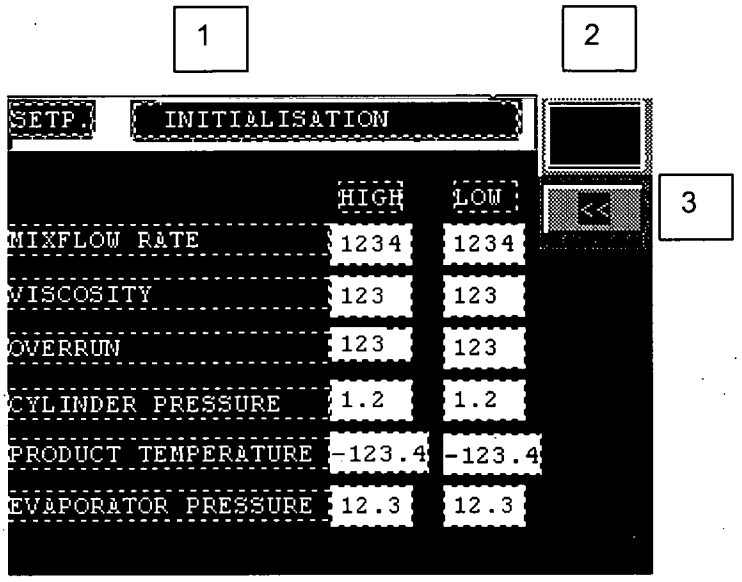

Mix flow rate high/low:

This pair of parameters makes it possible to limit the size of the mix flow rate set point.

Viscosity high/low:

This pair of parameters makes it possible to limit the viscosity set point and thereby reducing the risk of freezing up when producing on viscosity.

Overrun high/low:

This pair of parameters makes it possible to limit the overrun set point.

Cylinder pressure high/low:

This pair of parameters makes it possible to limit the cylinder pressure set point

Product temperature high/low:

This pair of parameters makes it possible to limit the product temperature set point and thereby reducing the risk of freezing up when producing on product temperature.

Evaporator pressure high/low (optional):

This pair of parameters makes it possible to limit the evaporator pressure set point

1. Status Indicator

This area is always reporting the actual status of the freezer in plain text.

2. Alarm Indicator

When an alarm occurs this indicator will be highlighted and an A appears on the indicator. By pressing the alarm button it is possible to see the actual reason for the alarm.

3. Operator Navigation Panel

Menu This button is used for returning to the maintenance main menu

General set-up

In the general set-up screen all the machine specific, but not product specific parameters are located. On this screen it is possible to adapt the freezer to your specific needs. The 2 pictures below explain how to get to the general set-up screen.

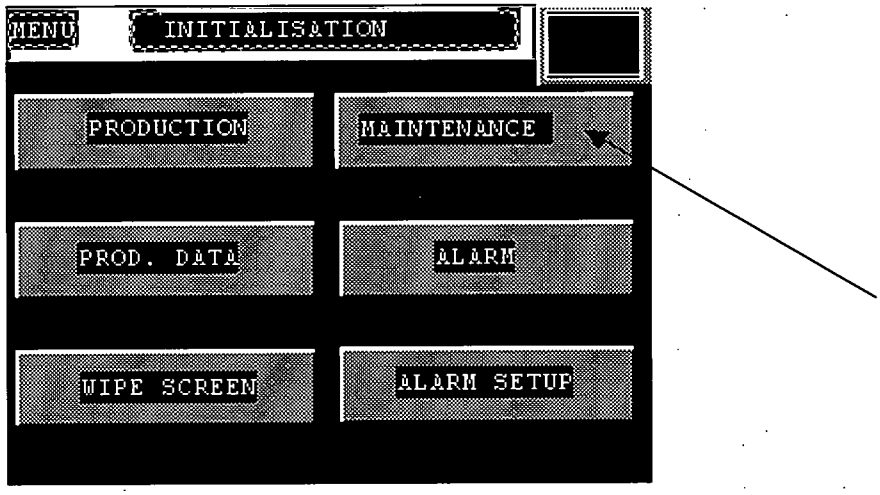

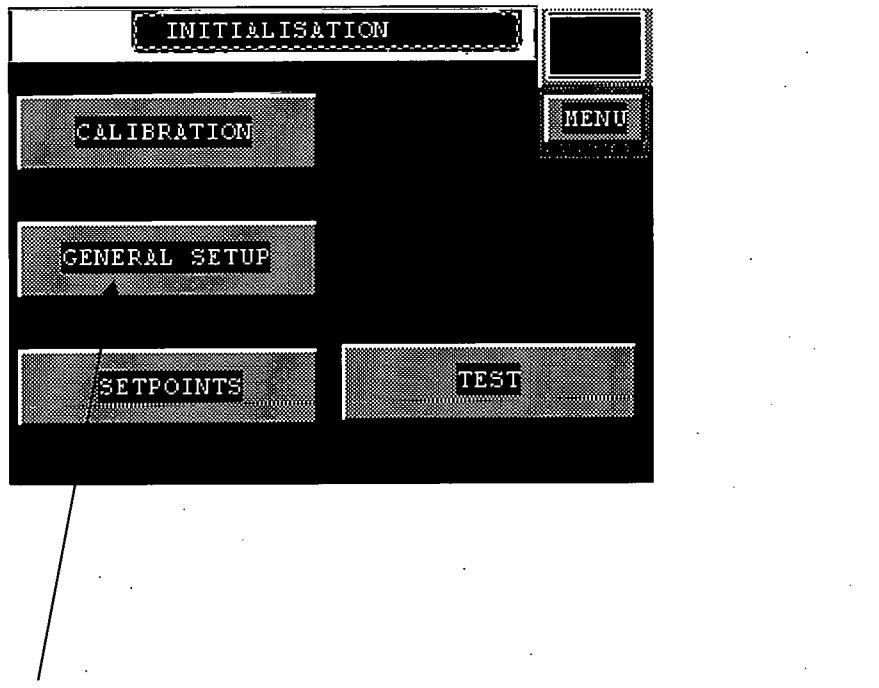

General Set-up

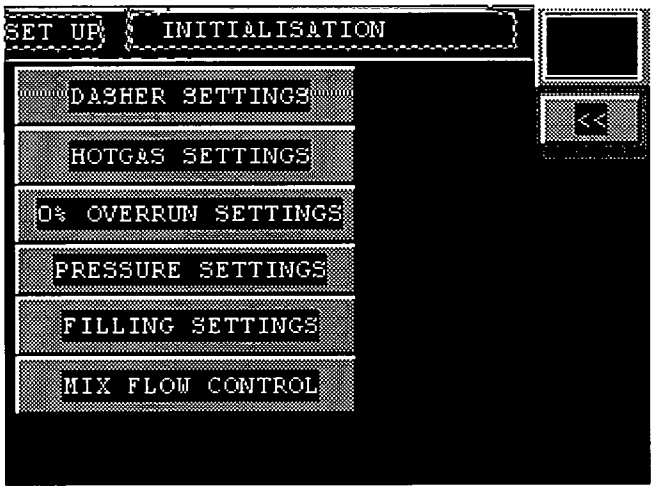

By pressing the various buttons on the general set up screen the adjustable parameters pops up on the screen.

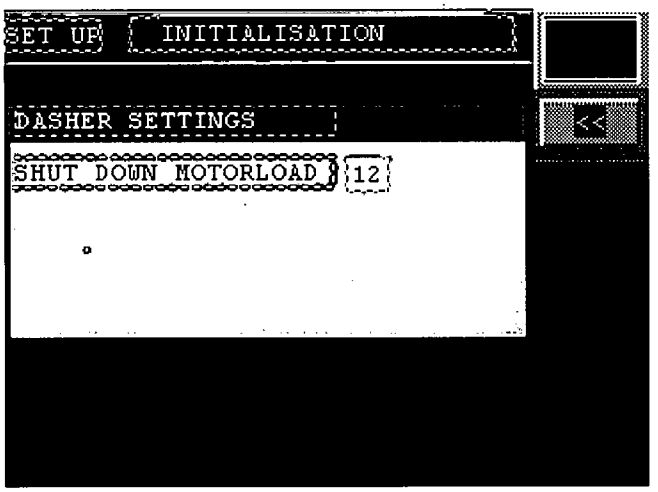

Dasher Settings:

Production Shuts Down when Motor load less than:
When stopping the production the "Shutdown" will be active as long as the dasher motor load is bigger than this parameter. When the motor load goes below the parameter the "Shutdown" will terminate.

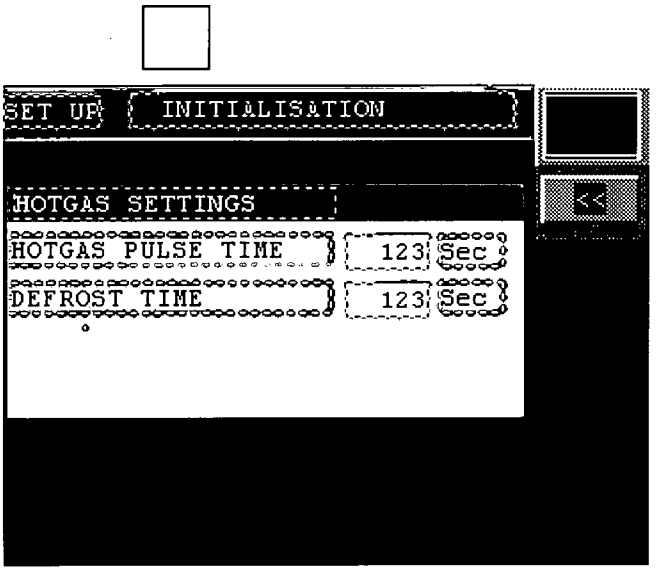

Hot Gas Settings:

Hot Gas Pulse Time:
This parameters sets the opening time of the hot gas valve during a hot gas sequence.

Defrost time:
This parameter controls the duration of the hot gas sequence.

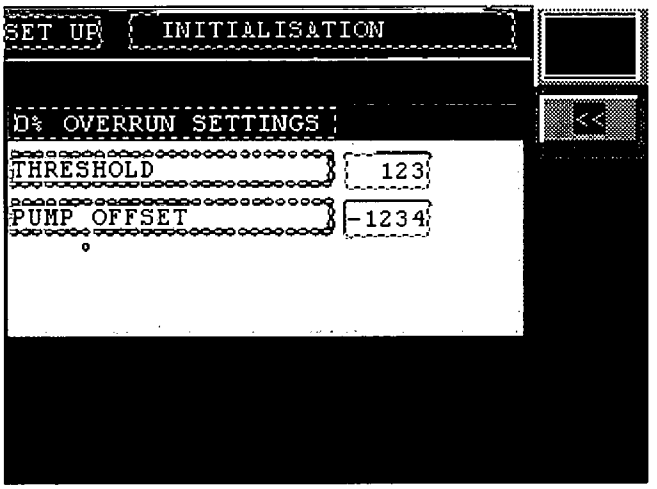

0 % Overrun Settings:

Threshold:
This is the set point at which the freezer will operate in the fixed ratio mode. The mix and product pump set point will be the same. This is useful if the overrun is very low and cylinder pressure cannot be measured

Pump Offset:
When the product is frozen in the cylinder, the expansion of the product will raise the cylinder pressure.
This parameter allows compensation for this increase in the cylinder pressure.
When the parameter is 0 the mix pump and product pump set points are equal.
To decrease the pressure in the cylinder this parameter must be positive.
To increase the pressure in the cylinder this parameter must be negative.

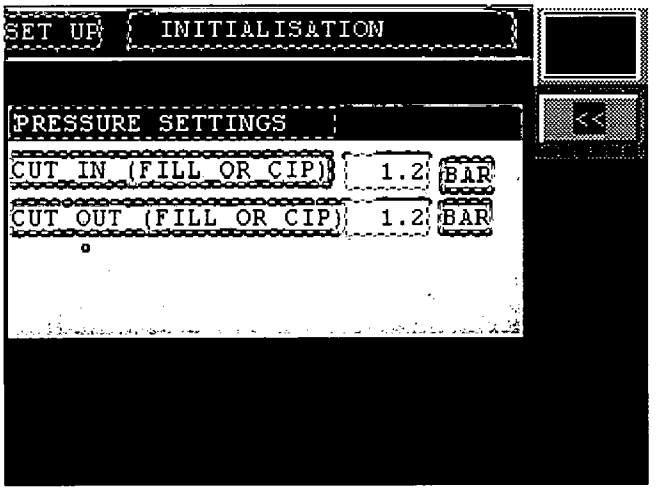

Pressure Settings:

Cut In When Filling Or In CIP/Sanitize:
When in filling mode this parameter is the point at which the freezers control system, based on cylinder pressure measurement, terminates the filling sequence and prepares the freezer for production.
When in CIP/Sanitize mode the parameter is the threshold at which the 2 programs enable and start timing at the same time the message "Low Pressure" disappears from the CIP Status Message Area on the Cleaning Screen.

Cut Out During CIP/Sanitize:
When in CIP/Sanitize mode this parameter is the threshold at which the 2 programs are halted.
At the same time the message "Low Pressure" appears on the CIP status message area.

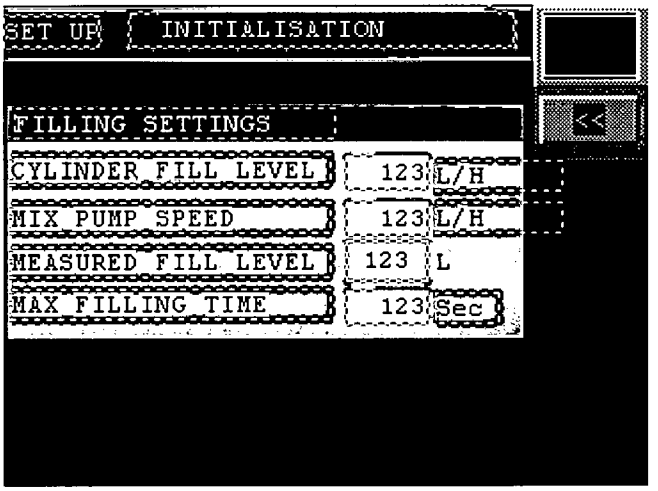

Mix Flow Filling Setting:

Cylinder Filling Level:
If the flow filling feature is enabled (Only possible with a mix flow meter) this parameter is the point At which the freezers control system, based on the actual mix flow into the freezer, terminates the filling sequence and prepares the freezer for Production.

Measured:
This is the actual mix flow measured by the mix flow meter during the filling sequence. The value will remain as long as the freezer is in production, but will be reset if a new filling sequence is started.

Mix Pump speed:
This is the mixpump speed setpoint for the filling sequence. It can be set between the min and max capacity of the pump.

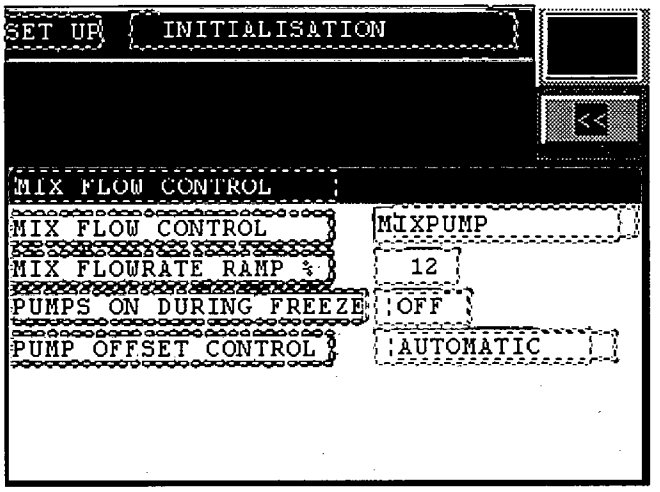

Mix Flow Rate Control:

Mix Flow Control:
This parameter toggles between mix flow control on feedback from the mix flow meter or from the calibrated mix flow rate. If the freezer is equipped with Waukesha pumps this parameter must always be set to "mix flow meter".

Mix Flowrate Ramp:
This parameter refers to the pump speed up time in % per minute when the freezer is going into production mode.

Pumps on during freezing:
By toggling this switch you can choose between running the pumps during the freezing sequence or not.

Pump Offset Control:
This parameter can be toggled between automatic and manual mode. Manual mode is normally used when producing with 0 percent overrun.

Calibration

On the Calibration screen it is possible to set the range of the various transmitters on the freezer. Normally they are factory set, but if you for instance want to fine tune the measuring you can do this by manipulating the calibration values. The routing below explains how you get to the calibration screen.

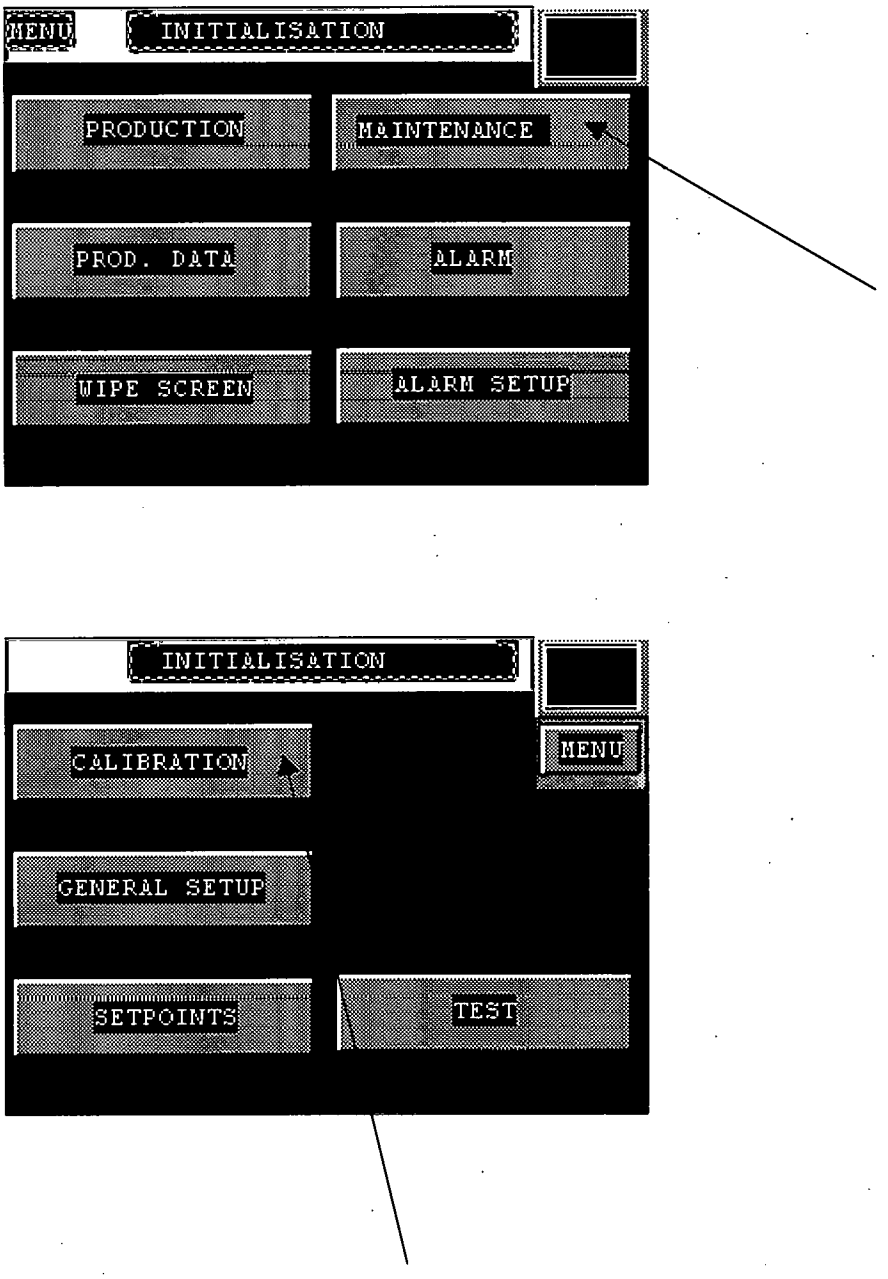

Calibration

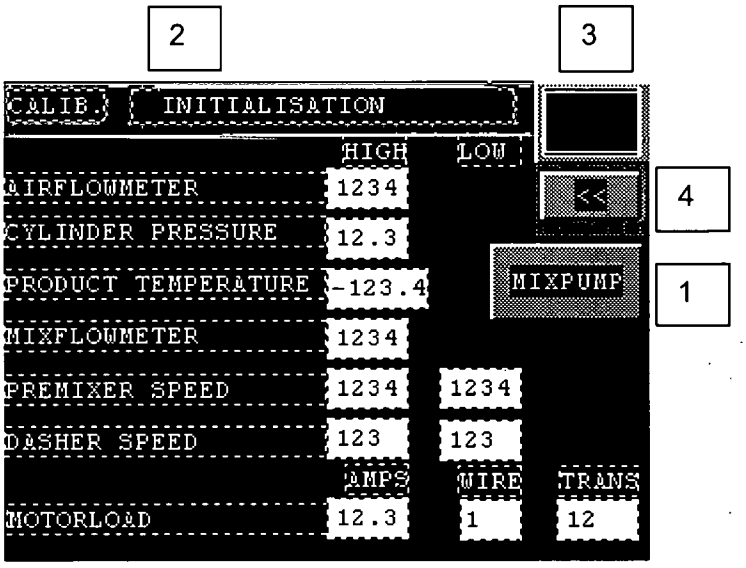

Air Flow Meter Range:

In this parameter the maximum range of the freezers airflow meter is stated. The value is in litres per Hour.

Cylinder Pressure:

This is the full-scale value of the cylinder pressure transducer.

Product Temperature:

By changing this value it is possible to adjust the measured product temperature.

Mix Flow meter:

This is the full-scale range of the mix flow meter.

Pre-mixer Speed (Optional):

The minimum and maximum speed of the pre-mixer can be set here.

Dasher Speed (Optional):

The minimum and maximum speed of the dasher can be set here.

Motor load

Amp:
This is the nominal amperage of the dasher motor, or on cream freezers the maximum amperage of the dasher inverter. The value can be seen on the motor nameplate. The parameter is used by the control system to calculate the dasher load.

Wire:
This parameter is used to tell the control system how many times one of the dasher motor wires is pulled through the current transducer. The value is used by the control system to calculate the motor load. On cream freezers there is no amp transducer therefore this value is set to 1.

Amp Transducer:
This parameter is the range setting of the current transducer. The standard transducer has 3 ranges, which can be set on the transducer itself. By means of this feature the transducer can be easily adapted to different dasher motor sizes. The value is used by the control system to calculate the motor load. On Cream freezers there is no amp transducer. Therefore is this value set to the same as the Amp value.

1. This button calls up the mix pump calibration screen

2. Status Indicator

This area is always reporting the actual status of the freezer in plain text.

3. Alarm Indicator

When an alarm occurs this indicator will be highlighted and an A appears on the indicator. By pressing the alarm button it is possible to see the actual reason for the alarm.

4. Operator Navigation Panel

<< This button is used for returning to the maintenance main menu

Mix Pump Calibration

You get to the mix pump calibration screen by pressing the calibration button as shown below.
If the freezer is measuring mix flow by a mix flow meter the calibration is not necessary. If the freezer is without mix flow meter the calibration has to be done. As the pump rotors wear out a new calibration may be necessary.

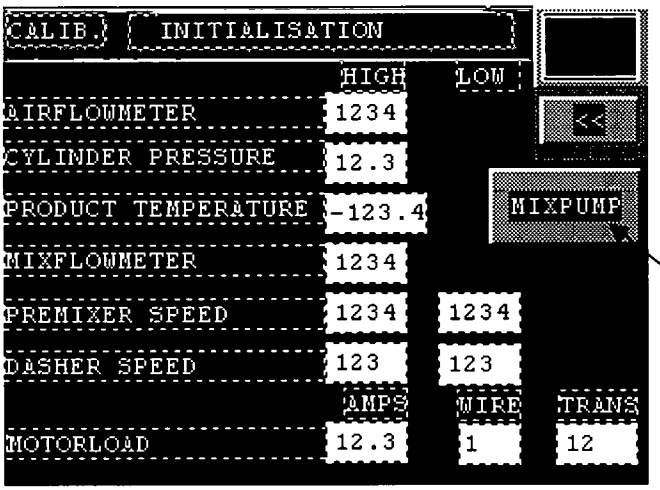

The following section explains how to calibrate the mix pump.

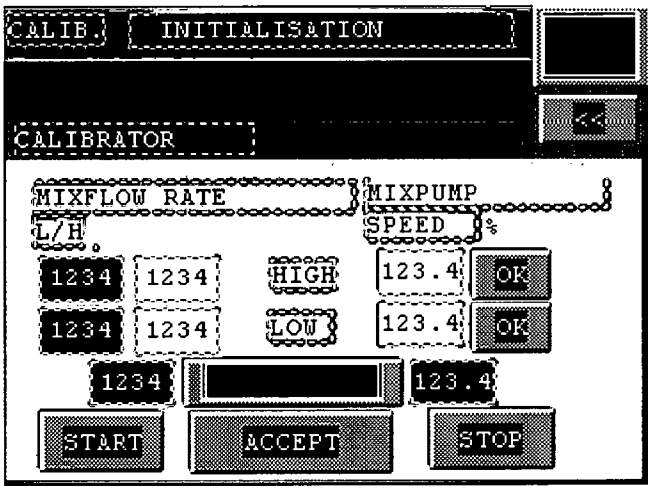

Calibration Procedure.

1. Write down the original set-up no. 1 and 2 in case of an error in the calibration

2. Weigh a litre (or gallon) of mix. Record this value.

3 Adjust the mix flow set point so the current mix pump speed is at 10 %. Adjust the rate set point to obtain the 10% (The value is display no 3)

4. Measure the actual mix flow with the pump operating at 10 %.

   a. Measure the mix flow (by weight) in one minute.

   b. Divide the weight of the mix by the weight recorded in step 2 to determine number of litre (or gallons).

   c. Multiply the litre (or gallons) per minute by 60 to obtain litre (or gallons) per hour. Record this value and label it A.

5. Press the key for low pump speed (%) no. 4 and put in 10 % and enter the value labelled A in the white area for low mix flow rate no 5.

6. Adjust the mix flow set point so that the current mix pump speed is at 80 %. Adjust the mix flow rate set point to obtain the 80 % (display no 3).

7. Measure the actual mix flow with the pumps operating at 80 %
   a. Measure how much mix flow (by weight) in one minute.

   b. Divide the weight of the mix by the weight recorded in step 2 to determine number of litre (or gallons).

   c. Multiply the litre (or gallons) per minute by 60 to obtain litre (or gallons) per hour. Record this value and label it B.

8. Press the key for high pump speed (%) no. 6 and put in 80 % and enter the value labelled B in the white area for high mix flow rate (no. 7).

9. Shut down the freezer and go back in to the mix calibration screen and press the start button.

10. Press the accept key.

11. Now the control system has made a slope that is controlling the mix pump and the freezer is now ready for production.

1. Status Indicator

This area is always reporting the actual status of the freezer in plain text.

2. Alarm Indicator

When an alarm occurs this indicator will be highlighted and an A appears on the indicator. By pressing the alarm button it is possible to see the actual reason for the alarm.

3. Operator Navigation Panel

<< This button is used for returning to the maintenance main menu

Section 3 – Master Level

This manual section describes the possibilities available for the Master user only. Please note that access to the functions requires enabling of the master password.

Using the Test Screen

The test screen is very useful for supervising and testing the control system. It is possible to supervise the status of the control systems input and outputs even during production. It is also possible to activate both digital and analog outputs manually and in that way testing if they are working or not.
You enter into the test screen by pressing the test button on the main maintenance menu as shown below.

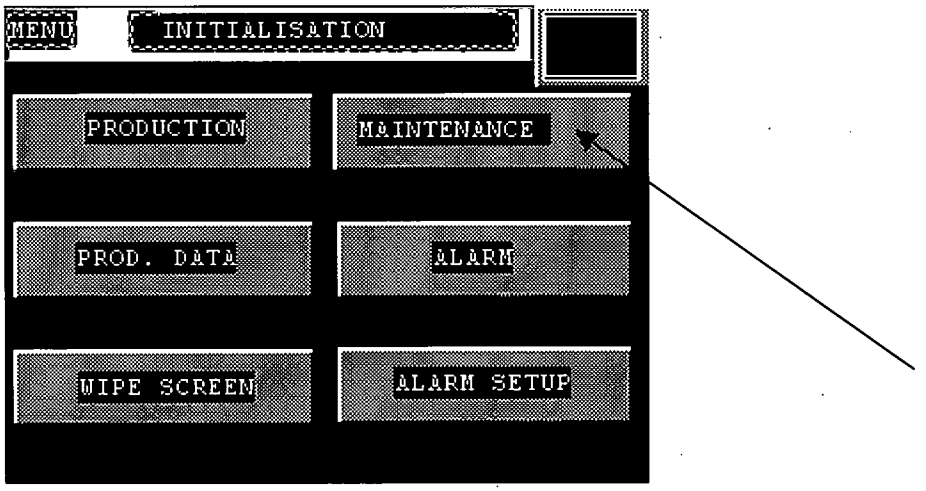

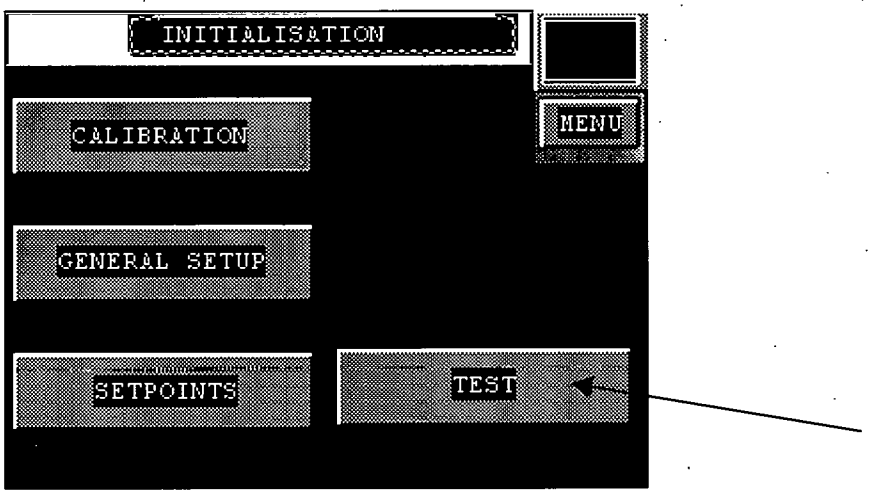

Test

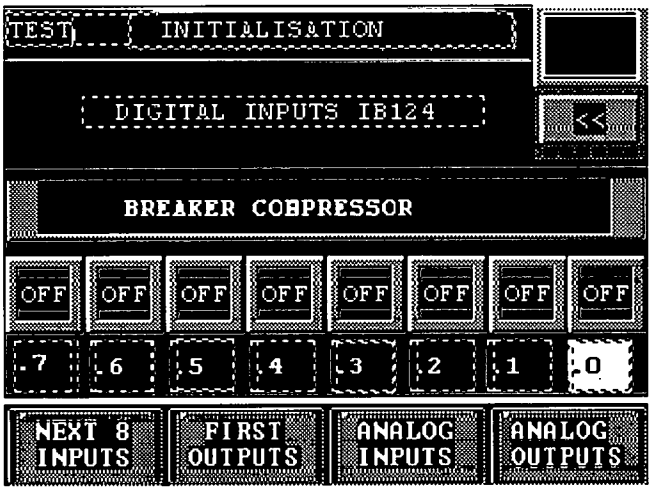

This is the first of the test screens. It is showing the status of the first 8 inputs of the freezers PLC. By pressing the numbers from 0 to 7 an explanation is clear text is displayed in the message field. It is not possible to force the status of an input.

By pressing <next 8 inputs the status screen for the next 8 inputs will be displayed:

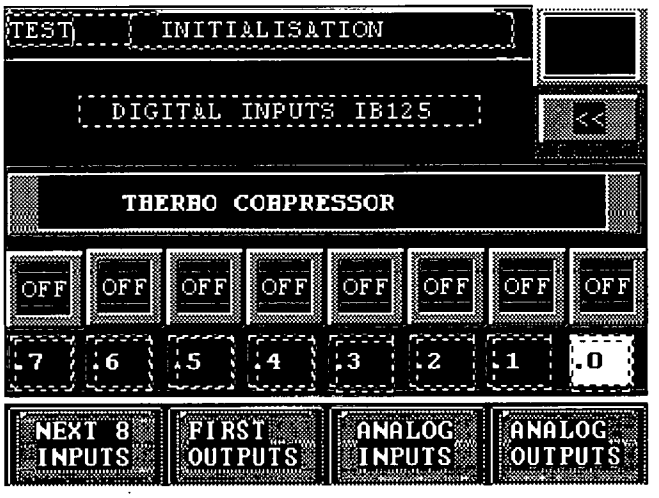

By pressing <next 8 inputs the status screen for the next 8 inputs will be displayed:

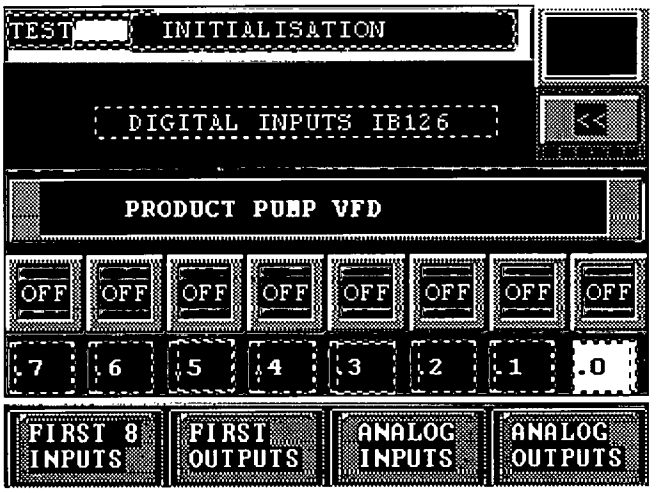

By pressing <first 8 inputs> the status screen for the first 8 inputs will be displayed.
By pressing first outputs the first 8 outputs of the freezers PLC will be displayed:

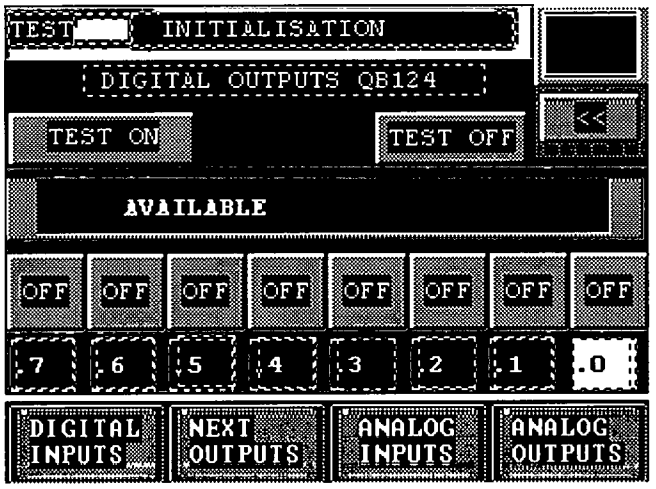

By pressing the <test on> button it is possible to force the status of the outputs. This is only possible when the freezer is in idle mode.
By pressing <test off> the test mode will be cancelled. You change the state of the outputs by pressing the on/off buttons.
When ending the test the outputs will resume the value they had before the test was activated.
By pressing <next outputs> the next 8 outputs of the freezers PLC will be displayed:

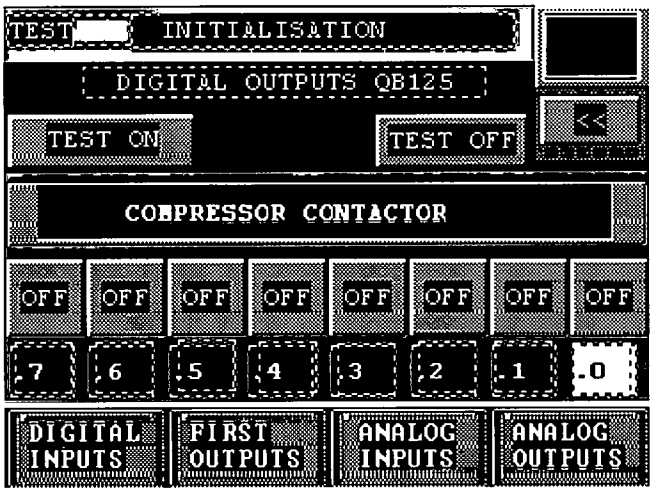

By pressing <first outputs> the first outputs of the freezers PLC will be displayed.
By pressing <analog inputs> the analog inputs of the freezers PLC will be displayed:

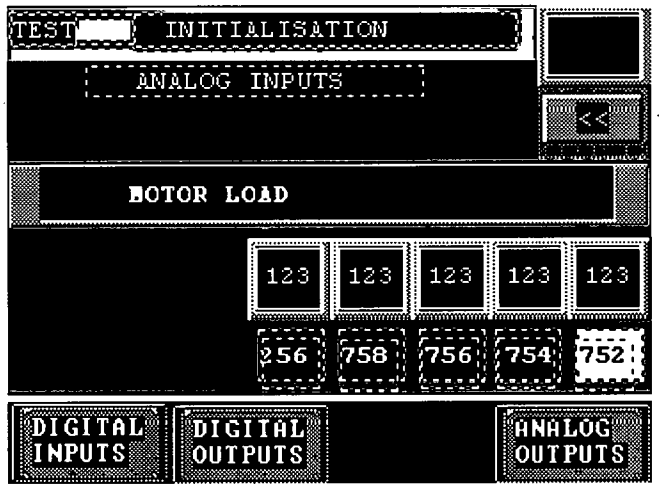

Note that is is only possible to monitor the status of the analog inputs. No forcing is possible. The value og the analog inputs are all scaled from 0 – 100 %.
By pressing <analog outputs> the analog inputs of the freezers PLC will be displayed:

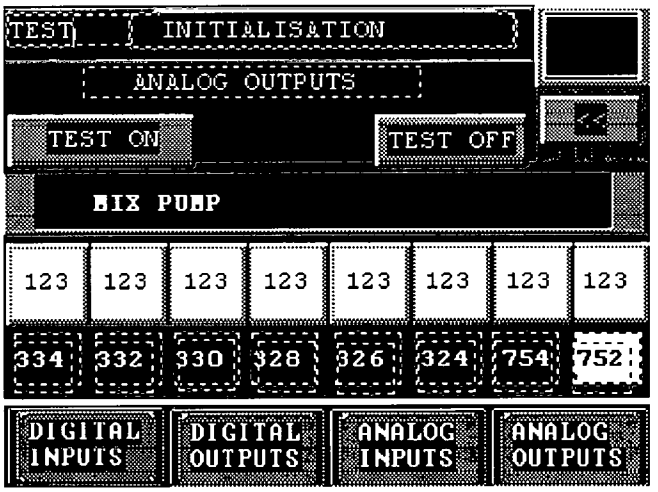

By pressing the <test on> button it is possible to force the status of the outputs. This is only possible when the freezer is in idle mode.
By pressing <test off> the test mode will be cancelled.
You change the value of the analog outputs by touching the white area and key in the new value. When ending the test the outputs will resume the value they had before the test was activated.

Table of contents

Maintenance **3**
Dasher (Open type) **3**
Removal 3
Installation 4
Inspection 4
Rear Beater Bearing **5**
Removal 5
Installation 5
Scraper Blades **6**
Inspection 6
Reconditioning 7
Belts **8**
Replacement 8
Inspection 8
Tensioning 9
Lubrication **10**
The pump gear case: 10
The gear drive for pumps: 10
Inner Cylinder **11**
Refrigerant pump-down 11
Removal 11
Assembly 12
Assembly – rear flange ring 12
Air System Maintenance **13**
Non-return valve 13
Rotary Pump **14**
Rotor **14**
Removal 14
Inspection 14
Installation 14
Shafts **15**
Inspection 15
Replacement 15
Shaft Seals **16**
Replacement 16
Lubrication **17**
Checking Oil Level 17
Changing the Oil 17
Shaft Bearings **18**
Replacement 18
Adjustment 19
Oil Seals **19**
Replacement 19

This page is intentionally left blank

Maintenance

The unit contains highly engineered systems and controls. To keep your unit operating trouble free and at peak efficiency establish a schedule of routine maintenance for the unit components.

Dasher (Open type)

Removal

The following procedure pertains to MF 400, 600, 800 Freezers.

- Turn off and Lock Out power supply.
- Disconnect the product piping at the outlet from the front cover.
- Remove the hex nuts from the front cover.
- Pull the front cover slowly off the studs.
- Remove the cover from the dasher.
- **Do not** let the dasher fall on the inner cylinder. Damage may occur to the dasher, blades or cylinder.

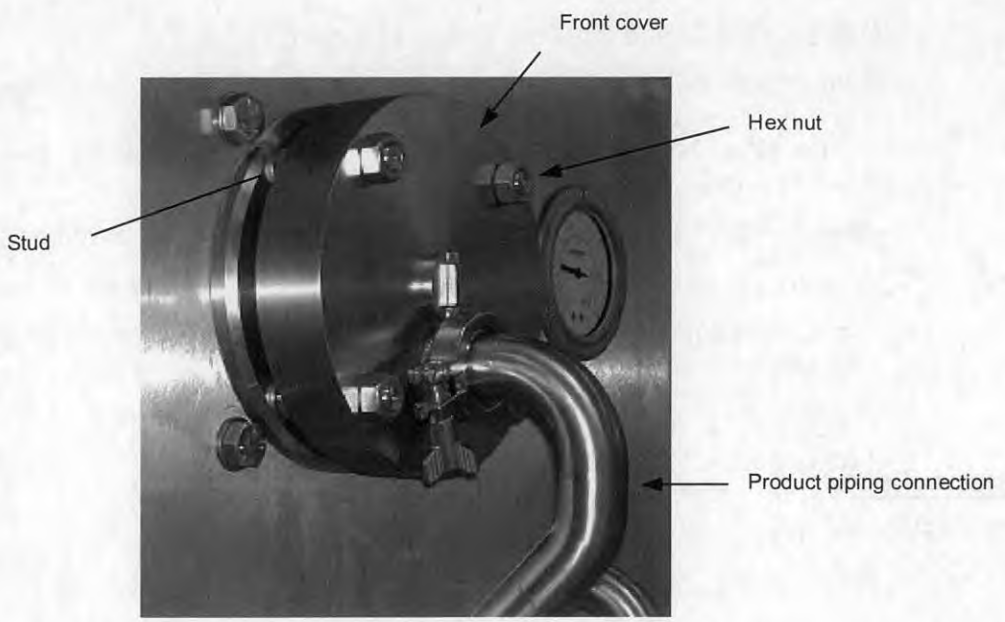

Removing product piping and dasher

WARNING
The dasher has sharp scraper blades that could cause severe cuts. Wear protective clothing for hands and arms whenever handling the dasher.

- Slowly pull the dasher out of the cylinder, while supporting the dasher from underneath. Be sure not to scratch the cylinder wall.
- Remove the scraper blades.
- When the dasher is out of the unit, certain items should be checked for wear.

  See Inspection.

Installation

1. Install the scraper blades onto the dasher.

WARNING
The dasher has sharp scraper blades that could cause severe cuts. Wear protective clothing for hands and arms whenever handling the dasher. Two workers are required to install the dasher.

2. Lubricate the dasher spline shaft.
3. Lift the dasher and carefully slide it into the cylinder.
4. Rotate the dasher as needed to engage the shaft splines and the main shaft.
5. Inspect the O-rings for the cover and dasher shaft. Replace if there is any deterioration.
6. Use sanitary lubricant on O-rings and install them in the cover.
7. Install the cover over the dasher shaft. Lift slightly and install over the four studs.
8. Install and tighten the four nuts onto the studs. Always tighten alternately and evenly.
9. Reconnect the product piping at the outlet of the front cover.

Inspection

Open Dashers have a beater inside the dasher.

The following parts require routine inspection for wear and/or damage.

- Dasher front bearing
- Rear Beater Bearing
- Scraper Blades
- Shaft Stub

Rear Beater Bearing

Removal

1. Carefully slide the beater out of the dasher.
2. Remove the rear beater bearing by loosening the hex head cap screw from the splined end of the dasher shaft.

Installation

1. Reassemble the rear beater components in the reverse order of disassembly.
2. Apply sanitary lubricant to all bearing locations.
3. Install a new gasket or O-ring in the rear beater bearing.
4. Firmly tighten the hex head cap screw, on the splined end of the dasher.
5. Install the beater and front bearing.

Scraper Blades

WARNING
Scraper blades are sharp and can cause severe cuts. Wear protective clothing and gloves to avoid contacting sharp edges.

Inspection

Scraper blades are made from stainless steel, which is hardened by heat treating for extended life. Even so, routine inspection and reconditioning is required to maintain a correct scraping edge to ensure good scraping of the inner cylinder wall and efficient unit operation.

To prevent unnecessary down time while scraper blades are being reconditioned, maintain a second set and routinely exchange them.

The figure shows a section through the freezing cylinder, with dasher and scraper blades. The dasher turns anti-clockwise, when seen from the front of the freezer.

- The leading edge of the blades must be in contact with the refrigerated cylinder wall

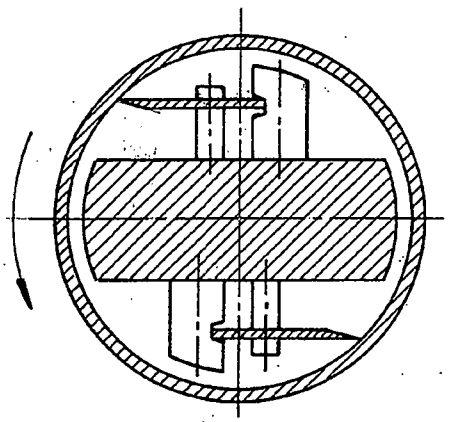

Also:

- Routinely inspect the scraper blades:

  The frequency of required reconditioning will depend on hours of operation, type of product, and cleaning procedures.
- Check scraper blades for nicks or gouges in the scraping edge. Recondition or replace any scraper blades with nicks or gouges.
- Check the width of the "heel" area of worn scraper blades. Recondition or replace when the "heel" dimension exceeds 1.5 mm.

Reconditioning

1 Shows a new and unused blade. It has a rather sharp cutting edge.

2 Shows the blade after some use. The blade is "worn-in" against the cylinder surface. A narrow contact area has developed over the entire length of the blade. After considerable use this contact face gets so wide, say 1.5 mm, that reconditioning becomes necessary, in order to maintain scraping efficiency.

3 Shows how to proceed. Put the blade in a vise and use a saw mill file to remove material from the edge as shown. The file should be held at approximately 90 to the contact face. Continue filing till the width of the face has been reduced to between 0.4 and 0.6 mm, to insure good contact between blade and cylinder wall.

4 Shows a reconditioned blade.

NOTE: Never remove the face completely

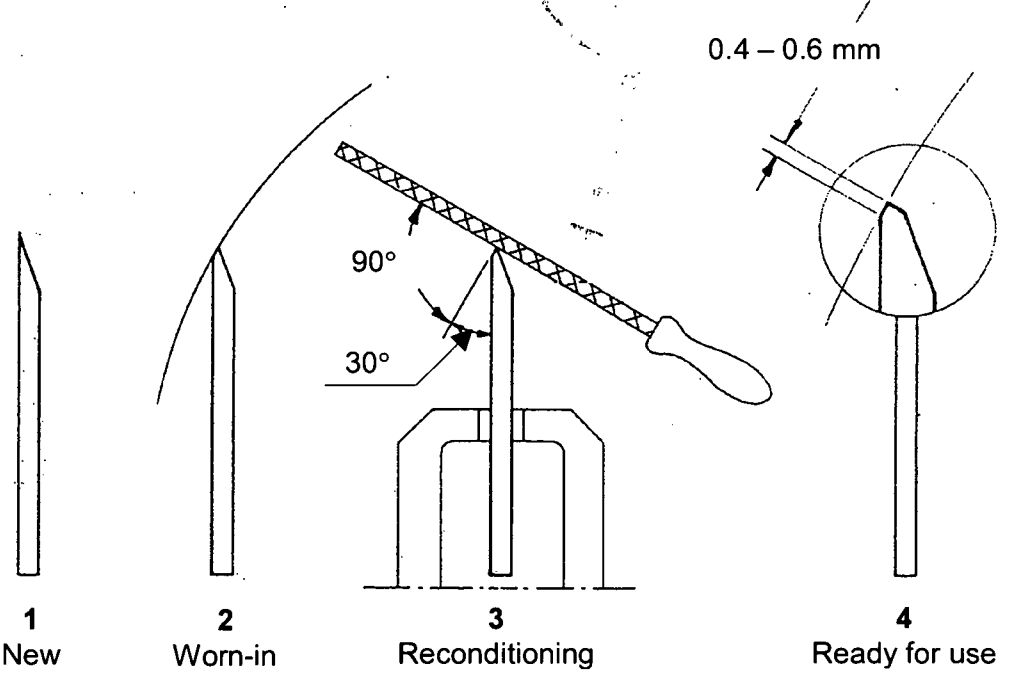

Belts

Replacement

1. Remove the panels at the rear and sides of the dasher drive area.
2. Lower the motor base plate by adjusting the nuts above and below the place on the four threaded support bolts. Remove worn belts.
3. Install new belts over the driven pulley. Do not combine new and used belts. All new belts must be "matched" to transmit power equally. Raise the motor base plate by adjusting the nuts above and below the plate on the four threaded support bolts.
4. Adjust the belt tension. See tensioning.

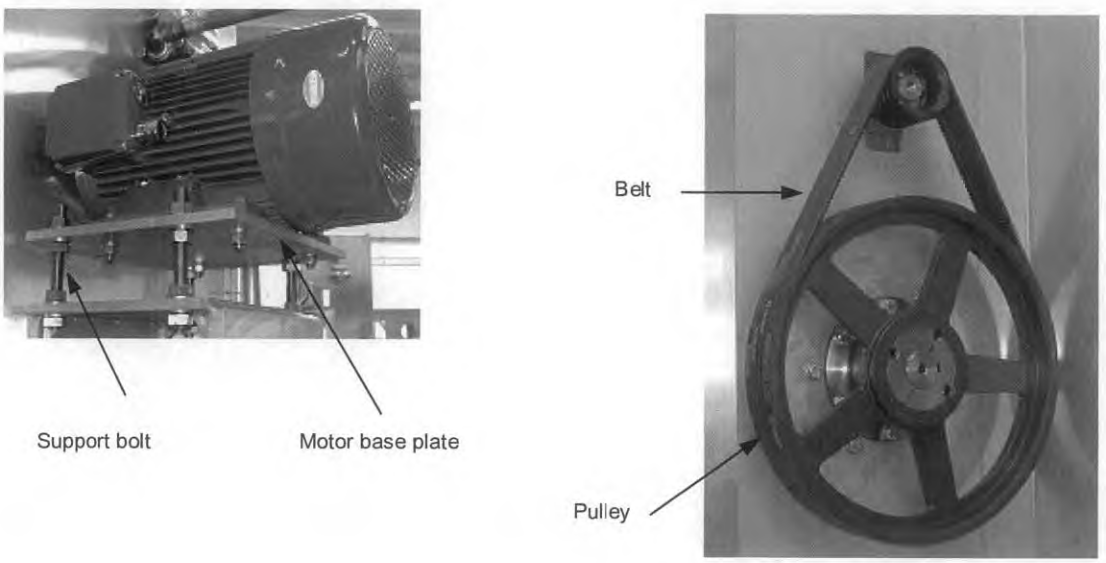

Belt components

Inspection

1. Remove the panels at the rear of the dasher drive area.
2. Routinely inspect the dasher drive belts for tension and wear. Replace if belts are cracked or worn.

Tensioning

Raise or lower the motor base plate to adjust belt tension by adjusting the nuts above and below the plate on the two threaded support bolts.
Check to be sure the pulleys are aligned, using a straight edge, after all bolts are tight.

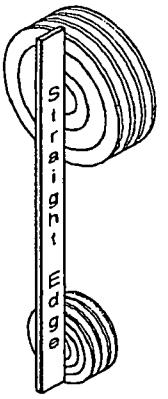

Proper pulley alignment

Adjust the belt to the proper tension using the diagram and table below.

S Spacing	D Deflection	F Force	
		New Belt	Used Belt
350 mm	5.25 mm	15.6 N	12 N

Table: Drive Belt Tension Variables

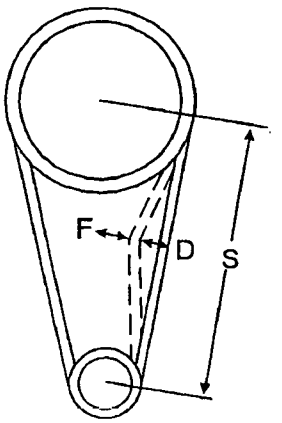

Drive belt tension variables

Lubrication

Items needing lubrication on a regular basis

The pump gear case:

Refer to section Maintenance of Pumps.

The gear drive for pumps:

The pump drive gear is lifetime lubricated.

Check for leaks of oil and seal rings at regular intervals

Inner Cylinder

If the cylinder is damaged, it must be replaced.

Refrigerant pump-down

When the cylinder needs to be replaced or cleaned or for other reasons taken out of the freezer, the low-pressure side of the refrigeration system must be pumped down so it is empty. A competent refrigerating service engineer should do this, never an inexperienced person.

Removal

1. Remove the rear flange ring by removing the four bolts. Remove all O-rings and discard.
2. Remove the front cover, dasher and rear cover.
3. Remove the four cover door studs.
4. Use two M-10 metric hex head cap screws as jack screws in the threaded holes to remove the cylinder and place it on a firm wood holding rack.

CAUTION
It is important that the items removed be returned to the same location. Failure to do this may cause cylinder misalignment. This would cause damage to the cylinder and the dasher.

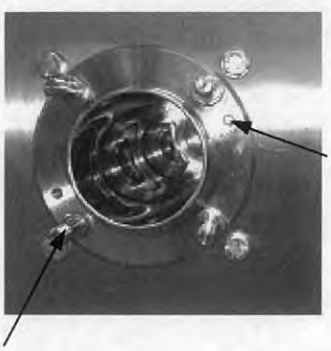

Front cover

Rear cover

Assembly

To reassemble the inner cylinder/front flange ring into the unit, do the following:

1. Clean the O-ring grooves on the front and rear spacer rings.

2. Place a small amount of grease or Vaseline at various locations in the O-ring grooves in the front spacer ring. This will retain the O-rings in their proper position in the grooves.

3. **Do not** grease the entire O-ring because during this process, the O-ring may stretch and may not fit the groove properly.

4. Install the front O-rings from the rear of the cylinder to prevent stretching.

5. Carefully install the cylinder/front flange ring and O-rings into the evaporator until the cylinder touches the rear flange of the evaporator. Lift on the rear of the cylinder to guide it through the rear flange of the evaporator.

6. Align the holes in the front spacer ring to the holes in the front evaporator flange. Install the four door studs in the front flange ring and into the evaporator flange. Turn them until they are hand tight. Then back them out 1/2 turn.

7. Place a long piece of wood into the front of the cylinder and lift on the wood to centre the front spacer ring over the front flange. Alternately tighten the bolts and studs.

Assembly – rear flange ring

To reassemble the rear flange ring onto the unit, do the following:

1. Install the O-rings in the grooves of the rear spacer ring. Using small amounts of grease as before.

2. Install the rear flange ring over the rear of the cylinder and pull it in.

3. Return the door studs and tighten them.

Air System Maintenance

The sanitary air assembly is located in the mix inlet at the rear cover of the unit. Its purpose is to filter the overrun air. To ensure that no contaminates get into the mix, the filter disc located in the check valve must be changed daily, or following CIP.

Non-return valve

The figure shows the non-return valve, which is placed on sanitary tee in the mix pipe from the mix pump.

The valve body carries an O-ring in a V-grove, the bottom of which is connected to the inlet part of the valve body. The valve body is sealed against the nipple by means of a sealing ring.

It is very important that the seal ring and O-ring are in perfect condition to avoid counter flow through the valve. For the same reason, the valve should be kept clean.

Replacement:

- Loosen the clamp ring.
- Disassemble the parts and inspect the seal ring and the O-ring.
- Replace the parts if necessary.

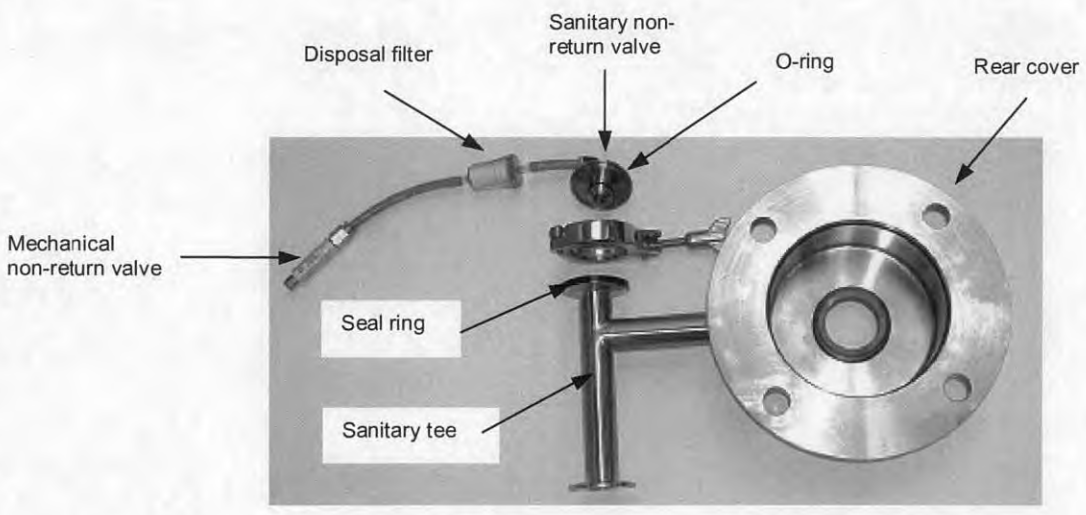

Non-return valve assembly

Rotary Pump

Rotor

Removal

1. Remove all product- and mix piping from the rotary pump.
2. Remove the front cover from the pump chamber.
3. Remove the pump chamber with rotors by hand.

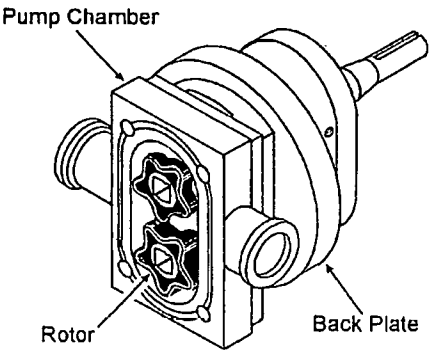

Inspection

Inspect the rotors for the following.

1. Nicks in the rubber.
2. Worn shaft hole.
3. Worn rotor faces.
4. Rubber deterioration.

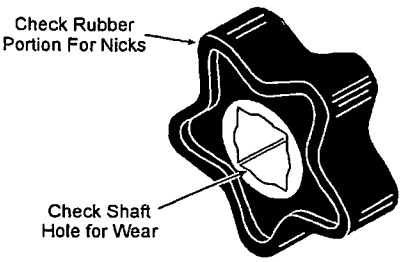

Note: If the rotors are worn, replace them with new ones. Always replace the rotors in pairs.

5. With the rotors removed, inspect the shafts for visible signs of wear. Refer to shafts, Inspection.

Installation

1. Install back plate and pump chamber.
2. Install shaft seals using the seal inserter.
3. Apply sanitary lubricant to rotors and shafts.
4. Assemble rotors onto shafts by hand. Make sure the dimple (match mark) on the rotor is lined up with the dot (match mark) on the rotor shaft.
5. Replace the old gasket with a new one as required.
6. Replace the front cover.

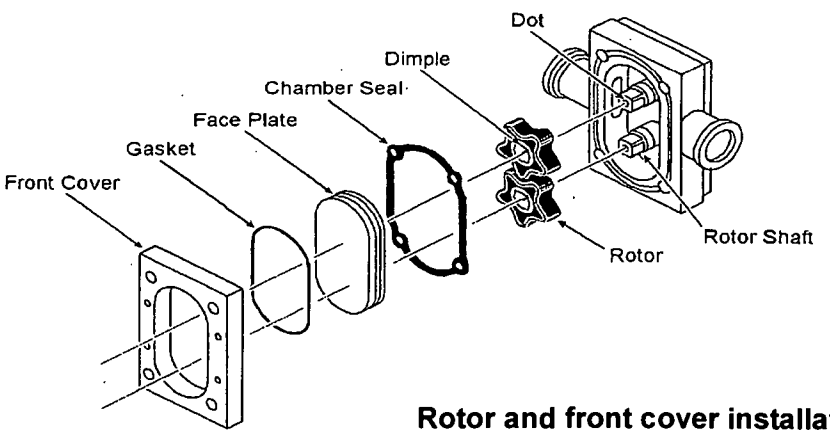

Rotor and front cover installation

Shafts

Inspection

1. With the rotors removed, inspect the rotor shafts for visible signs of wear. To check for wear, perform the following test:
2. With only one rotor on the rotor shaft (use an old rotor), check for lateral and vertical play.
3. If excess play is found, wear may be in the shaft or the rotor. Repeat the test with a new rotor.
4. If no play is evident, the old rotor was worn.
5. If play still exists, then the shaft is worn. Replace the shaft or in extreme cases, the entire gear case.

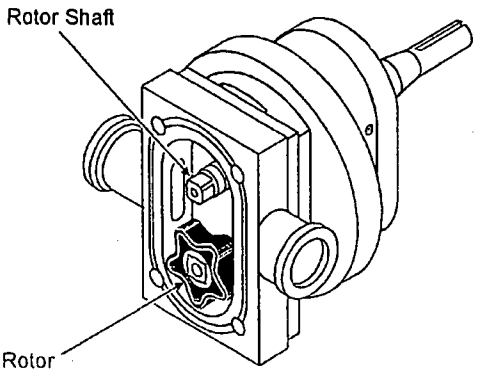

Rotor shaft inspection

Replacement

1. Remove the pump from the unit.
2. Drain the oil from the gear case.
3. Remove the cap screws on the rear of the gear case to remove the cover.
4. Carefully remove the gear case cover by sliding it to the end of the drive shaft. Use care not to damage seals.
5. Slide the shafts out of the rear of the gear case.
6. Install new bearings on the new shaft.
7. Reassemble the gear case and adjust the bearings.
8. Fill the gear case to the proper level with oil.

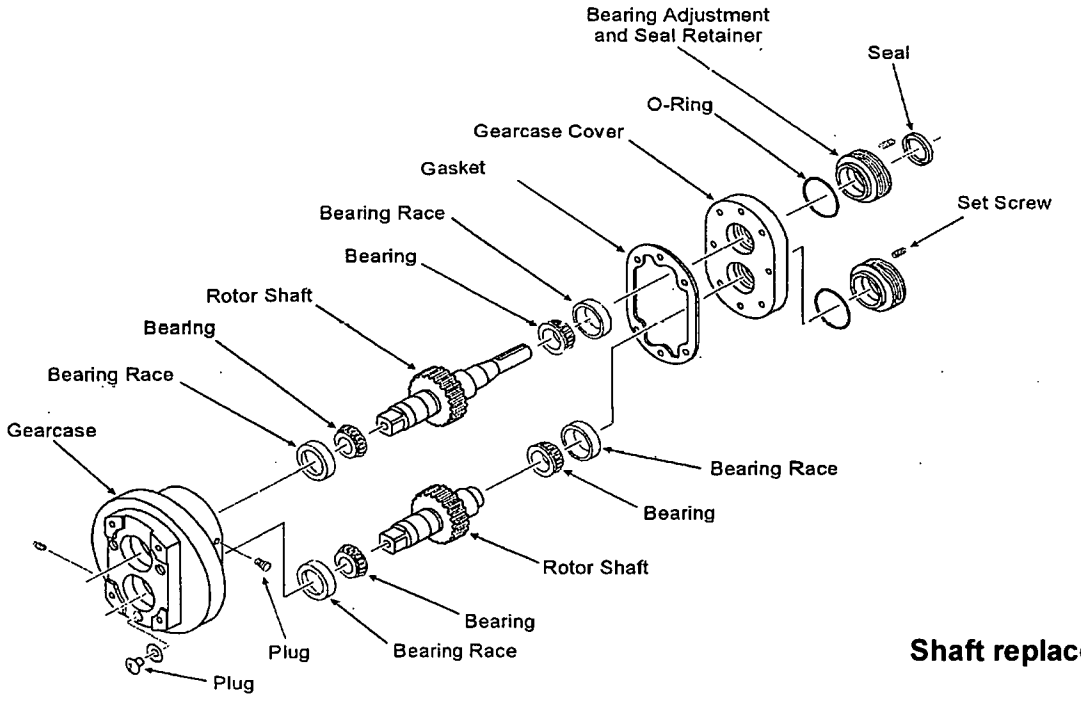

Shaft replacement

Shaft Seals

Replacement

The product seals prevent the product from leaking out of the pump body around the shaft. If product is leaking, then the seals, and/or seal bearings, must be replaced. This is accomplished by:

1. Removing the rotors from the pump.
2. Removing the back plate from the pump.
3. Removing the old shaft seal.
4. Reassembling the back plate onto the pump.
5. Installing the new shaft seal.
6. **NOTE**: The colour-coded dot on the shaft seal is important. Always replace with a seal that has the same colour-coded dot as the one removed.

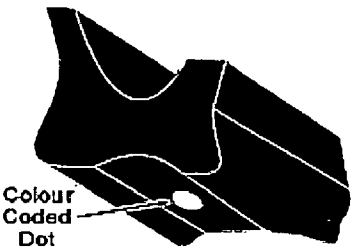

Colour-coded dot

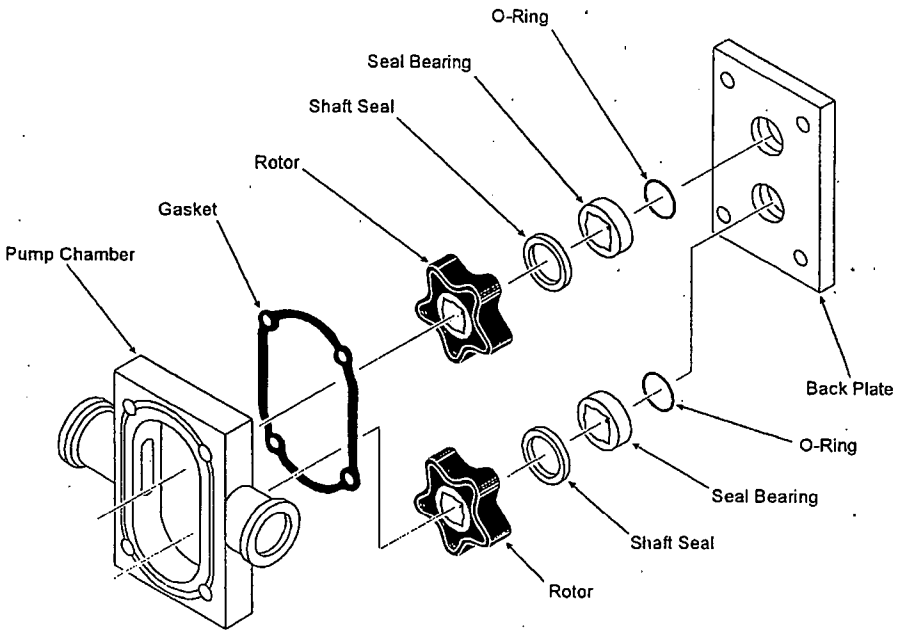

Replacing the shaft

- Carefully slide the inner cylinder forward until the seal is flush with the outer edge of the inserter.
  Place the inserter over the shaft and slide the seal into place by sliding the inner cylinder forward.

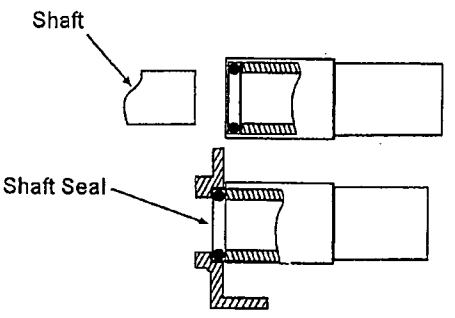

Inserting the new shaft seal onto shaft

Lubrication

Checking Oil Level

The oil level in the pump gear case should be checked monthly or every 500 hours and the oil should be changed after every 5000 working hours of use.

1. Remove the fill plug and the level plug.
2. Pour a small amount of fresh oil in the fill hole.
3. Keep adding oil until it begins to run out the level hole.
4. When the oil stops flowing out the level hole, replace the plugs.

Changing the Oil

1. Remove the drain plug to drain the old oil from the gear case.
2. Remove the fill plug and add a small amount of fresh oil to flush any contaminates from the gear case.
3. When the oil stops flowing out, replace the drain plug.
4. Remove the level plug and add oil until it begins to flow out the level hole.
5. Replace the fill plug and the level plug.

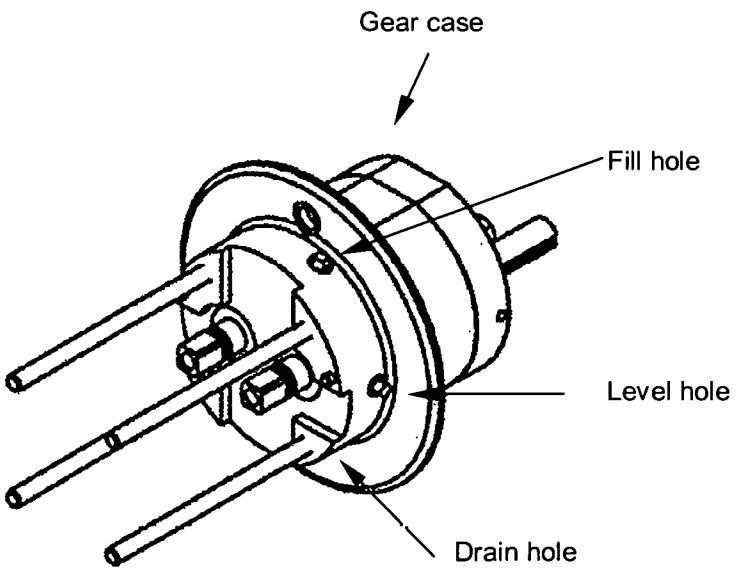

Gear plug location

Shaft Bearings

Replacement

1. To replace the bearings, do the following:
2. Disassemble the gear case to remove the shafts.
3. To remove the shaft bearings, use a bearing puller (not included) or cut the old bearing off.
4. To install the new shaft bearing, the bearing inner race must first be heated until very hot. Heat until the grease starts to smoke.
5. The hot bearing races should slide on the shaft easily. If not, use a soft hammer to tap them into place.
6. The outer bearing race is a light press fit into the gear case use a soft hammer to tap it into place.
7. Reassemble the shafts in the gear case and reassemble gear case.
8. Replace the oil seal if necessary.
9. Adjust the shaft bearings.

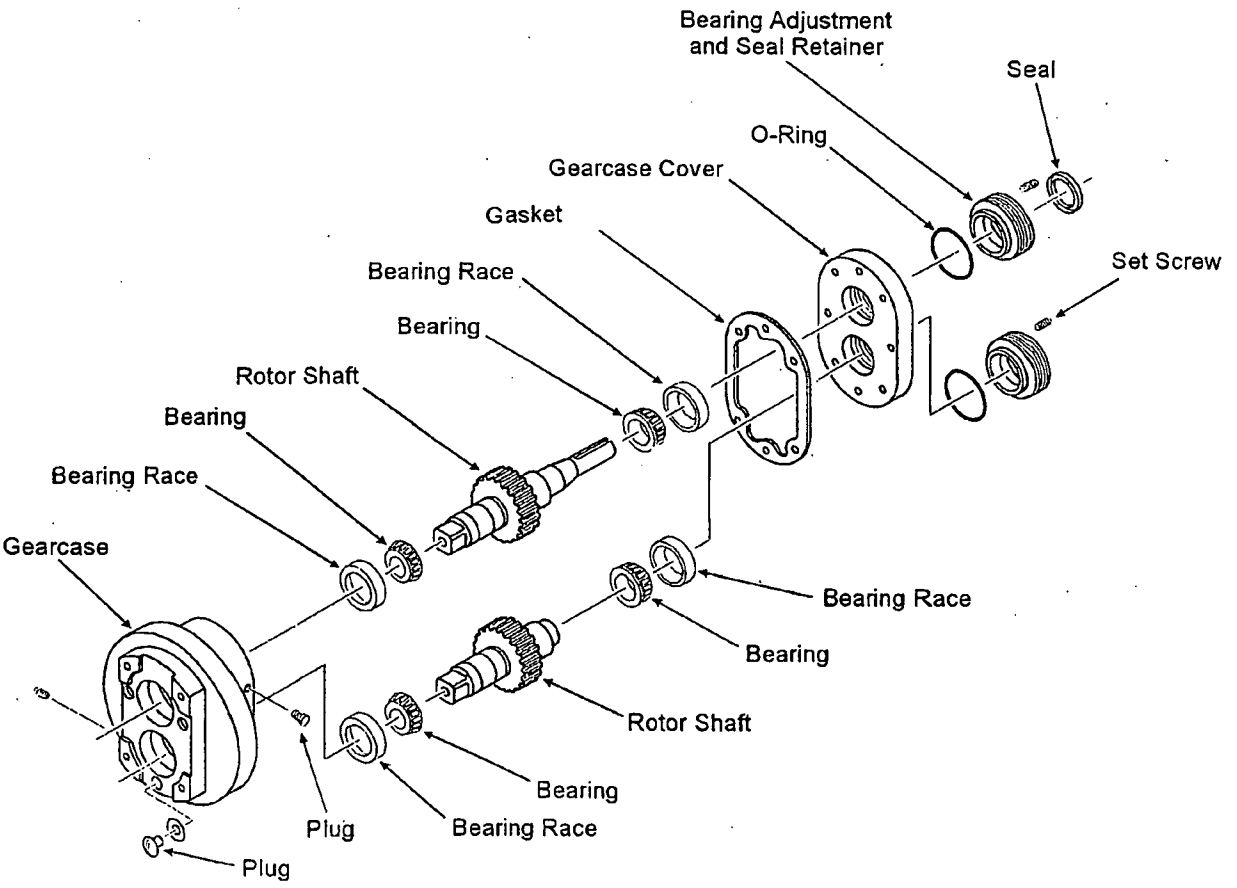

Shaft bearing replacement

Adjustment

The adjustment of the shaft bearings is critical in the smooth operation of the pumps. The adjustment made to the shaft bearings is to eliminate end play in the shaft. This is accomplished by doing the following:

1. Remove the setscrews from the seal retainer nut and the bearing adjustment nut.
2. Rotate the drive shaft and tap lightly to free up the bearings.
3. While rotating the drive shaft, use a screw driver to tighten the seal retainer nut until resistance is felt in the shaft.
4. Mark the seal retainer nut and gear case and back the nut off 180 degrees.
5. Tighten the bearing adjustment nut in the same fashion, but Do Not back off.
6. Tighten the seal retainer nut to the mark and replace the se screws.

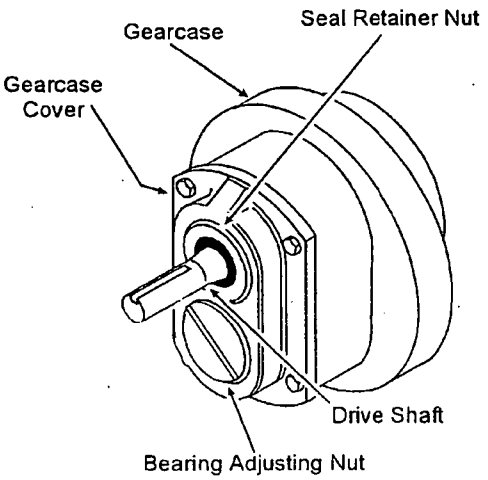

Adjusting shaft bearing

Oil Seals

Replacement

If oil leaks out of the gear case from around the shafts, then the oil seal must be replaced.

This is done by doing the following:

1. Inspect the shafts to locate the bad seal.
2. Remove the oil seal.
3. Install a new oil seal.

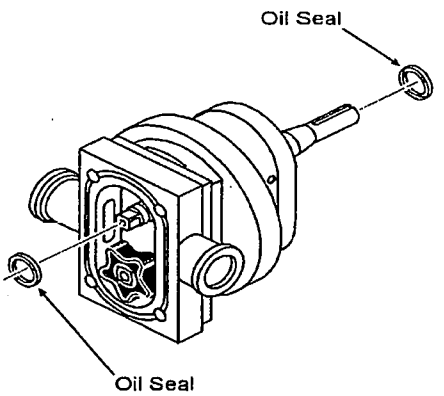

Replacing the oil seal

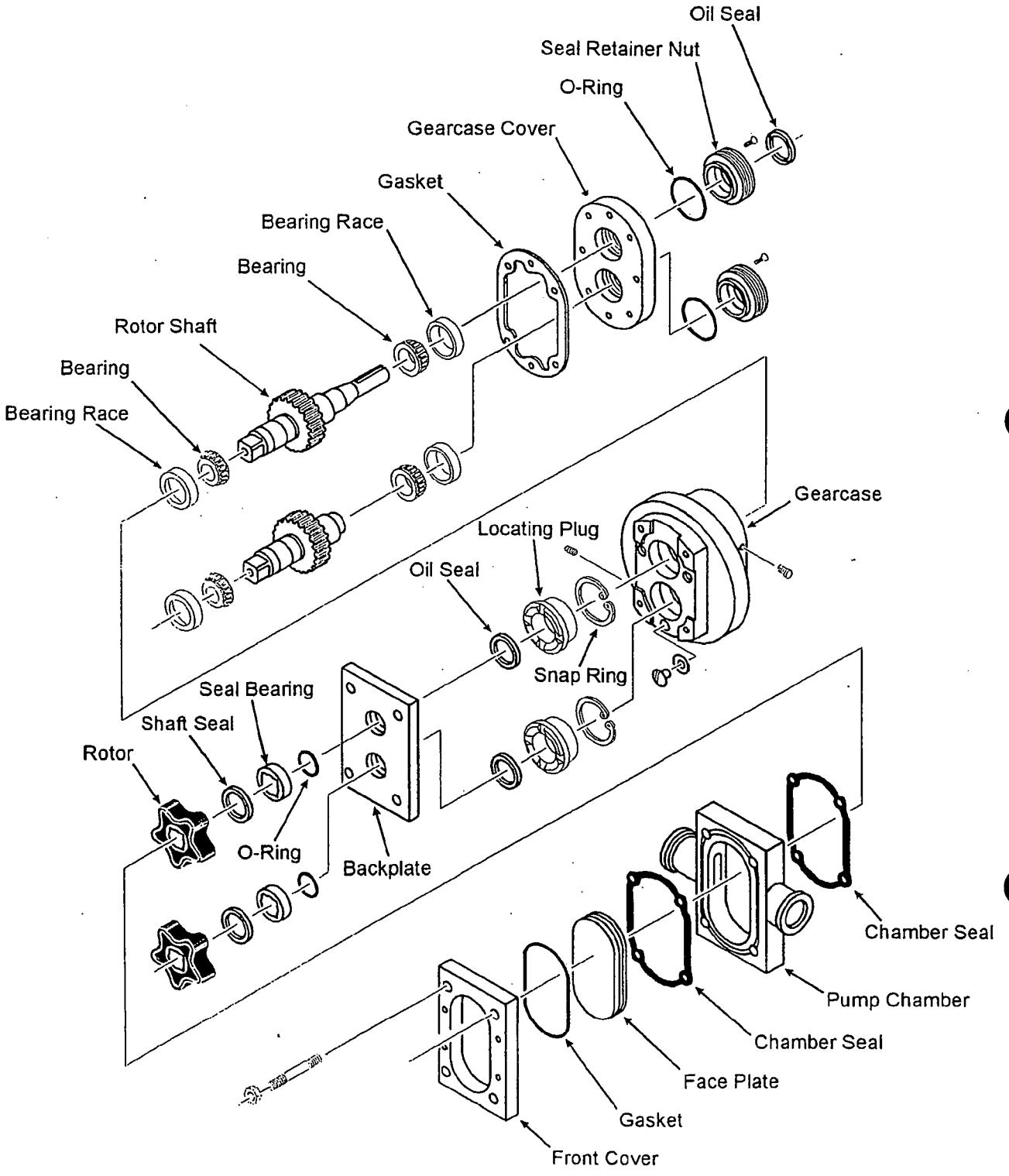

Rotary pump exploded view

Table of contents

Electrical maintenance of the programmable controller 3
CPU 3
Stop indicator 4
To restart the controller 4
Analog input module 5
To test the analog input module: 5
Refer to I/O list for proper channel 5
Analog output module 6
To test the analog output module: 6
Refer to I/O list for proper channel 6
Digital Input Module 7
Digital Output Module 8
I/O Assignment List 9
I/O Assignment List 10
External Interface Connections to Unit 11
External Interface Connection to Unit 12

Settings for pumps
Settings for Danfoss EKC 366

This page is intentionally left blank

Electrical maintenance of the programmable controller

The programmable controller is used to process information it receives from the workstation. It analyses the analog and digital inputs. Then based on the program, the controller changes the state or value of outputs.

The programmable controller has it's own micro memory card where the program is stored. The program is loaded into the programmer port with a MPI adapter and a computer or through the micro memory card.

CPU

The figure below shows the control and display elements of a CPU 31xC. Arrangement and number of elements differ in some CPUs.

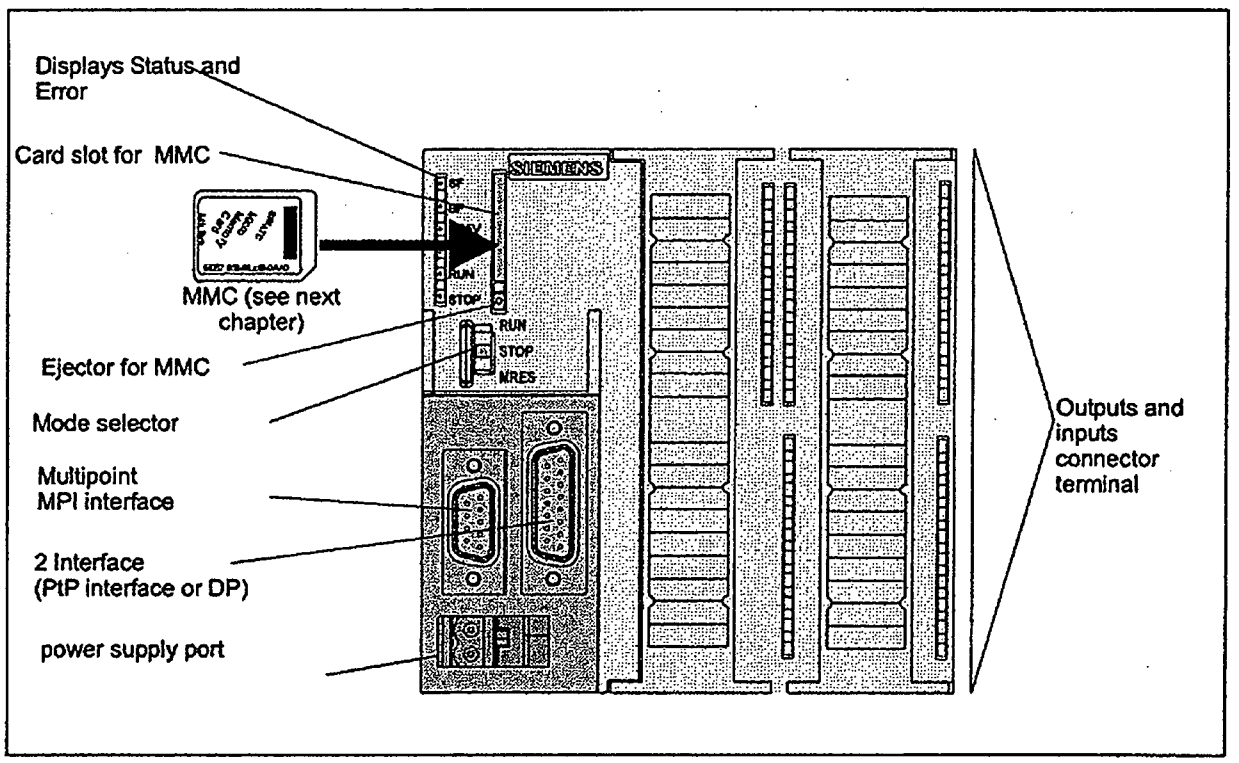

CPU

Stop indicator

When the Stop Indicator is illuminated, this indicates that the controller is in a state where a fault has probably occurred or the Run-Stop switch is in the Stop position.

To restart the controller

Turn the key switch to MRES Position and then turn the switch back to the RUN position.

If the Run Indicator illuminates, the controller has restarted. If the Run Indicator does not illuminate, a programmer is most likely needed to find the fault.

Analog input module

The analog input modules are used to convert the 4-20 mA input from the transmitters to the programmable controller.

To test the analog input module:

1. Place an ammeter in series with one of the input wires.

2. Display the Input/Output Test screen from the Debug menu on the operator workstation.

Refer to I/O list for proper channel.

1. View the ammeter and the Card Channel. If the ammeter reading equals 4 mA, then the Card Channel on the Input/Output screen should indicate 0. If the ammeter reading equals 20 mA, the Card Channel should indicate 100.

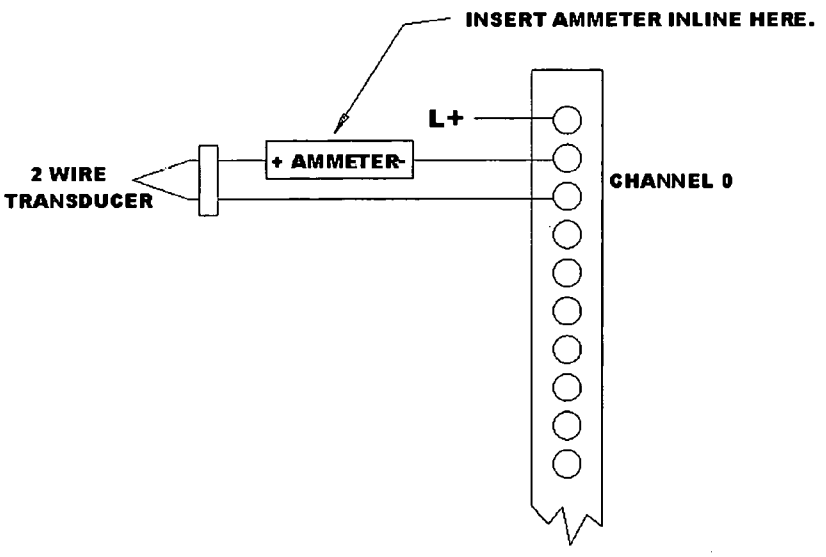

Connecting two wire transducers (Analog Input)

Analog output module

The analog output modules are used to convert data from the PLC to back pressure control valve, and pump inverter.

To test the analog output module:

1. Place an ammeter in series with one of the input wires.

2. Display the Input/Output Test screen from the Debug menu on the operator workstation.

Refer to I/O list for proper channel.

4. View the ammeter and the Card Channel. If the ammeter reading equals 4 mA, then the Card Channel on the Input/Output screen should indicate 0. If the ammeter reading equals 20 mA, the Card Channel should indicate 100.

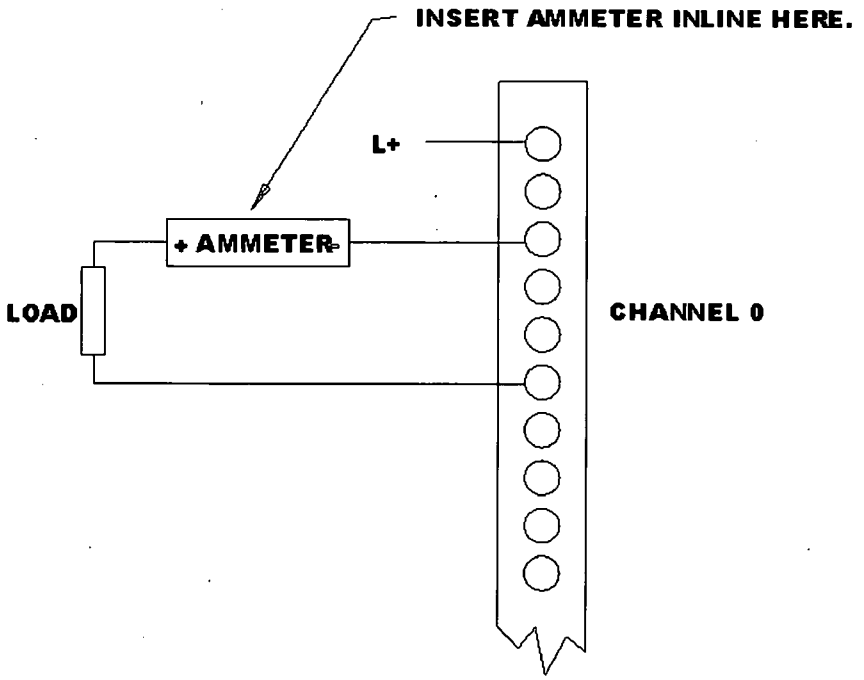

Connecting via a two wire circuit (Analog Output)

Digital Input Module

The purpose of the Digital Input module is to convert the status of the inputs (mix pump thermostat, CIP acknowledge etc.) to the PLC.

To test the Digital Input Module:

1. Place a negative lead from the voltmeter on terminal 10.
2. Place the positive lead from the voltmeter on the input (terminals 2-9).
3. When the voltmeter indicates 24 volts, the corresponding indicator on the module should be on.

Refer to input module front panel to determine which input number is what terminal number.

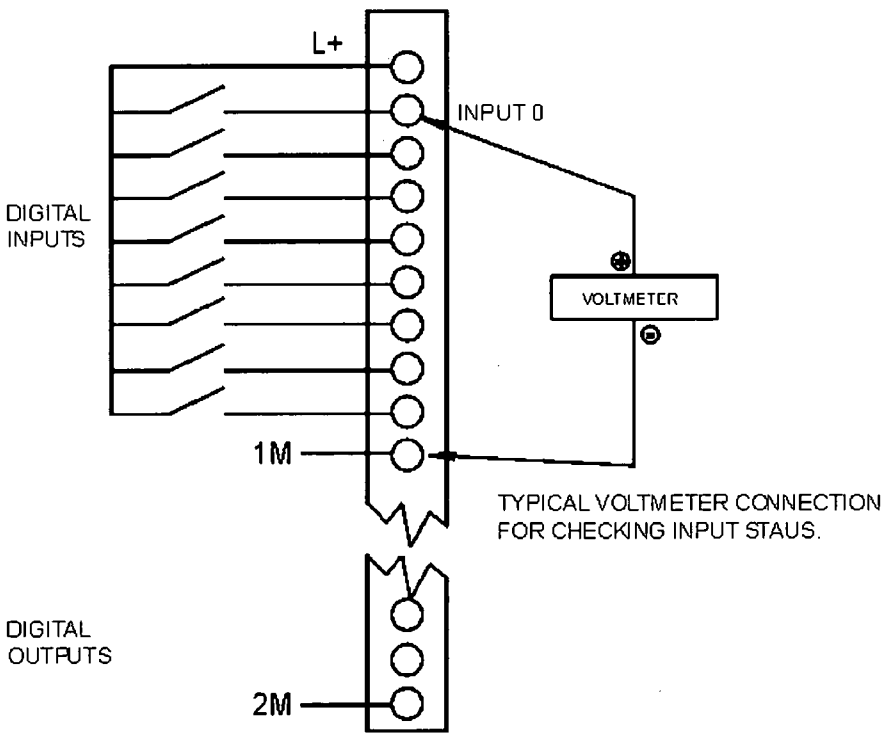

Digital input module

Digital Output Module

The purpose of the Digital Output module is to convert the required status of the outputs (drive air solenoids, refrigeration valves, AC inverter enables, motor starters, etc.) from the PLC.

To Test the Digital Output Module:

1. Place a negative lead from the voltmeter on terminal 20.
2. Place the positive lead from the voltmeter on the output (terminals 12-19).
3. When the voltmeter indicates 24 volts, the corresponding indicator on the module should be on.

Refer to output module front panel to determine which input number is what terminal number.

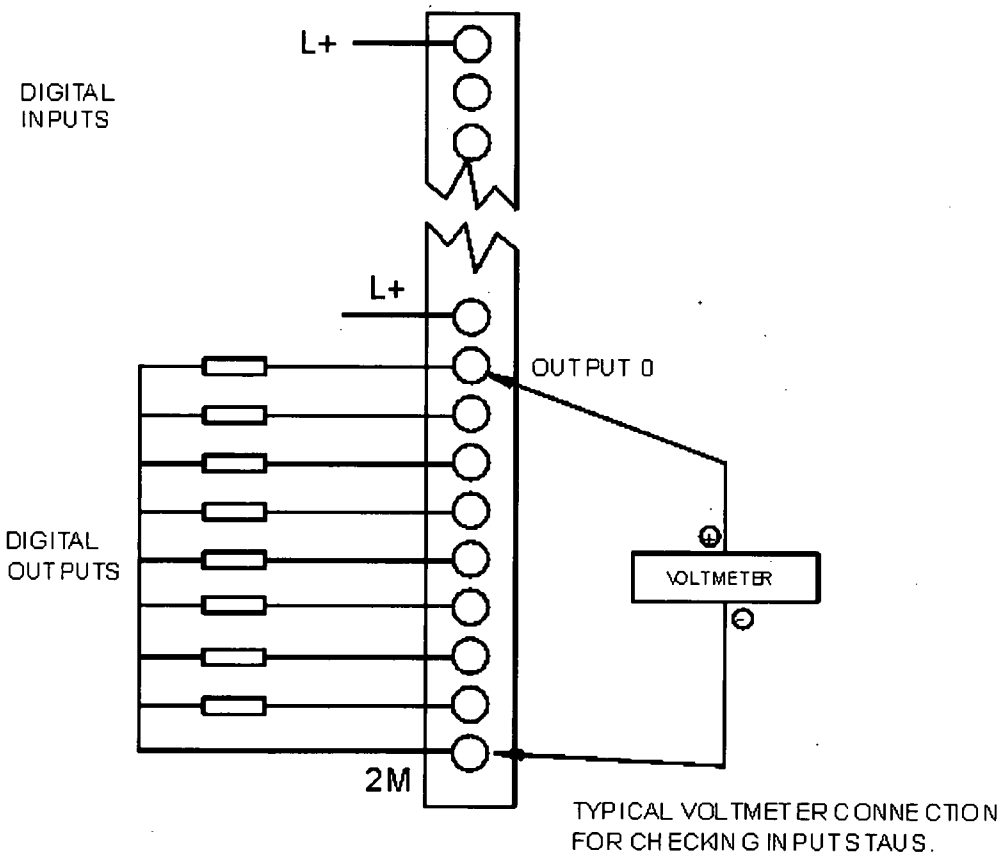

Digital output module

I/O Assignment List

Item number card/offset		Description
IN0	I124.0	Breaker Compressor OK
IN1	I124.1	Breaker Dasher OK
IN2	I124.2	Spare input
IN3	I124.3	Spare input
IN4	I124.4	Reserved
IN5	I124.5	Reserved
IN6	I124.6	Main power relay OK
IN7	I124.7	E-stop relay OK
IN8	I125.0	Thermo switch in Compressor
IN9	I125.1	High pressure switch
IN10	I125.2	Low pressure switch (Bitzer Compressors)
IN11	I125.3	Liquid level sensor (NH3 machines only)
IN12	I125.4	Mix pump drive OK
IN13	I125.5	Emergency pump down (NH3)
IN14	I125.6	Sanitize acknowledge
IN15	I125.7	CIP acknowledge
IN16	I126.0	Product Pump drive OK
IN17	I126.1	Re-circulation Pump drive OK (GA Cream)
IN18	I126.2	CR-Mixer drive OK (GA Cream)
IN19	I126.3	Spare input
IN20	I126.4	Spare input
IN21	I126.5	Spare input
IN22	I126.6	Spare input
IN23	I126.7	Spare input

I/O Assignment List

Item number card/offset		Description
OUT0	Q124.0	Digital Output Main air valve (GM machines only)
OUT1	Q124.1	Digital Output Pump covers
OUT2	Q124.2	Digital Output Liquid valve
OUT3	Q124.3	Digital Output Hot gas valve
OUT0	Q124.4	Reset E-stop
OUT1	Q124.5	Digital output Shut-off valve (NH3 machines only)
OUT2	Q124.6	Digital output Liquid dump valve (NH3 machines only)
OUT3	Q124.7	Digital output CIP request
OUT0	Q125.0	Digital Output Compressor start
OUT1	Q125.1	Digital Output Dasher motor start
OUT2	Q125.2	Digital output Mix Pump start
OUT3	Q125.3	Digital output Product Pump start
OUT0	Q125.4	Digital output Re-circulation Pump start (GA Cream)
OUT1	Q125.5	Digital output CR-Mixer start (GA Cream)
OUT2	Q125.6	Spare output
OUT3	Q125.7	Spare output
AIN0	PIW256	Analog Input Product temperature (GA –GS)
AIN1	PIW752	Analog Input Motor load
AIN2	PIW754	Analog input Mix flow-meter (Option)
AIN3	PIW756	Analog input Air flow feed back (GA-GS)
AIN4	PIW758	Analog Input Cylinder pressure (GA –GS)
AOUT1	PQW752	Analog Output Pump speed (GM) - Mix pump speed (GA-GS)
AOUT2	PQW754	Analog Output Refrigeration valve
AOUT3	PQW324	Analog Output Air flow set point (GA-GS)
AOUT4	PQW326	Analog Output Product Pump speed (GA-GS)
AOUT5	PQW328	Analog Output Dasher speed (GA Cream)
AOUT6	PQW330	Analog Output Re-circulation Pump speed (GA Cream)
AOUT7	PQW332	Analog Output CR-Mixer speed (GA Cream)
AOUT8	PQW334	Spare Output
AOUT9	PQW336	Spare Output
AOUT10	PQW338	Spare Output

External Interface Connections to Unit

(*)=Field Connected Items (#)= Optional Customer Connections (refers to I/O Test Screen)

Card/channel	Description	State	Condition
I124.0	Breaker Compressor	0	A fault occurred via a motor starter trip due to an overload.
I124.1	Breaker Dasher	0	A fault occurred via a motor starter trip due to an overload.
I124.7	E-stop relay OK	0	The unit will enter the Emergency Stop state
I125.0	Thermo switch in Compressor	0	Compressor overheated.
I125.1	High pressure switch	0	Cooling water supply insufficient.
I125.2	Low pressure switch	0	Compressor oil pressure too low.
I125.4	VFD Mix pump	0	Pump VFD has failed
I125.7	CIP acknowledge	1	The unit is ready to CIP and will go through a timing and jogging sequence.
I 126.0	VFD Product pump	0	Pump VFD has failed
I 126.1	VFD Re-cir. pump	0	Pump VFD has failed
I 126.2	VFD CR-mixer	0	VFD has failed
Q125.0	Compressor	1	Compressor will be enabled.
Q125.1	Dasher	1	The dasher will be enabled.
Q125.2	Pump	1	The pumps will be enabled.

External Interface Connection to Unit

Card/channel	Description	State	Condition
Q124.0	Main air valve	1	Air valve is open (GM)
Q124.1	Pump Covers	1	The covers are closed.
Q124.2	Liquid valve	1	Liquid supply open.
Q124.3	Hot gas	1	Hot gas open.
Q124.4	Reset E-stop relay	1	E-stop relay is being reset
PQW324	Air flow set point	4-20mA	4mAmp = 0% Air 20mAmp = 100% Air
PQW326	Product pump speed (GS – GA)	0-10V	0V = min speed 10V = max speed
PQW328	Dasher speed (GA Cream)	4-20mA	4mAmp = min speed 20mAmp = max speed
PQW330	Re-cir. pump speed (GA Cream)	0-10V	0V = min speed 10V = max speed
PQW330	CR-mixer speed (GA Cream)	0-10V	0V = min speed 10V = max speed
PQW752	Pump speed set-point	0-10V	Milliamp signal to pump VFD = 0 Volt (min. speed) 10 Volt = (max speed)
PQW754	Refrigeration Back Pressure Control Valve	4-20mA	4mA=0% (closed) 20mA = 100% (open)

SINAMICS_G110_Mixpump SINAMICS_G110	02-09-2005 09:37:52
SINAMICS G110 CPM110 V1.1x	
MF600GA_V30	Expert list

Parameter	Parameter text	Value SINAMICS_G110_Mixpump	Unit
r2	Drive state	Drive ready (1)	-
p3	User access level	Expert: For expert use only. (3)	-
p4	Parameter filter	All parameters (0)	-
p5	Display selection	21	-
p10	Commissioning parameter	Ready (0)	-
p14[0]	Store mode, USS	Volatile (RAM) (0)	-
r18	Firmware version	1066192077	-
r19	CO/BO: BOP control word	2H	-
r20	CO: Freq. setpoint before RFG	8.00	Hz
r21	CO: Act. frequency	0.00	Hz
r24	CO: Act. output frequency	0.00	Hz
r25	CO: Act. output voltage	0	V
r26	CO: Act. DC-link voltage	323	V
r27	CO: Act. output current	0.00	A
r34	CO: Motor temperature (i2t)	0.6	%
r52	CO/BO: Act. status word 1	B831H	-
r53	CO/BO: Act. status word 2	300H	-
r54	CO/BO: Act. control word 1	7EH	-
r55	CO/BO: Act. control word 2	2000H	-
r56	CO/BO: Status of motor control	3H	-
r67	CO: Act. output current limit	4.65	A
p100	Europe / North America	Europe [kW], motor base frequency is 50 Hz (0)	-
r127	Analogue / USS Variant	Analogue (0)	-
r200	Act. power stack code number	4018	-
p201	Power stack code number	4018	-
r206	Rated inverter power [kW] / [hp]	0.55	-
r207[0]	Rated inverter current, Rated inverter current	3.20	A
r209	Maximum inverter current	4.80	A
p290	Inverter overload reaction	Reduce output frequency (0)	-
p295	Inverter fan off delay time	0	s
p304	Rated motor voltage	230	V
p305	Rated motor current	3.10	A
p307	Rated motor power	0.55	-
p308	Rated motor cosPhi	0.000	-
p309	Rated motor efficiency	0.0	%
p310	Rated motor frequency	50.00	Hz
p311	Rated motor speed	1365	rpm
r330	Rated motor slip	9.00	%
p335	Motor cooling	Self-cooled: Using shaft mounted fan attached to motor (0)	-
p340	Calculation of motor parameters	No calculation (0)	-
p346	Magnetization time	0.070	s
p347	Demagnetization time	0.175	s
p350	Stator resistance (line-to-line)	10.72924	Ohm
p610	Motor I2t reaction	Warning, no reaction, trip F0011 (2)	-
p611	Motor I2t time constant	669	s
p614	Motor I2t overload warning level	110.0	%

The reproduction, transmission or use of this document or its contents is not permitted without express written authority. Offenders will be liable for damages. All rights, including rights created by patent grant or registration or a utility model or design, are reserved.

Status	Modification	Date	Name		
				Date	02-09-2005
				Editor	
				Checked	
				Standard	

p640	Motor overload factor [%]	150.0	%
p700	Selection of command source	Terminal (2)	-
p701	Function of digital input 0	ON/OFF1 (1)	-
p702	Function of digital input 1	Reverse (12)	-
p703	Function of digital input 2	Fault acknowledge (9)	-
p704	Function of digital input 3	Digital input disabled (0)	-
p719[0]	Selection of cmd. _freq. setp., 1st Control source (Hand)	Cmd = P0700 Setpoint = P1000 (0)	-
r722	CO/BO: Binary input values	0H	-
p724	Debounce time for digital inputs	12.3 ms debounce time (3)	-
p727	2wire/3wire control method	Siemens (start/dir) (0)	-
p731	Function of digital output 0	Drive fault active (5)	-
r747	CO/BO: State of digital outputs	1H	-
p748	Invert digital outputs	0H	-
r752	Act. input of ADC	0.00	V
p753	Smooth time ADC	3	ms
r754	Act. ADC value after scaling [%]	0.00	%
p757	Value x1 of ADC scaling	0.00	V
p758	Value y1 of ADC scaling	0.00	%
p759	Value x2 of ADC scaling	10.00	V
p760	Value y2 of ADC scaling	100.00	%
p761	Width of ADC deadband	0.00	V
p802	Transfer data to BOP	Disabled (0)	-
p803	Transfer data from BOP	Disabled (0)	-
p810	Source of Hand/Auto	Disabled (0)	-
p927	Parameter changeable via	FH	-
r947[0]	Last fault code, Recent fault trip --, fault 1	0	-
r949[0]	Fault value, Recent fault trip --, fault value 1	0	-
r964[0]	Firmware version data, Company (Siemens = 42)	42	-
p970	Factory reset	Disabled (0)	-
p971	Transfer data from RAM to EEPROM	Disabled (0)	-
p1000	Selection of frequency setpoint	Analog setpoint (2)	-
p1001	Fixed frequency 1	0.00	Hz
p1002	Fixed frequency 2	5.00	Hz
p1003	Fixed frequency 3	10.00	Hz
r1024	CO: Act. fixed frequency	0.00	Hz
p1031	Setpoint memory of the MOP	MOP setpoint will not be stored (0)	-
p1032	Inhibit negative MOP setpoints	Neg. MOP setpoint inhibited (1)	-
p1040	Setpoint of the MOP	5.00	Hz
r1050	CO: Act. Output freq. of the MOP	5.00	Hz
p1058	JOG frequency	5.00	Hz
p1060	JOG ramp-up/down time	10.00	s
r1078	CO: Total frequency setpoint	0.00	Hz
p1080	Min. frequency	8.00	Hz
p1082	Max. frequency	80.00	Hz
p1091	Skip frequency	0.00	Hz
p1110	Inhibit neg. freq. setpoint	Disable (0)	-
p1120	Ramp-up time	1.00	s
p1121	Ramp-down time	1.00	s
p1130	Ramp rounding time	0.00	s
p1134	Rounding type	Continuous smoothing (0)	-
p1135	OFF3 ramp-down time	5.00	s

The reproduction, transmission or use of th. ocument or its contents is not permitted without express written authority. Offenders will be liable for damages. All rights, including rights created by patent grant or registration or a utility model or sdesign, are reserved.

Status	Modification	Date	Name		
				Date	02-09-2005
				Editor	
				Checked	
				Standard	

r1170	CO: Frequency setpoint after RFG	0.00	Hz
p1200	Flying start	Flying start disabled (0)	-
p1202	Motor-current: Flying start	100	%
p1203	Search rate: Flying start	100	%
p1210	Automatic restart	Trip reset after power on (1)	-
p1215	Holding brake enable	Motor holding brake disabled (0)	-
p1216	Holding brake release delay	1.0	s
p1217	Holding time after ramp down	1.0	s
p1232	DC braking current	100	%
p1233	Duration of DC braking	0	s
p1234	DC braking start frequency	650.00	Hz
p1236	Compound braking current	0	%
p1240	Configuration of Vdc controller	Vdc-max controller enabled (1)	-
p1300	Control mode	V/f with linear characteristic (0)	-
p1310	Continuous boost	50.0	%
p1311	Acceleration boost	0.0	%
p1312	Starting boost	0.0	%
p1316	Boost end frequency	37.6	%
p1320	Programmable V/f freq. coord. 1	0.00	Hz
p1321	Programmable V/f volt. coord. 1	0.0	V
p1322	Programmable V/f freq. coord. 2	0.00	Hz
p1323	Programmable V/f volt. coord. 2	0.0	V
p1324	Programmable V/f freq. coord. 3	0.00	Hz
p1325	Programmable V/f volt. coord. 3	0.0	V
p1334	Slip compens. activation range	6.0	%
p1335	Slip compensation	0.0	%
p1340	Imax controller prop. gain	0.000	-
p1800	Pulse frequency	8	kHz
r1801	CO: Act. pulse frequency	2	kHz
p2000	Reference frequency	80.00	Hz
p2010	USS baudrate	9600 baud (6)	-
p2011	USS address	0	-
p2012	USS PZD length	4	-
p2013	USS PKW length	Variable (127)	-
p2014	USS telegram off time	0	ms
r2018[0]	CO: PZD from USS, Received word 0	1	-
r2024	USS error-free telegrams	162	-
r2025	USS rejected telegrams	155	-
r2026	USS character frame error	0	-
r2027	USS overrun error	154	-
r2028	USS parity error	0	-
r2029	USS start not identified	1	-
r2030	USS BCC error	0	-
r2031	USS length error	0	-
r2036	BO: CtrlWrd1 from USS	1H	-
r2037	BO: CtrlWrd2 from USS	0H	-
p2106	External fault via USS	Disable (0)	-
r2110[0]	Warning number, Recent Warnings --, warning 1	0	-
r2114[0]	Run time counter, System Time, Seconds, Upper Word	0	-
p2167	Switch-off frequency f_off	1.00	Hz
p2172	Threshold DC-link voltage	0	V

The reproduction, transmission or use of this document or its contents is not permitted without express written authority. Offenders will be liable for damages. All rights, including rights created by patent grant or registration or a utility model or sdesign, are reserved.

Status	Modification	Date	Name	
				Date 02-09-2005
				Editor
				Checked
				Standard

p3900	End of quick commissioning	No quick commissioning (0)	-

The reproduction, transmission or use of th. .ocument or its contents is not permitted without express written authority. Offenders will be liable for damages. All rights, including rights created by patent grant or registration or a utility model or sdesign, are reserved.

Status	Modification	Date	Name		
				Date	02-09-2005
				Editor	
				Checked	
				Standard	

Parameter	Parameter text	Value SINAMICS G110 Creampump	Unit
r2	Drive state	Drive ready (1)	-
p3	User access level	Expert: For expert use only. (3)	-
p4	Parameter filter	All parameters (0)	-
p5	Display selection	21	-
p10	Commissioning parameter	Ready (0)	-
p14[0]	Store mode, USS	Volatile (RAM) (0)	-
r18	Firmware version	1066192077	-
r19	CO/BO: BOP control word	2H	-
r20	CO: Freq. setpoint before RFG	8.00	Hz
r21	CO: Act. frequency	0.00	Hz
r24	CO: Act. output frequency	0.00	Hz
r25	CO: Act. output voltage	0	V
r26	CO: Act. DC-link voltage	320	V
r27	CO: Act. output current	0.00	A
r34	CO: Motor temperature (i2t)	0.1	%
r52	CO/BO: Act. status word 1	B831H	-
r53	CO/BO: Act. status word 2	300H	-
r54	CO/BO: Act. control word 1	7EH	-
r55	CO/BO: Act. control word 2	2000H	-
r56	CO/BO: Status of motor control	3H	-
r67	CO: Act. output current limit	4.65	A
p100	Europe / North America	Europe [kW], motor base frequency is 50 Hz (0)	-
r127	Analogue / USS Variant	Analogue (0)	-
r200	Act. power stack code number	4018	-
p201	Power stack code number	4018	-
r206	Rated inverter power [kW] / [hp]	0.55	-
r207[0]	Rated inverter current, Rated inverter current	3.20	A
r209	Maximum inverter current	4.80	A
p290	Inverter overload reaction	Reduce output frequency (0)	-
p295	Inverter fan off delay time	0	s
p304	Rated motor voltage	230	V
p305	Rated motor current	3.10	A
p307	Rated motor power	0.55	-
p308	Rated motor cosPhi	0.000	-
p309	Rated motor efficiency	0.0	%
p310	Rated motor frequency	50.00	Hz
p311	Rated motor speed	1365	rpm
r330	Rated motor slip	9.00	%
p335	Motor cooling	Self-cooled: Using shaft mounted fan attached to motor (0)	-
p340	Calculation of motor parameters	No calculation (0)	-
p346	Magnetization time	0.070	s
p347	Demagnetization time	0.175	s
p350	Stator resistance (line-to-line)	10.72924	Ohm
p610	Motor I2t reaction	Warning, no reaction, trip F0011 (2)	-
p611	Motor I2t time constant	669	s
p614	Motor I2t overload warning level	110.0	%

The reproduction, transmission or use of this document or its contents is not permitted without express written authority. Offenders will be liable for damages. All rights, including rights created by patent grant or registration of a utility model or design, are reserved.

p640	Motor overload factor [%]	150.0	%
p700	Selection of command source	Terminal (2)	-
p701	Function of digital input 0	ON reverse /OFF1 (2)	-
p702	Function of digital input 1	Reverse (12)	-
p703	Function of digital input 2	Fault acknowledge (9)	-
p704	Function of digital input 3	Digital input disabled (0)	-
p719[0]	Selection of cmd. freq. setp., 1st Control source (Hand)	Cmd = P0700 Setpoint = P1000 (0)	-
r722	CO/BO: Binary input values	0H	-
p724	Debounce time for digital inputs	12.3 ms debounce time (3)	-
p727	2wire/3wire control method	Siemens (start/dir) (0)	-
p731	Function of digital output 0	Drive fault active (5)	-
r747	CO/BO: State of digital outputs	1H	-
p748	Invert digital outputs	0H	-
r752	Act. input of ADC	0.00	V
p753	Smooth time ADC	3	ms
r754	Act. ADC value after scaling [%]	0.00	%
p757	Value x1 of ADC scaling	0.00	V
p758	Value y1 of ADC scaling	0.00	%
p759	Value x2 of ADC scaling	10.00	V
p760	Value y2 of ADC scaling	100.00	%
p761	Width of ADC deadband	0.00	V
p802	Transfer data to BOP	Disabled (0)	-
p803	Transfer data from BOP	Disabled (0)	-
p810	Source of Hand/Auto	Disabled (0)	-
p927	Parameter changeable via	FH	-
r947[0]	Last fault code, Recent fault trip --, fault 1	0	-
r949[0]	Fault value, Recent fault trip --, fault value 1	0	-
r964[0]	Firmware version data, Company (Siemens = 42)	42	-
p970	Factory reset	Disabled (0)	-
p971	Transfer data from RAM to EEPROM	Disabled (0)	-
p1000	Selection of frequency setpoint	Analog setpoint (2)	-
p1001	Fixed frequency 1	0.00	Hz
p1002	Fixed frequency 2	5.00	Hz
p1003	Fixed frequency 3	10.00	Hz
r1024	CO: Act. fixed frequency	0.00	Hz
p1031	Setpoint memory of the MOP	MOP setpoint will not be stored (0)	-
p1032	Inhibit negative MOP setpoints	Neg. MOP setpoint inhibited (1)	-
p1040	Setpoint of the MOP	5.00	Hz
r1050	CO: Act. Output freq. of the MOP	5.00	Hz
p1058	JOG frequency	5.00	Hz
p1060	JOG ramp-up/down time	10.00	s
r1078	CO: Total frequency setpoint	0.00	Hz
p1080	Min. frequency	8.00	Hz
p1082	Max. frequency	100.00	Hz
p1091	Skip frequency	0.00	Hz
p1110	Inhibit neg. freq. setpoint	Disable (0)	-
p1120	Ramp-up time	1.00	s
p1121	Ramp-down time	1.00	s
p1130	Ramp rounding time	0.00	s
p1134	Rounding type	Continuous smoothing (0)	-
p1135	OFF3 ramp-down time	5.00	s

The reproduction, transmission or use of this document or its contents is not permitted without express written authority. Offenders will be liable for damages. All rights, including rights created by patent grant or registration or a utility model or design, are reserved.

Status	Modification	Date	Name	Standard
			Date	02-09-2005
			Editor	
			Checked	

r1170	CO: Frequency setpoint after RFG	0.00	Hz
p1200	Flying start	Flying start disabled (0)	-
p1202	Motor-current: Flying start	100	%
p1203	Search rate: Flying start	100	%
p1210	Automatic restart	Trip reset after power on (1)	-
p1215	Holding brake enable	Motor holding brake disabled (0)	-
p1216	Holding brake release delay	1.0	s
p1217	Holding time after ramp down	1.0	s
p1232	DC braking current	100	%
p1233	Duration of DC braking	0	s
p1234	DC braking start frequency	650.00	Hz
p1236	Compound braking current	0	%
p1240	Configuration of Vdc controller	Vdc-max controller enabled (1)	-
p1300	Control mode	V/f with linear characteristic (0)	-
p1310	Continuous boost	50.0	%
p1311	Acceleration boost	0.0	%
p1312	Starting boost	0.0	%
p1316	Boost end frequency	37.6	%
p1320	Programmable V/f freq. coord. 1	0.00	Hz
p1321	Programmable V/f volt. coord. 1	0.0	V
p1322	Programmable V/f freq. coord. 2	0.00	Hz
p1323	Programmable V/f volt. coord. 2	0.0	V
p1324	Programmable V/f freq. coord. 3	0.00	Hz
p1325	Programmable V/f volt. coord. 3	0.0	V
p1334	Slip compens. activation range	6.0	%
p1335	Slip compensation	0.0	%
p1340	Imax controller prop. gain	0.000	-
p1800	Pulse frequency	8	kHz
r1801	CO: Act. pulse frequency	2	kHz
p2000	Reference frequency	100.00	Hz
p2010	USS baudrate	9600 baud (6)	-
p2011	USS address	1	-
p2012	USS PZD length	4	-
p2013	USS PKW length	Variable (127)	-
p2014	USS telegram off time	0	ms
r2018[0]	CO: PZD from USS, Received word 0	1	-
r2024	USS error-free telegrams	167	-
r2025	USS rejected telegrams	0	-
r2026	USS character frame error	0	-
r2027	USS overrun error	0	-
r2028	USS parity error	0	-
r2029	USS start not identified	0	-
r2030	USS BCC error	0	-
r2031	USS length error	0	-
r2036	BO: CtrlWrd1 from USS	1H	-
r2037	BO: CtrlWrd2 from USS	0H	-
p2106	External fault via USS	Disable (0)	-
r2110[0]	Warning number, Recent Warnings --, warning 1	0	-
r2114[0]	Run time counter, System Time, Seconds, Upper Word	0	-
p2167	Switch-off frequency f_off	1.00	Hz
p2172	Threshold DC-link voltage	0	V

The reproduction, transmission or use of th. ocument or its contents is not permitted without express written authority. Offenders will be liable for damages. All rights, including rights created by patent grant or registration or a utility model or sdesign, are reserved.

Status	Modification	Date	Name		
				Date	02-09-2005
				Editor	
				Checked	
				Standard	

p3900	End of quick commissioning	No quick commissioning (0)	-

The reproduction, transmission or use of th. ocument or its contents is not permitted without express written authority. Offenders will be liable for damages. All rights, including rights created by patent grant or registration or a utility model or sdesign, are reserved.

Status	Modification	Date	Name		
				Date	02-09-2005
				Editor	
				Checked	
				Standard	

WCB Ice Cream
An Alliance Company

DANFOSS EKC 366
SETUP

26-03-2007

SETUP	REGISTER	VALUE
Valve basic temperature reference CVQ		110
Valve basic temperature reference KVQ		100
Select temperature Unit (C/F)	R05	C
Input signals temperature influence KVQ	R06	-60
Input signals temperature influence CVQ 027B-1140 (0-6 Bar) (until 010903)	R06	-60
Input signals temperature influence CVQ 027B-1139 (-1-5 Bar) (from 010903)	R06	-70
Controllers Adress	o03	1
ON/OFF switch (service pin message)	o04	-
Define Input Signal:	10	
WS GM	10	3
(WS GS until 01.03) WS GS	10	(3)1
WS GA	10	1
MF	10	(3)1
Language	11	0
Supply Voltage Frequency	12	50

Electrical wiring diagram: T58175

WCB
Ice Cream A/S

An Alliance Company

Project	:	MF 600 GA
Customer	:	
Machine type	:	MF600 GA V3.0
Constructor	:	JRO
Manufacturing date	:	27. Maj. 2005

Type	: MF 600 GA
Supply voltage	: 3 X 400 V + N + PE / 50Hz
Control voltage	: 24 Vac/Vdc
Order No.	: D58175

Colours for internal wiring

Power circuits:

0 VAC	Neutral	Neutral conductor	Light Blue
230/400 VAC	Phase	Phase conductor	Black
	PE	PE WIRE	Green/Yellow

Control Circuits:

0 VAC	Ref.	Neutral conductor	Red
230 VAC	Phase	Phase conductor	Red
0 VAC	Ref.	Neutral conductor	Red
24 VAC	Line	Line conductor	Red
0 VDC	Ref.	Ref. conductor	Blue
24 VDC	Plus	Plus conductor	Blue
		External	Orange

THIS DRAWING MUST NOT BE COPIED OR DISCLOSED TO A THIRD PARTY WITHOUT OUR PERMISSION

DWG No. D58175

WCB

WCB ICE CREAM
GRAHAM BELLS VEJ 6
DK-8200 AARHUS N, DENMARK

Rev.	Const.	Date
A		
B		
C		
Made	NSU	27. Maj. 2005

FRONT PAGE

Customer

Drawing No. D58175

Order No.

Page: 1

Page overview

Coloum X: an automatically created page was manually reworked

WUPJ002E 01.03.1994

Page	Designation	Additional field	Date	Revisor	X
1	FRONT PAGE		27. Maj. 2005	NSU	
2	DRAWING LIST		25. Aug. 2005	JRO	
3	TYPE PLATE		27. Maj. 2005	JRO	
4	TYPE PLATE NH3		27. Maj. 2005	JRO	
10	MOTOR MAIN CIRCUITS FREON MACHINES		25. Aug. 2005	MIJ	
10.1	MOTOR MAIN CIRCUITS NH3 MACHINES ONLY		25. Aug. 2005	MIJ	
11	230Vac, 24Vac AND 24Vdc SUPPLY		27. Maj. 2005	JRO	
30	DANFOSS CVQ CONTROL VALVE		27. Maj. 2005	JRO	
70	EMERGENCY STOP RELAY		27. Maj. 2005	MIJ	
80	DASHER SOFTSTARTER CONTROL CONNECTIONS		03. Jun. 2005	JRO	
81	REFRIGERATION VALVE CONTROL		27. Maj. 2005	JRO	
84	230VAC AUXILLAR CIRCUITS BITZER COMPRESSOR		03. Jun. 2005	MIJ	
85	230VAC AUXILLAR CIRCUITS COPELAND COMPRESSOR		03. Jun. 2005	MIJ	
90	CONNECTION OF AIR FLOW METER		25. Aug. 2005	MIJ	
95	CONTROL SIGNALS PUMP INVERTERS		25. Aug. 2005	JRO	
100	ANALOG INPUTS IW 752 - IW 758		25. Aug. 2005	JRO	
101	ANALOG IN. IW 760 ANALOG OUT. QW 752 - 754		25. Aug. 2005	JRO	
102	DIGITAL INPUTS I 126.0 - I 126.7		25. Aug. 2005	JRO	
103	DIGITAL INPUTS I 124.0 - I 124.7		25. Aug. 2005	JRO	
104	DIGITAL INPUTS I 125.0 - I 125.7		25. Aug. 2005	JRO	
105	DIGITAL OUTPUTS Q 124.0 - Q 124.7		25. Aug. 2005	JRO	
106	DIGITAL OUTPUTS Q 125.0 - Q 125.7		25. Aug. 2005	JRO	
107	ANALOG INPUT IW 256 PRODUCT TEMPERATURE		25. Aug. 2005	JRO	
108	ANALOG OUTPUTS QW 324 - QW 326		25. Aug. 2005	JRO	
200	SERIAL COMMUNICATIONS SIEMENS <> OPERATOR PANEL		27. Maj. 2005	MIJ	

THIS DRAWING MUST NOT BE COPIED OR DISCLOSED TO A THIRD PARTY WITHOUT OUR PERMISSION

DWG No. D58175

WCB

WCB ICE CREAM
GRAHAM BELLS VEJ 6
DK-8200 AARHUS N, DENMARK

Rev.	Const.	Date
A		
B		
C		
Made	JRO	25. Aug. 2005

DRAWING LIST

Customer

Drawing No. D58175

Order No.

Page: 2

WCB Ice Cream A/S

An Alliance Company

Type	:	MF600
Year	:	2005
Ue	:	3 x 400V+N+PE / 50Hz
Ie	:	42 A
Imax	:	63 A
Ic	:	50kA
P	:	20.2 KW
Drawing No.	:	D58175

THIS DRAWING MUST NOT BE COPIED OR DISCLOSED TO A THIRD PARTY WITHOUT OUR PERMISSION

DWG No. D58175

WCB

WCB ICE CREAM
GRAHAM BELLS VEJ 6
DK-8200 AARHUS N. DENMARK

Rev.	Const.	Date
A		
B		
C		
Made	JRD	16. Sep. 2005

TYPE PLATE

Customer

Drawing No. D58175

Order No.

Page: 3

WCB Ice Cream A/S

An Alliance Company

Type	:	MF600 NH3
Year	:	2005
Ue	:	3 x 400V +N+PE /50 Hz
Ie	:	20 A
Imax	:	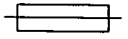 32 A
Ic	:	50kA
P	:	8.9 KW
Drawing No.	:	D58175

THIS DRAWING MUST NOT BE COPIED OR DISCLOSED TO A THIRD PARTY WITHOUT OUR PERMISSION

DWG No. D58175

WCB

WCB ICE CREAM
GRAHAM BELLS VEJ 6
DK-8200 AARHUS N, DENMARK

Rev.	Const.	Date
A		
B		
C		
Made	JRO	01. Sep. 2005

TYPE PLATE NH3

Customer

Drawing No. D58175

Order No.

Page: 4

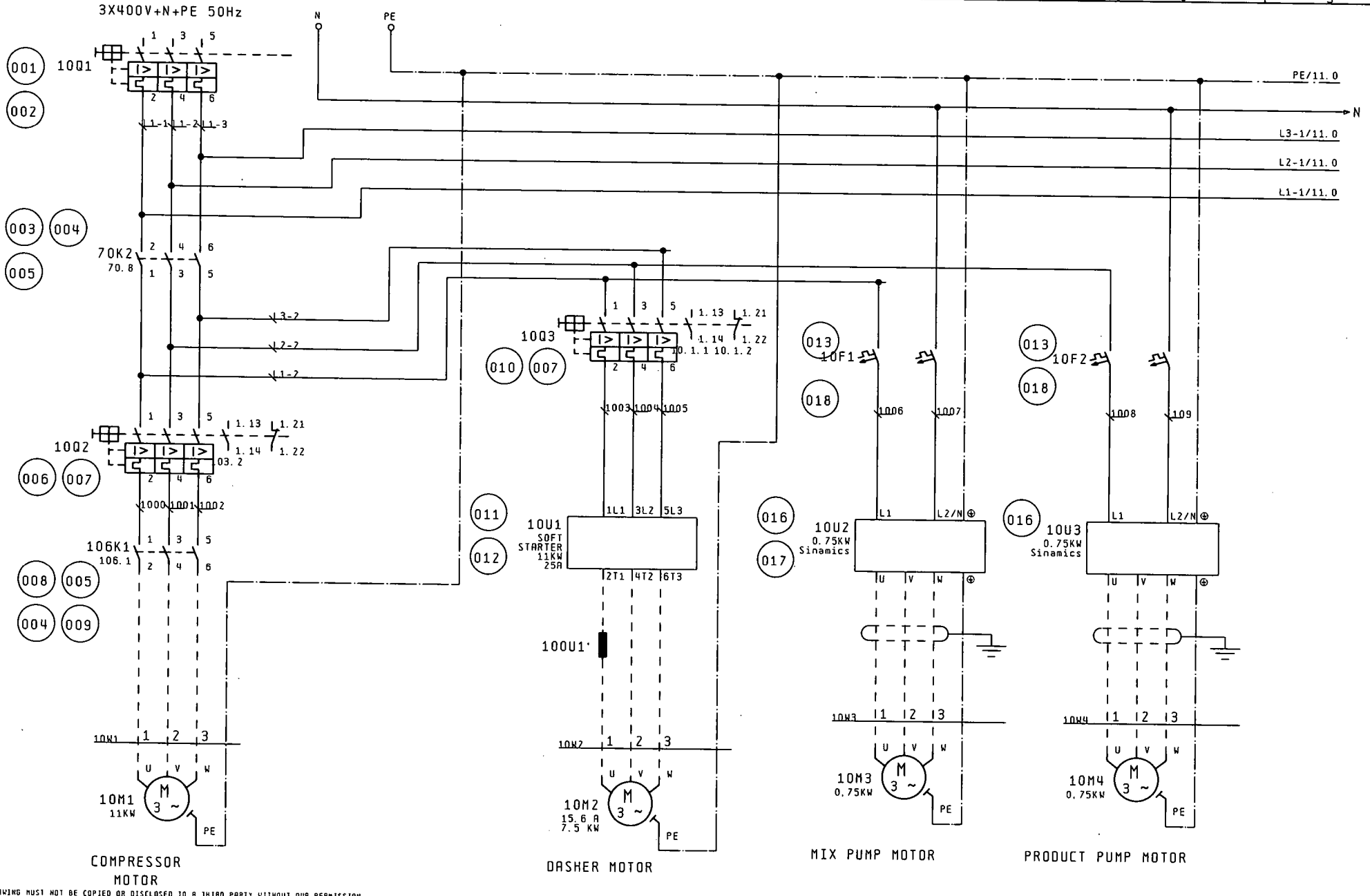

THIS DRAWING MUST NOT BE COPIED OR DISCLOSED TO A THIRD PARTY WITHOUT OUR PERMISSION

10.1

DWG No. D58175

WCB

WCB ICE CREAM
GRAHAM BELLS VEJ 6
DK-8200 AARHUS N, DENMARK

Rev.	Const.	Date
A		
B		
C		
Made	MIJ	24. Jan. 2007

MOTOR MAIN CIRCUITS
FREON MACHINES

Customer

Drawing No. D58175

Order No.

Page: 10

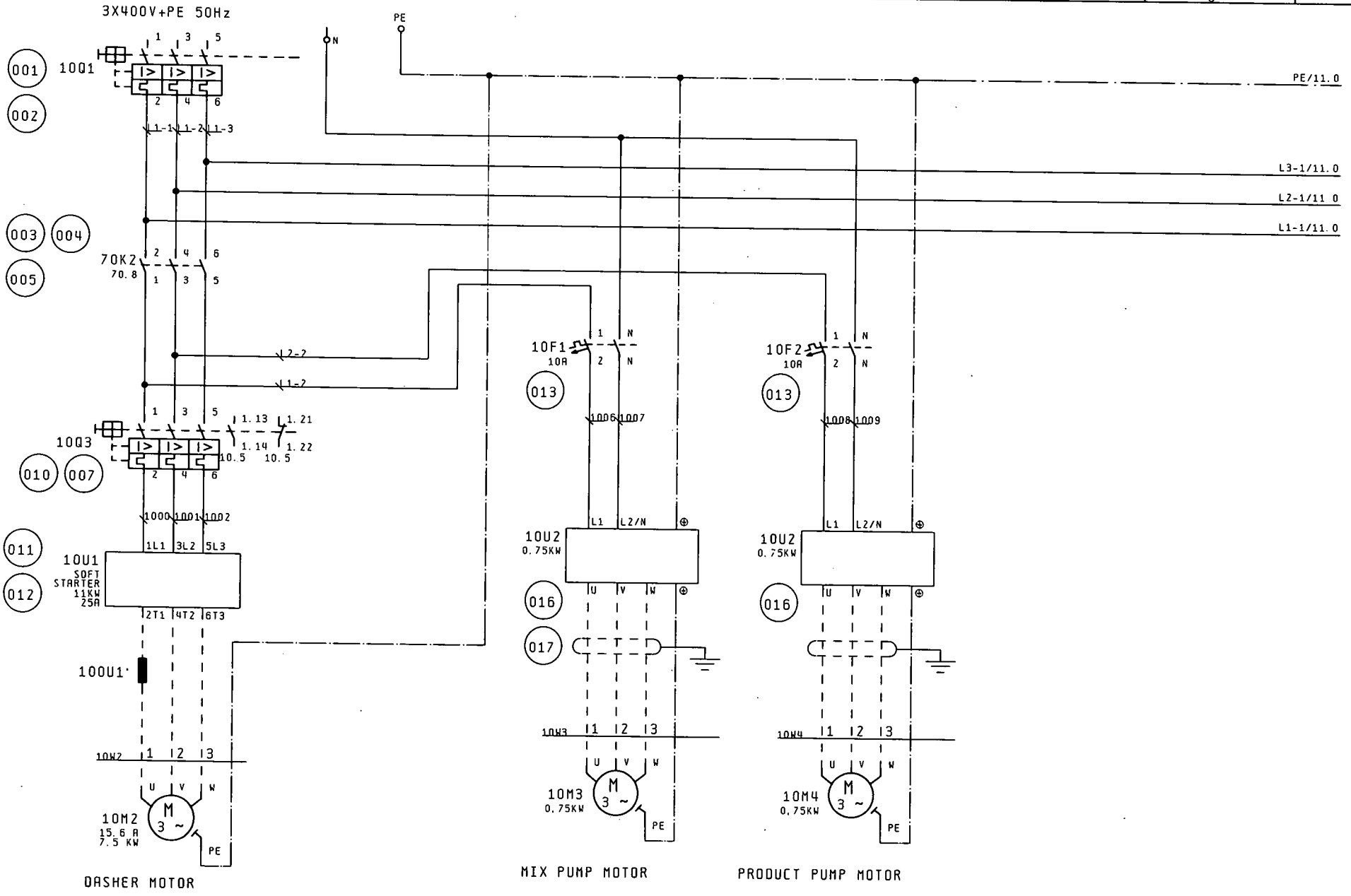

THIS DRAWING MUST NOT BE COPIED OR DISCLOSED TO A THIRD PARTY WITHOUT OUR PERMISSION

DWG No. D58175

WCB

WCB ICE CREAM
GRAHAM BELLS VEJ 6
DK-8200 AARHUS N, DENMARK

Rev.	Const.	Date
A		
B		
C		
Made	MIJ	24. Jan. 2007

MOTOR MAIN CIRCUITS
NH3 MACHINES ONLY

Customer

Drawing No. D58175

Order No.

Page: 10. 1

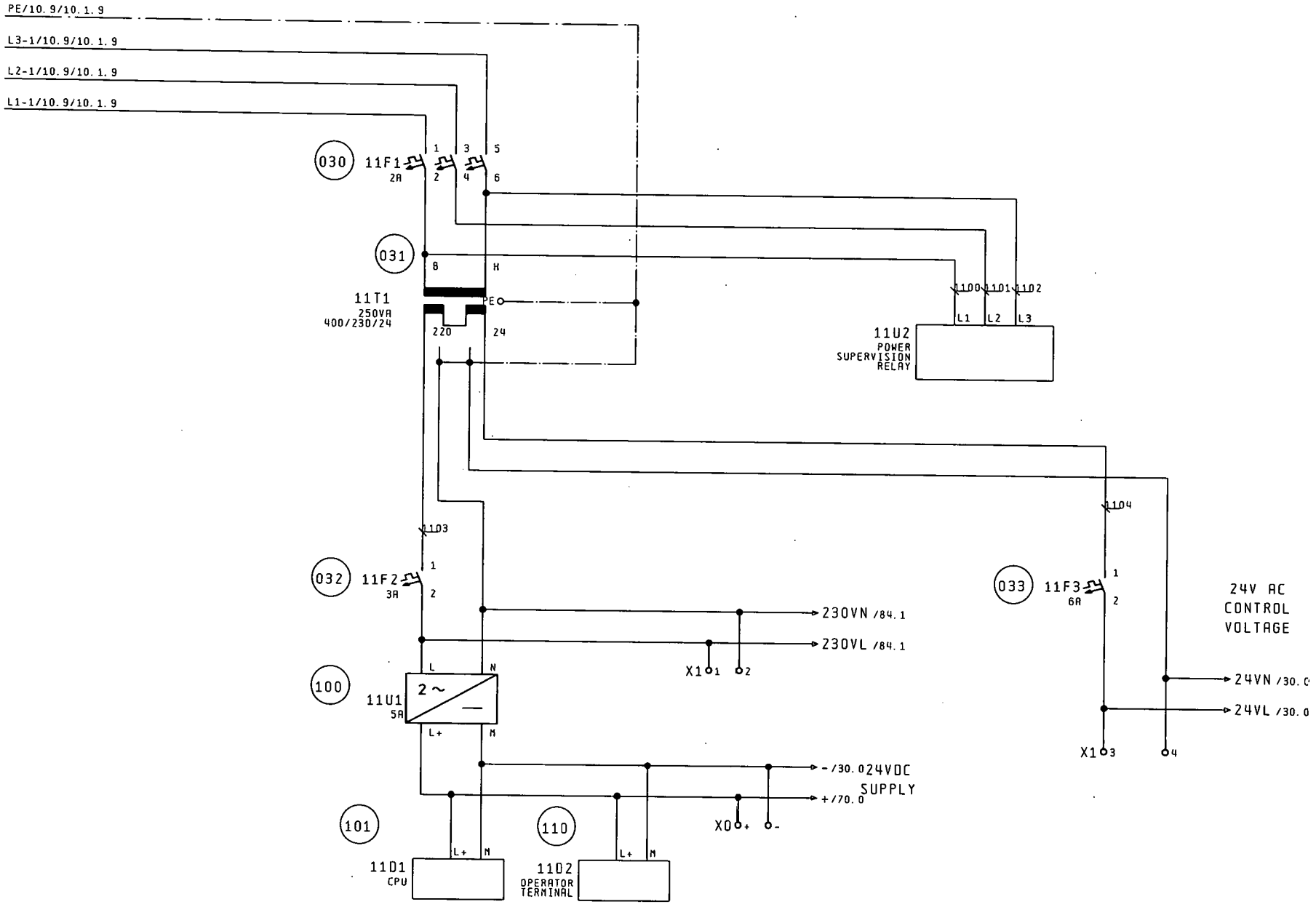

THIS DRAWING MUST NOT BE COPIED OR DISCLOSED TO A THIRD PARTY WITHOUT OUR PERMISSION

DWG No. D58175

WCB

WCB ICE CREAM
GRAHAM BELLS VEJ 6
DK-8200 AARHUS N, DENMARK

Rev.	Const.	Date
A		
B		
C		
Made	JRO	19. Sep. 2005

230Vac, 24Vac AND 24Vdc SUPPLY

Customer

Drawing No. D58175

Order No.

Page: 11

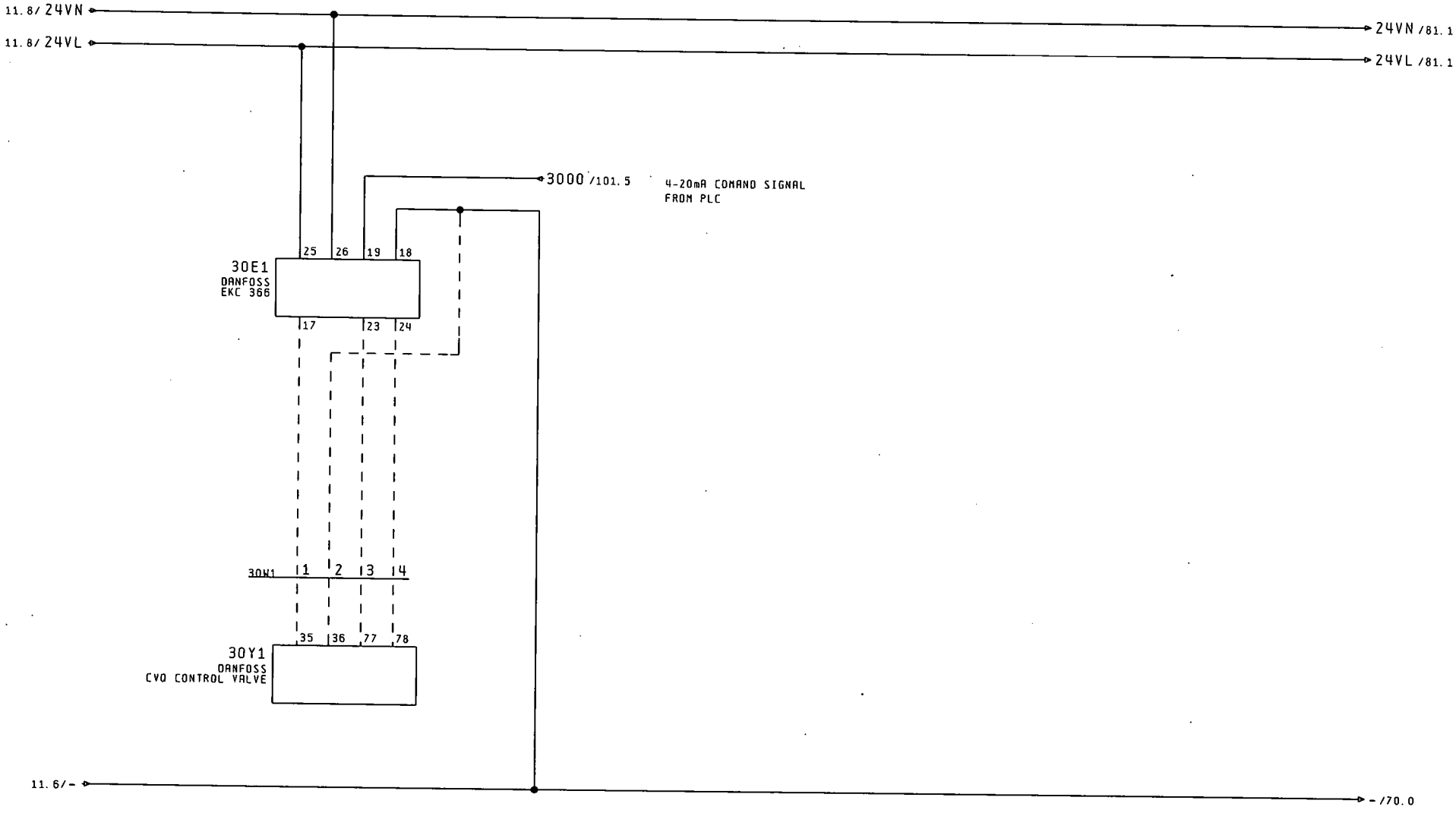

THIS DRAWING MUST NOT BE COPIED OR DISCLOSED TO A THIRD PARTY WITHOUT OUR PERMISSION

DWG No. D58175

WCB

WCB ICE CREAM
GRAHAM BELLS VEJ 6
DK-8200 AARHUS N, DENMARK

Rev.	Const.	Date .
A		
B		
C		
Made	JRO	27. Maj. 2005

DANFOSS CVQ CONTROL VALVE

Customer

Drawing No. D58175

Order No.

Page: 30

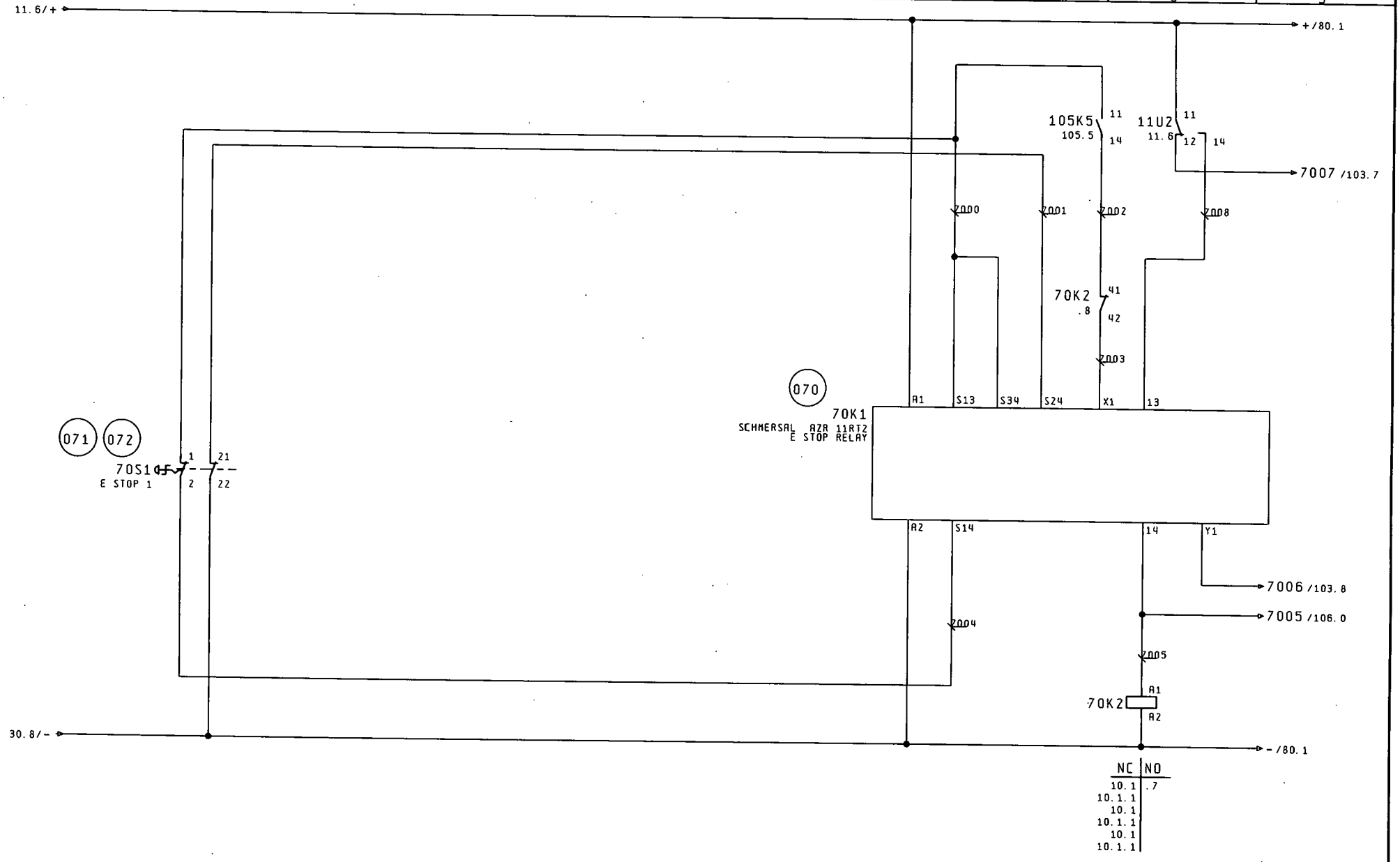

THIS DRAWING MUST NOT BE COPIED OR DISCLOSED TO A THIRD PARTY WITHOUT OUR PERMISSION

80

DWG No. D58175

WCB

WCB ICE CREAM
GRAHAM BELLS VEJ 6
DK-8200 AARHUS N, DENMARK

Rev.	Const.	Date
A		
B		
C		
Made	MIJ	27. Maj. 2005

EMERGENCY STOP
RELAY

Customer

Drawing No. D58175

Order No.

=
+
Page: 70

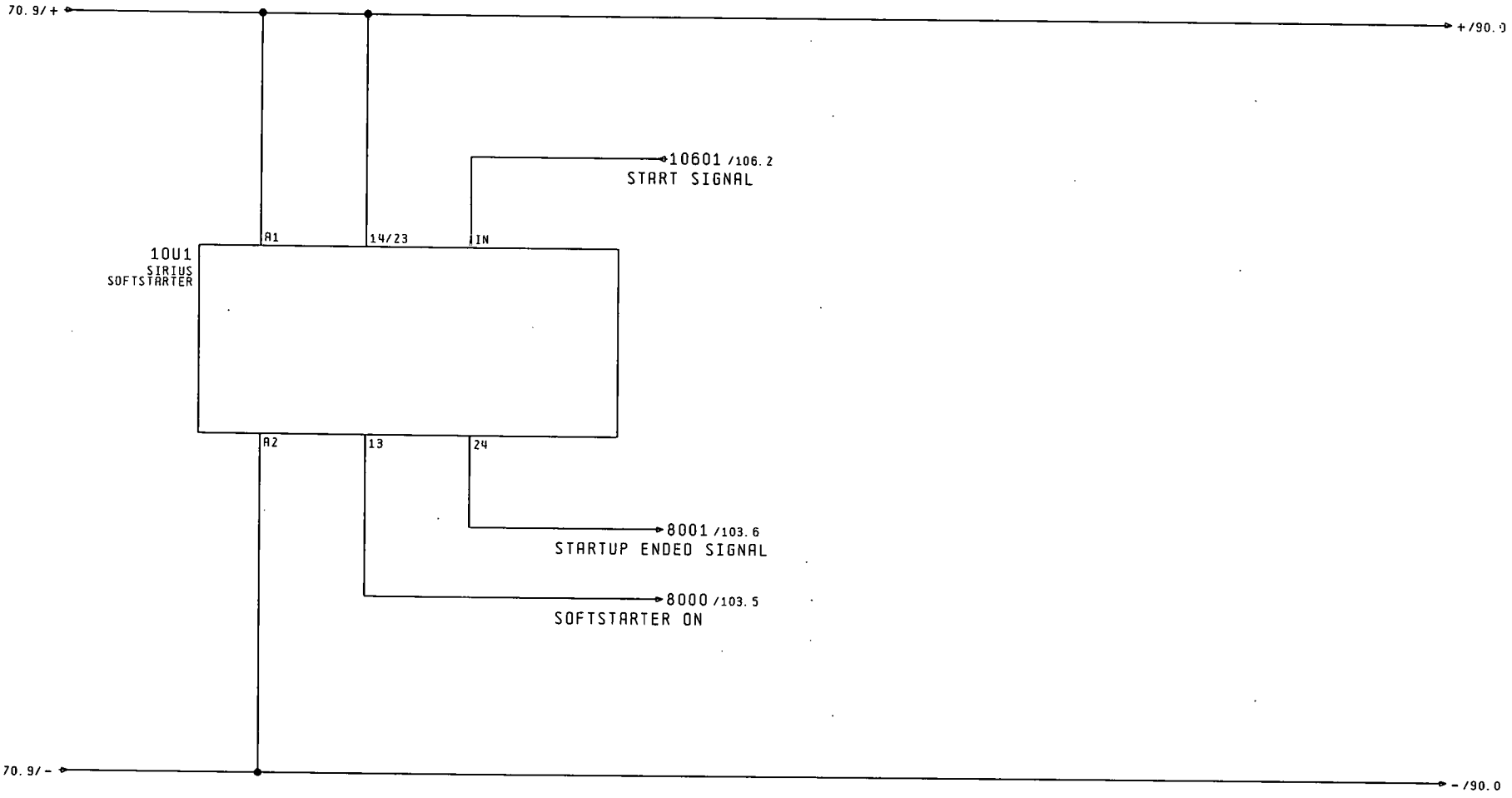

THIS DRAWING MUST NOT BE COPIED OR DISCLOSED TO A THIRD PARTY WITHOUT OUR PERMISSION

DWG No. D58175

WCB

WCB ICE CREAM
GRAHAM BELLS VEJ 6
DK-8200 AARHUS N, DENMARK

Rev.	Const.	Date
A		
B		
C		
Made	JRO	19. Sep. 2005

DASHER SOFTSTARTER
CONTROL CONNECTIONS

Customer

Drawing No. D58175

Order No.

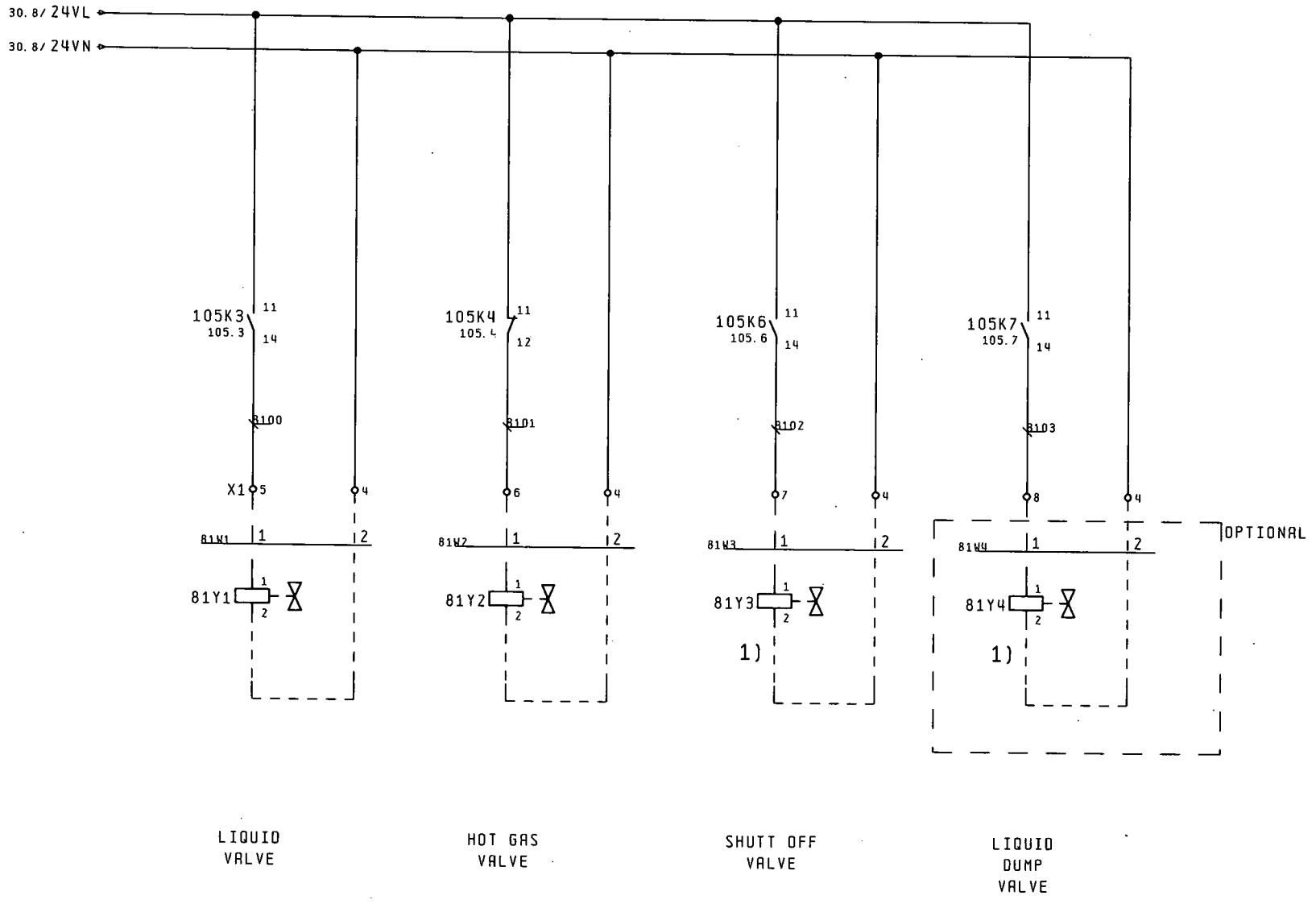

1) NH3 MACHINES ONLY

THIS DRAWING MUST NOT BE COPIED OR DISCLOSED TO A THIRD PARTY WITHOUT OUR PERMISSION

DWG No. D58175

WCB

WCB ICE CREAM
GRAHAM BELLS VEJ 6
DK-8200 AARHUS N. DENMARK

Rev.	Const.	Date
A		
B		
C		
Made	JRO	01. Sep. 2005

REFRIGERATION VALVE CONTROL

Customer

Drawing No. D58175

Order No.

Page: 81

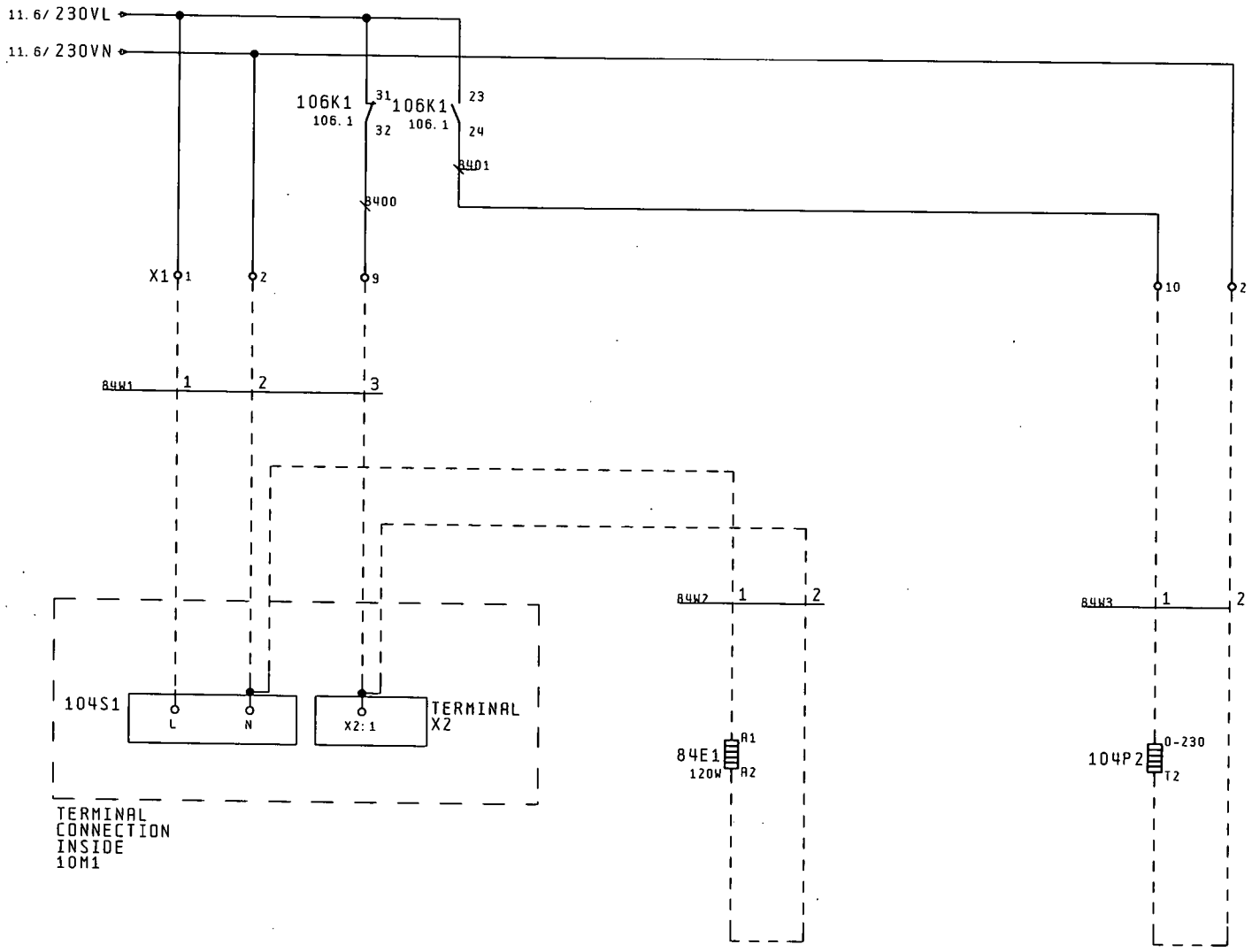

POWERSUPPLY FOR
THERMAL PROTECTION
IN COMPRESSORMOTOR

HEATING ELEMENT
COMPRESSOR OIL

HEATING ELEMENT
IN LOW PRESSURE
SWITCH

THIS PAGE IS NOT VALID FOR NH3 MACHINES

THIS DRAWING MUST NOT BE COPIED OR DISCLOSED TO A THIRD PARTY WITHOUT OUR PERMISSION

DWG No. D58175

WCB

WCB ICE CREAM
GRAHAM BELLS VEJ 6
DK-8200 AARHUS N, DENMARK

Rev.	Const.	Date
A		
B		
C		
Made	MIJ	19. Sep. 2005

230VAC AUXILLAR CIRCUITS
BITZER COMPRESSOR

Customer

Drawing No. D58175

Order No.

Page: 84

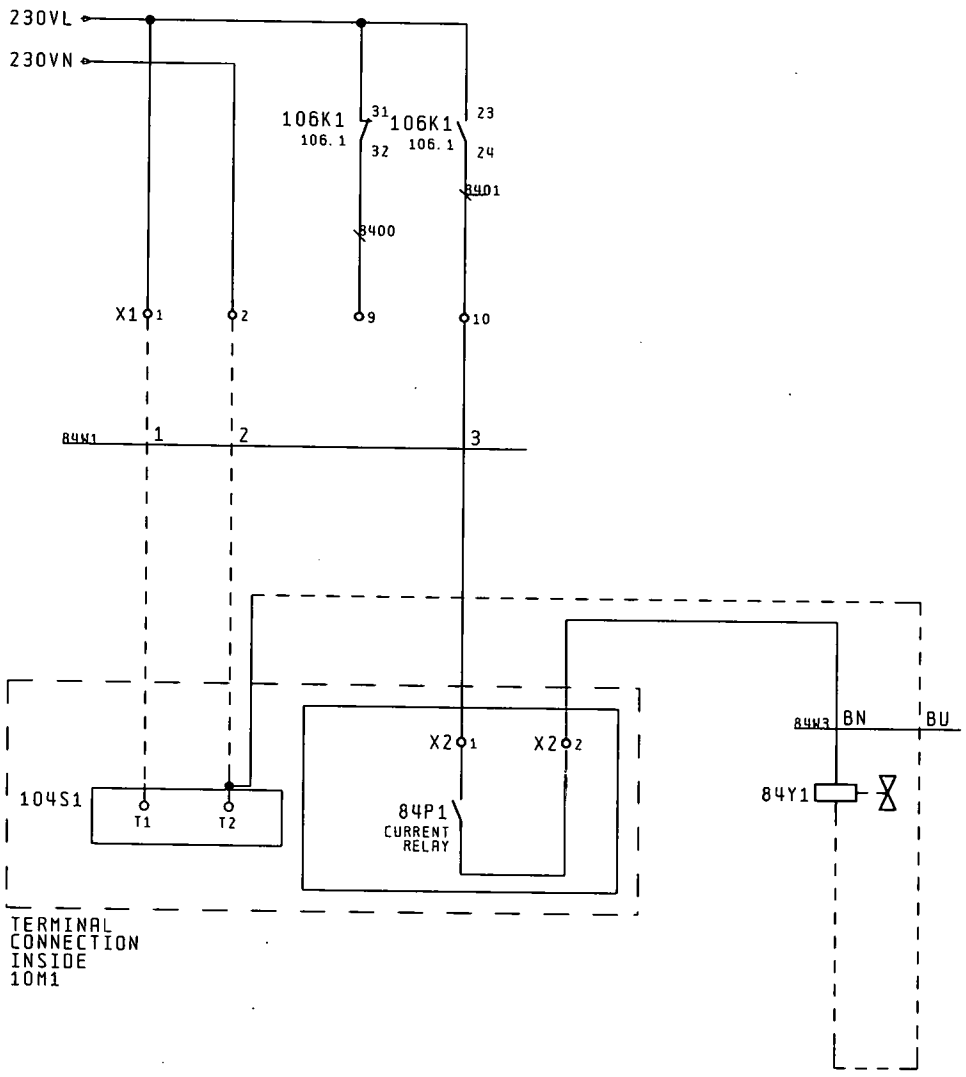

POWERSUPPLY FOR
THERMAL PROTECTION
IN COMPRESSORMOTOR

AUXILLARY
LIQUID SHUT OFF
VALVE

THIS PAGE IS NOT VALID FOR NH3 MACHINES

THIS DRAWING MUST NOT BE COPIED OR DISCLOSED TO A THIRD PARTY WITHOUT OUR PERMISSION

DWG No. D58175

WCB

WCB ICE CREAM
GRAHAM BELLS VEJ 6
DK-8200 AARHUS N, DENMARK

Rev.	Const.	Date
A		
B		
C		
Made	MIJ	19. Sep. 2005

230VAC AUXILLAR CIRCUITS
COPELAND COMPRESSOR

Customer

Drawing No. D58175

Order No.

Page: 85

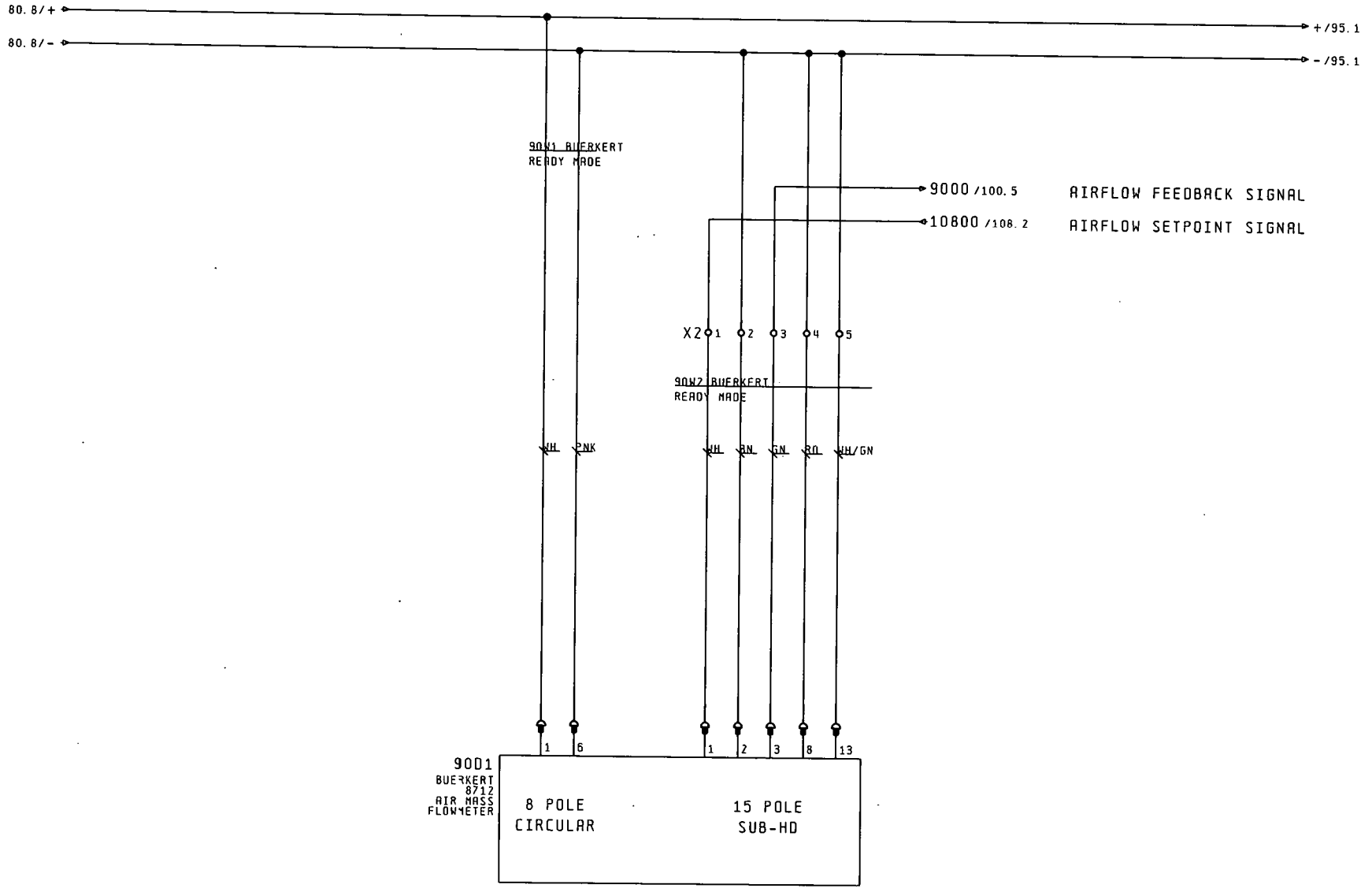

THIS DRAWING MUST NOT BE COPIED OR DISCLOSED TO A THIRD PARTY WITHOUT OUR PERMISSION

DWG No. D58175

WCB

WCB ICE CREAM
GRAHAM BELLS VEJ 6
DK-8200 AARHUS N, DENMARK

Rev.	Const.	Date
A		
B		
C		
Made	MIJ	25. Aug. 2005

CONNECTION OF AIR FLOW METER

Customer

Drawing No. D58175

Order No.

Page: 90

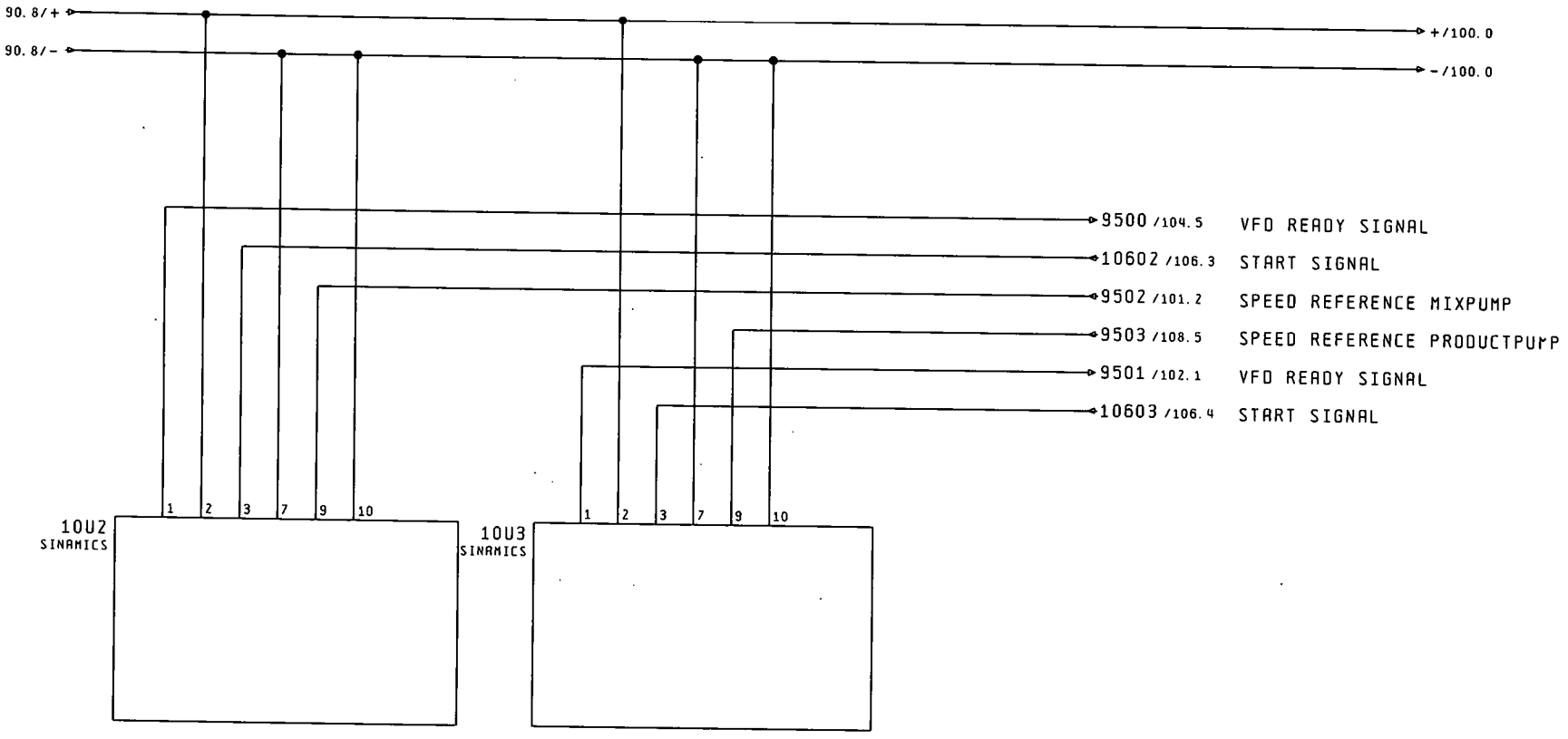

THIS DRAWING MUST NOT BE COPIED OR DISCLOSED TO A THIRD PARTY WITHOUT OUR PERMISSION

DWG No. D58175

WCB

WCB ICE CREAM
GRAHAM BELLS VEJ 6
DK-8200 AARHUS N, DENMARK

Rev.	Const.	Date
A		
B		
C		
Made	JRO	18. Okt. 2006

CONTROL SIGNALS
PUMP INVERTERS

Customer

Drawing No. D58175

Order No.

Page: 95

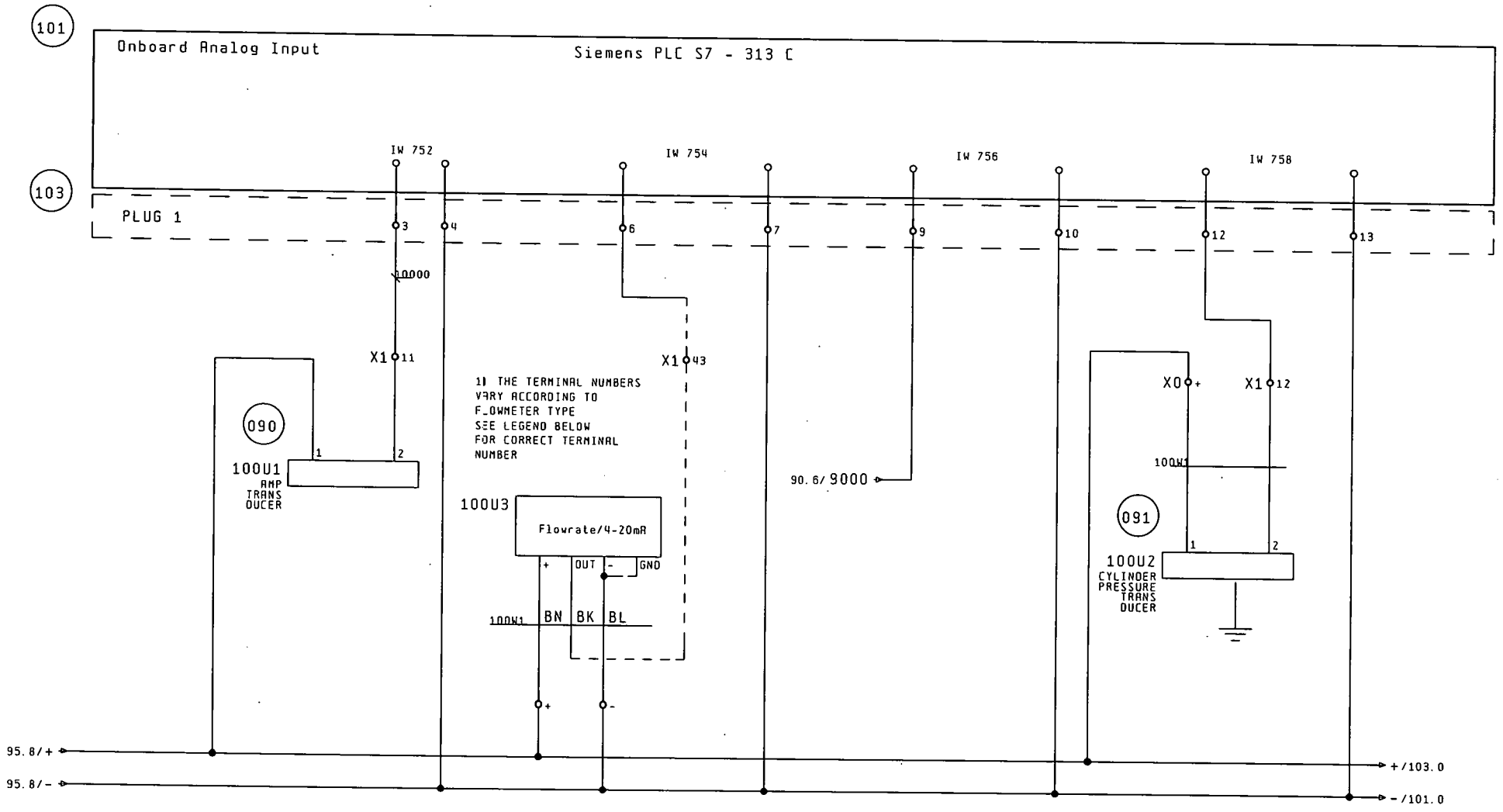

1) SIEMENS MAGFLO 5000:

+ = TERMINAL +
- = TERMINAL -
OUT = TERMINAL 31
GND = TERMINAL 32

ENDRESS & HAUSER:

+ = TERMINAL 1+
- = TERMINAL 1-
OUT = TERMINAL 26
GND = TERMINAL 27

THIS DRAWING MUST NOT BE COPIED OR DISCLOSED TO A THIRD PARTY WITHOUT OUR PERMISSION

DWG No. D58175

WCB

WCB ICE CREAM
GRAHAM BELLS VEJ 6
DK-8200 AARHUS N. DENMARK

Rev.	Const.	Date
A		
B		
C		
Made	JRO	24. Jan. 2007

ANALOG INPUTS IW 752 - IW 758

Customer

Drawing No. D58175

Order No.

Page: 100

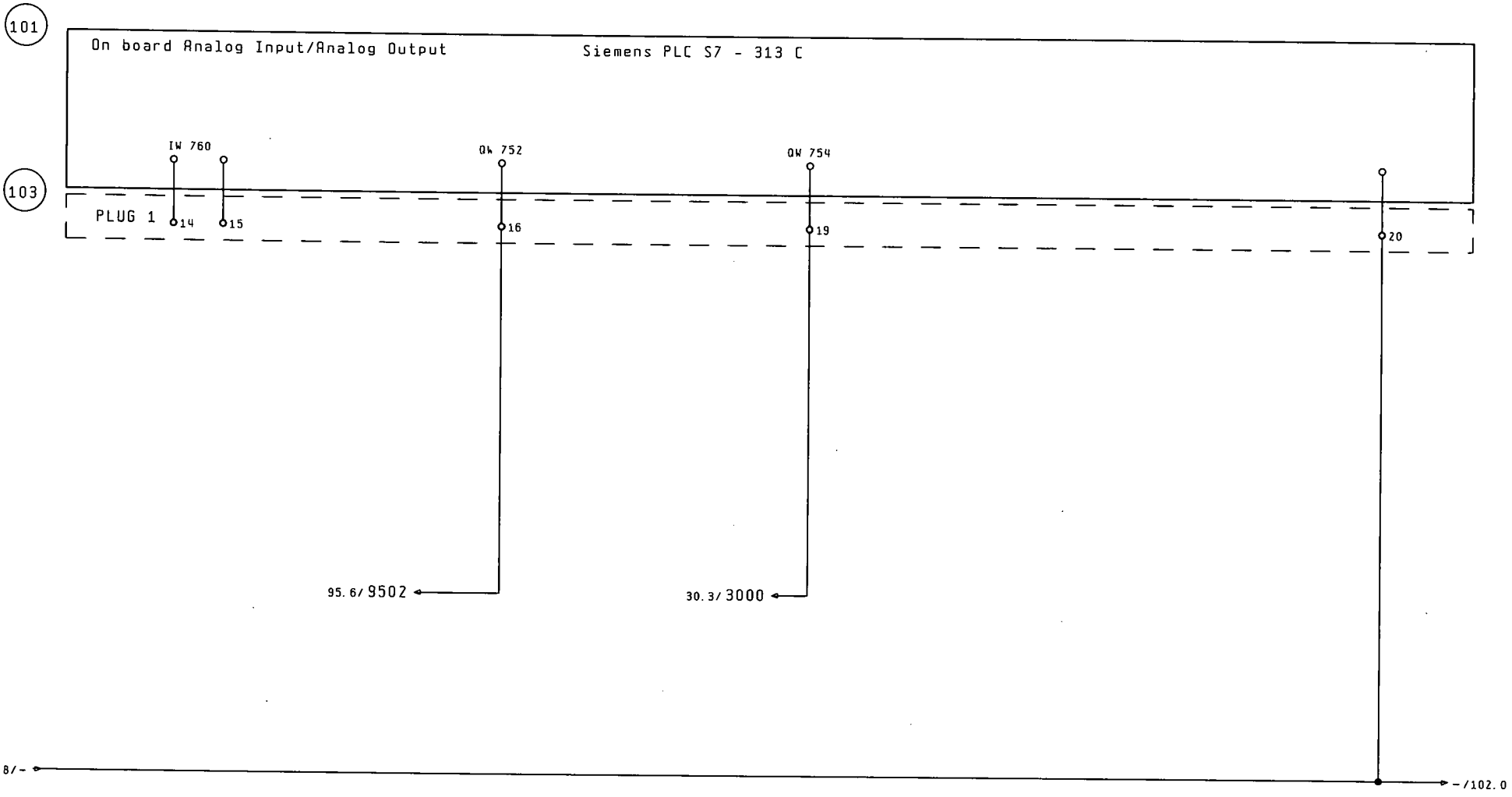

THIS DRAWING MUST NOT BE COPIED OR DISCLOSED TO A THIRD PARTY WITHOUT OUR PERMISSION

102

DWG No. D58175

WCB

WCB ICE CREAM
GRAHAM BELLS VEJ 6
DK-8200 AARHUS N, DENMARK

Rev	Const.	Date
A		
B		
C		
Made	JRO	26. Aug. 2005

ANALOG IN. IW 760
ANALOG OUT. QW 752 - 754

Customer

Drawing No. D58175

Order No.

Page: 101

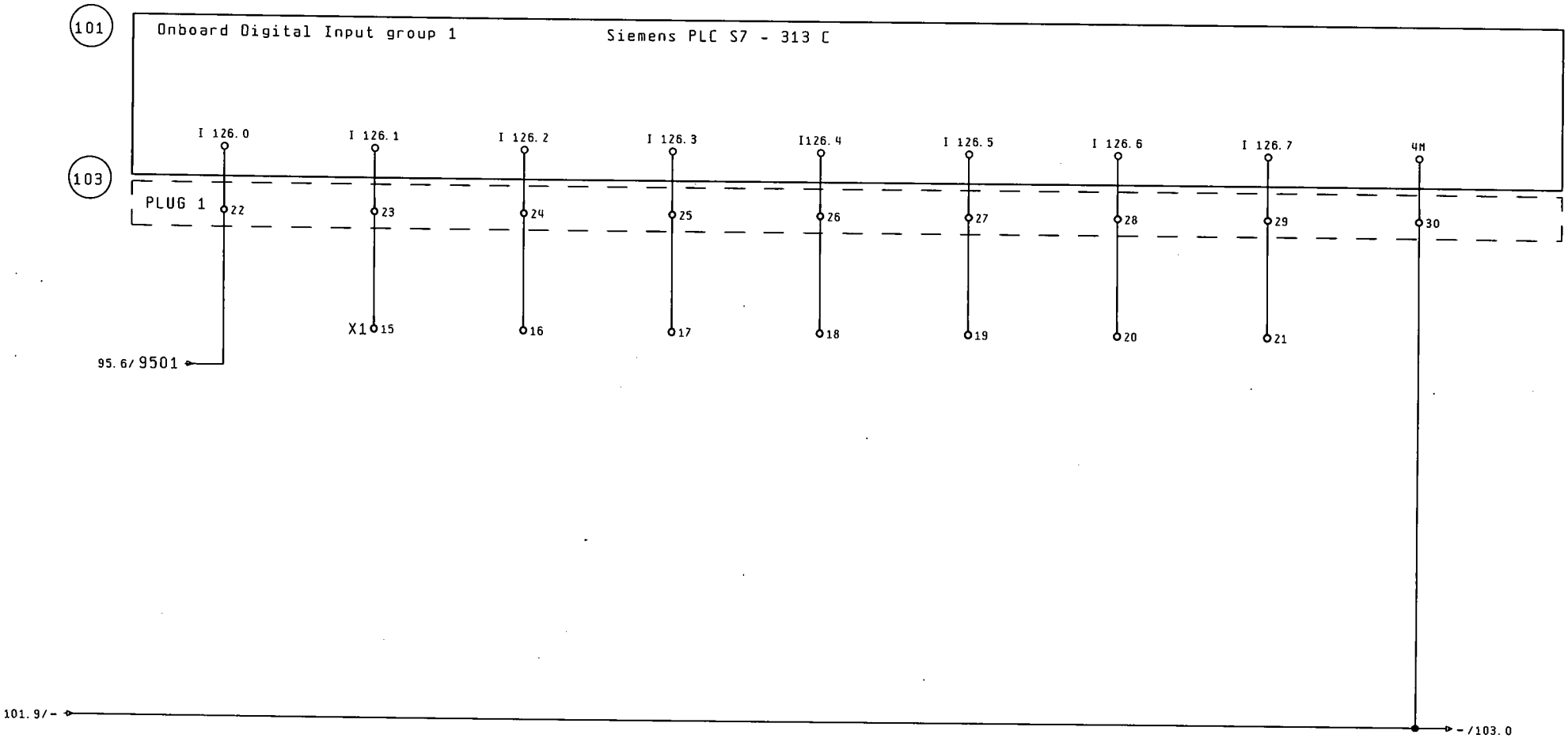

THIS DRAWING MUST NOT BE COPIED OR DISCLOSED TO A THIRD PARTY WITHOUT OUR PERMISSION

DWG No. D58175

WCB

WCB ICE CREAM
GRAHAM BELLS VEJ 6
DK-8200 AARHUS N, DENMARK

Rev.	Const.	Date
A		
B		
C		
Made	JRO	19. Sep. 2005

DIGITAL INPUTS
I 126.0 - I 126.7

Customer

Drawing No. D58175

Order No.

Page: 102

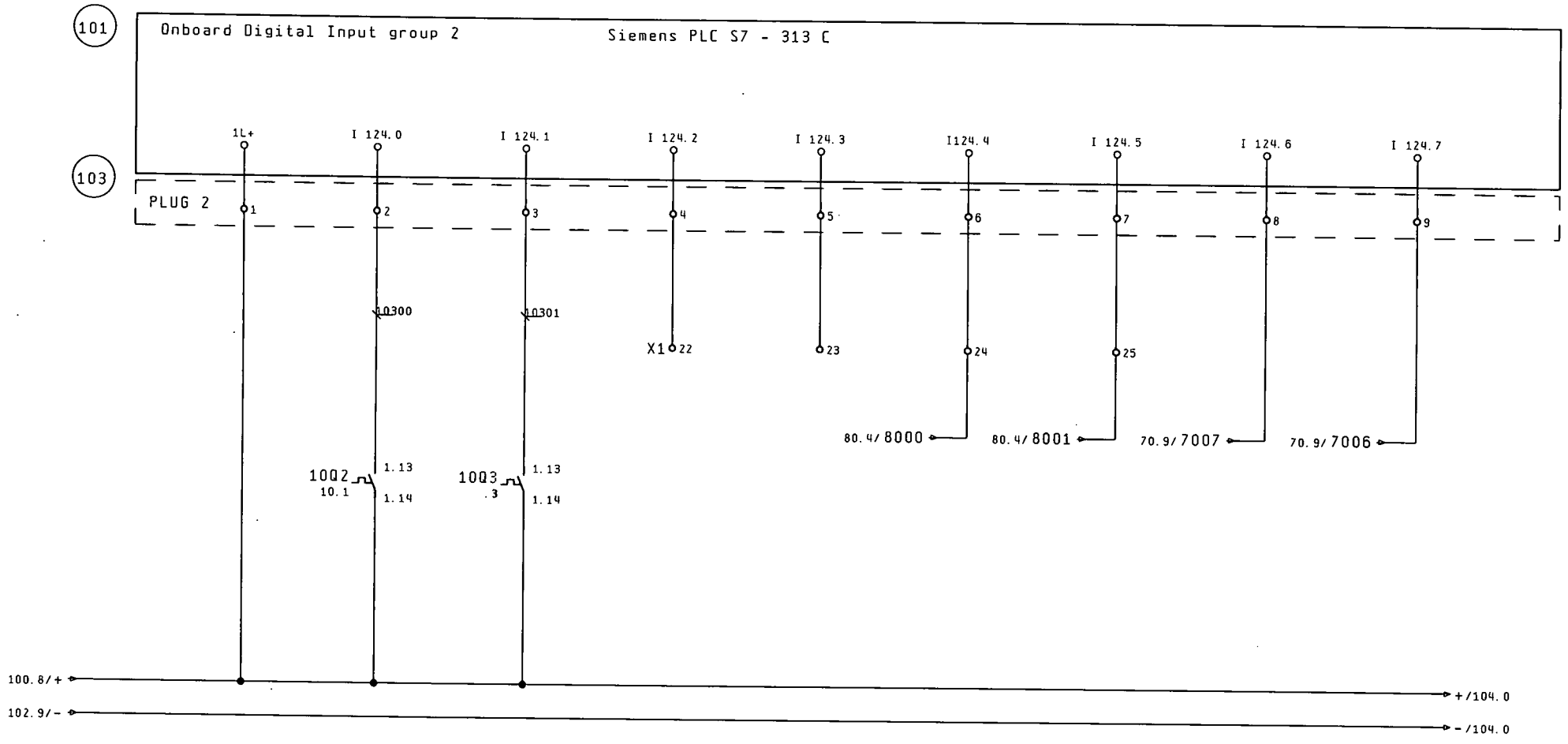

1) NOT NH3 MACHINES,
INSTEAD WIRE INPUT TO +

THIS DRAWING MUST NOT BE COPIED OR DISCLOSED TO A THIRD PARTY WITHOUT OUR PERMISSION

DWG No. D58175

WCB

WCB ICE CREAM
GRAHAM BELLS VEJ 6
DK-8200 AARHUS N, DENMARK

Rev.	Const.	Date
A		
B		
C		
Made	JRO	19. Sep. 2005

DIGITAL INPUTS
I 124.0 - I 124.7

Customer

Drawing No. D58175

Order No.

Page: 103

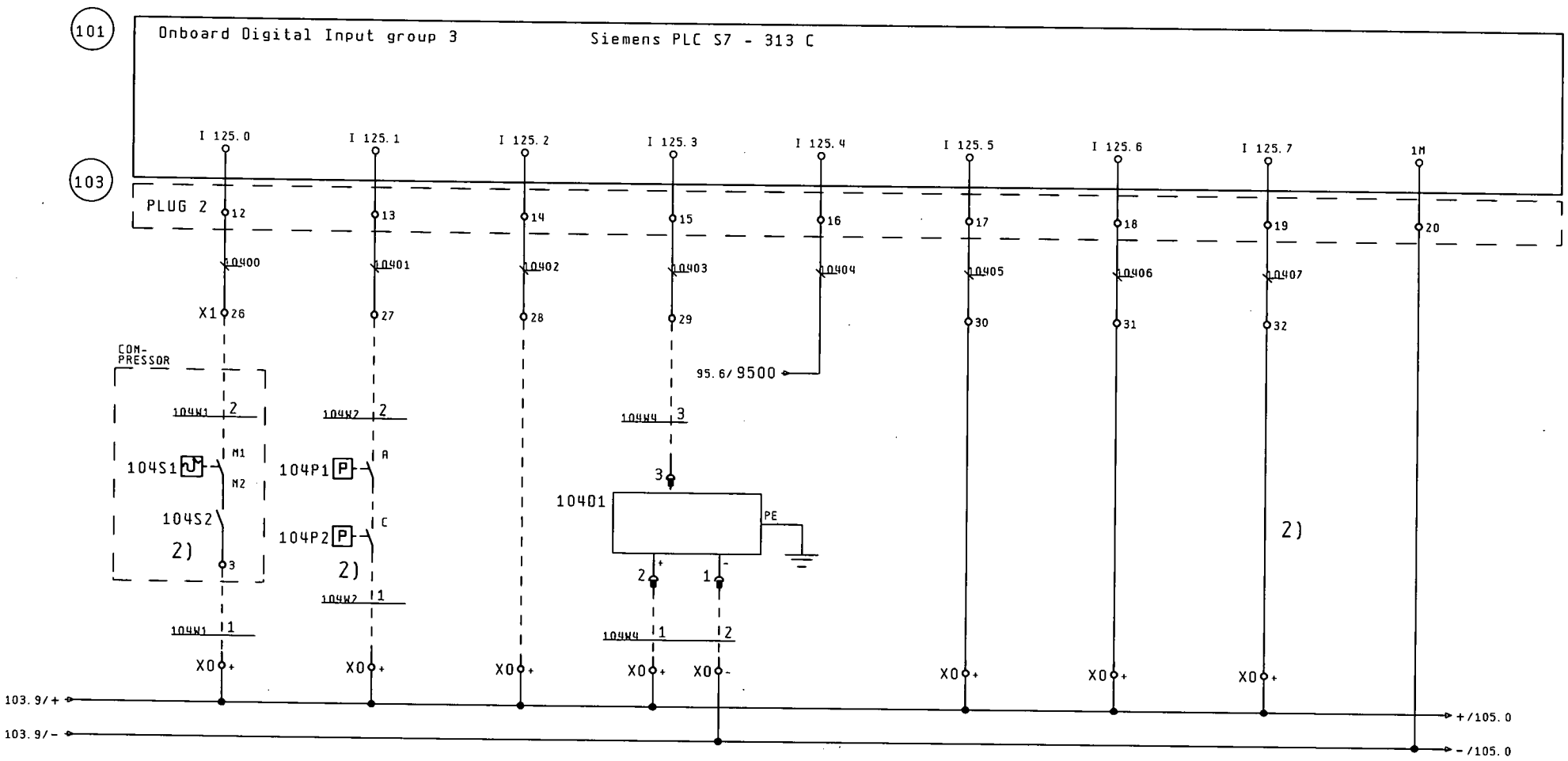

THERMOSWITCH IN COMPRESSOR 1)	HIGH PRESSURE SWITCH 1)	LOW PRESSURE SWITCH 3)	LIQUID LEVEL SENSOR (NH3 MACHINES ONLY)	MIX PUMP DRIVE HEALTHY	EMERGENCY PUMP DOWN	SANITIZE ACKNOWLEDGE	CIP ACKNOWLEDGE

2) REMOVE JUMPER AND REPLACE WITH SWITCH OR OPTOCOUPLER

1) NOT NH3 MACHINES, INSTEAD WIRE INPUTS TO +

2) COPELAND COMPRESSORS ONLY

3) LOW PRESSURE SWITCH BITZER COMPRESSOR ONLY (CONNECT 104P2)

THIS DRAWING MUST NOT BE COPIED OR DISCLOSED TO A THIRD PARTY WITHOUT OUR PERMISSION

DWG No. D58175

WCB

WCB ICE CREAM
GRAHAM BELLS VEJ 6
DK-8200 AARHUS N. DENMARK

Rev.	Const.	Date
A		
B		
C		
Made	JRO	19. Sep. 2005

DIGITAL INPUTS
I 125.0 - I 125.7

Customer

Drawing No. D58175

Order No.

Page: 104

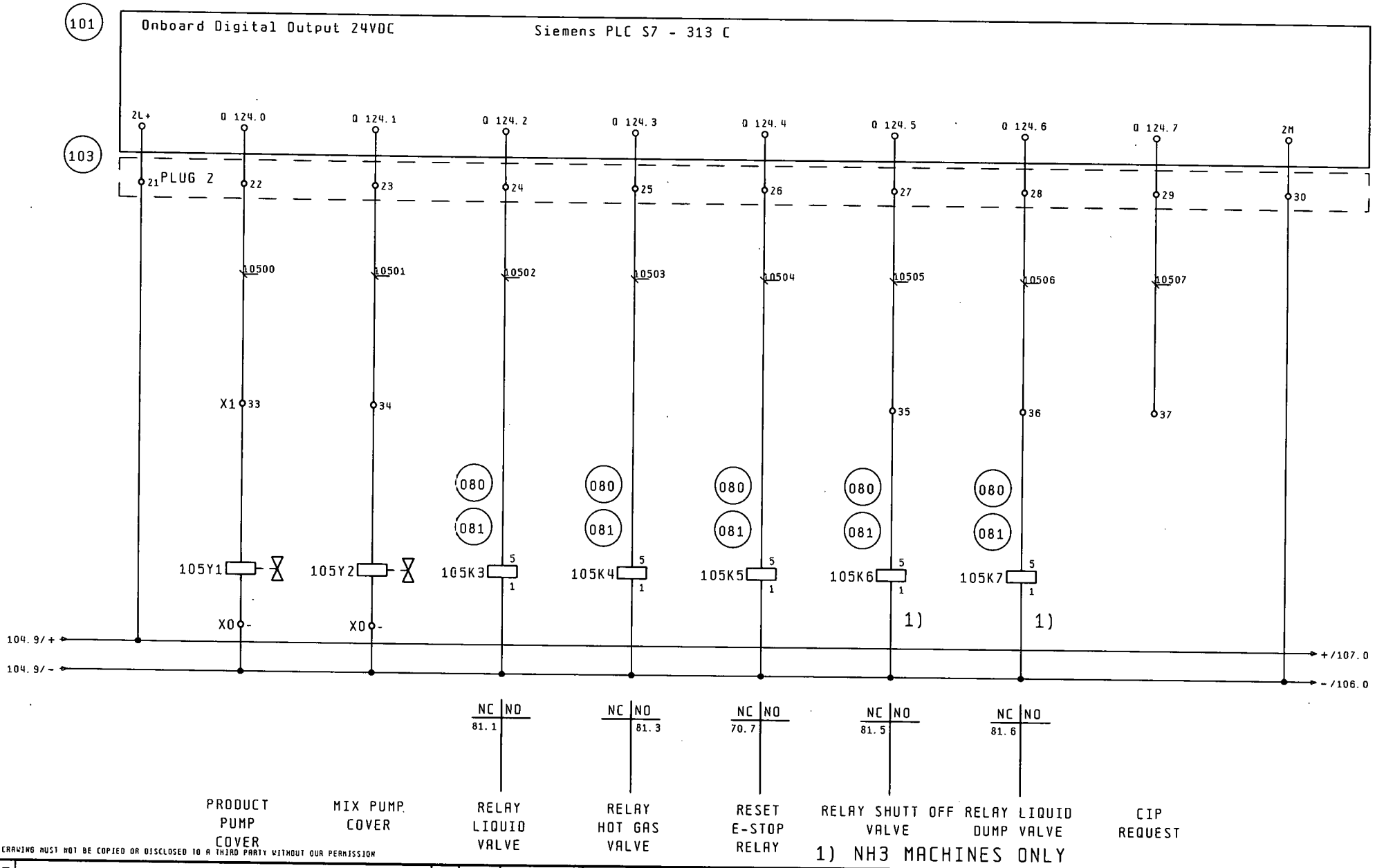

THIS DRAWING MUST NOT BE COPIED OR DISCLOSED TO A THIRD PARTY WITHOUT OUR PERMISSION

106

DWG No. D58175

WCB

WCB ICE CREAM
GRAHAM BELLS VEJ 6
DK-8200 AARHUS N. DENMARK

Rev	Const.	Date
A		
B		
C		
Made	JRO	28. Nov. 2005

DIGITAL OUTPUTS Q 124.0 - Q 124.7

Customer

Drawing No. D58175

Order No.

Page: 105

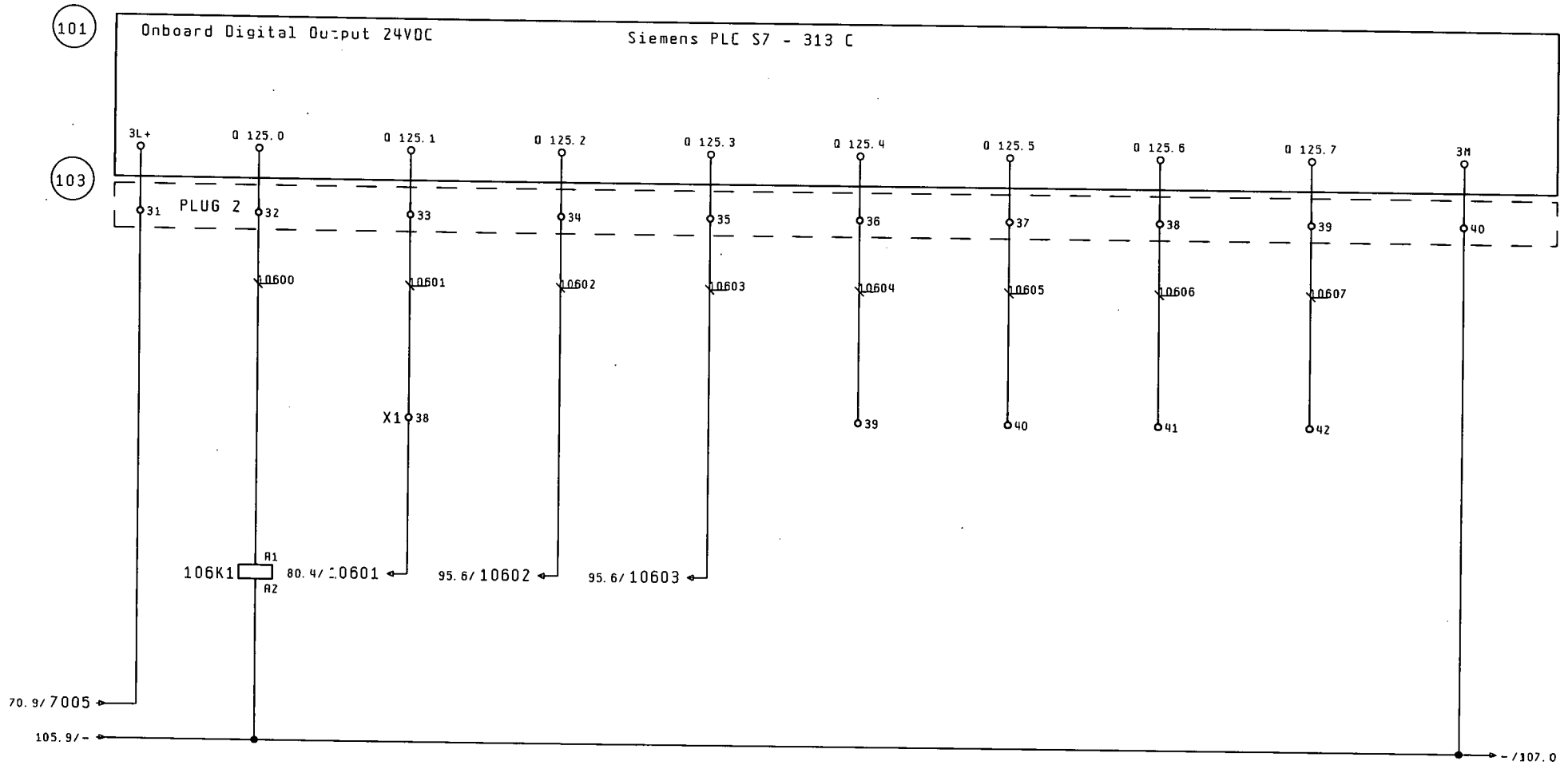

NC	NO
10.1	84.2
10.1	85.2
10.1	84.2
84.2	85.2
85.2	84.2
84.2	
85.2	

COMPRESSOR CONTACTOR NOT NH3 MACHINES	DASHER START SIGNAL	MIX PUMP START SIGNAL	PRODUCT PUMP START SIGNAL	AVAILABLE	AVAILABLE	AVAILABLE	AVAILABLE

THIS DRAWING MUST NOT BE COPIED OR DISCLOSED TO A THIRD PARTY WITHOUT OUR PERMISSION

DWG No. D58175

WCB

WCB ICE CREAM
GRAHAM BELLS VEJ 6
DK-8200 AARHUS N, DENMARK

Rev.	Const.	Date
A		
B		
C		
Made	JRD	19. Sep. 2005

DIGITAL OUTPUTS Q 125.0 - Q 125.7

Customer

Drawing No. D58175

Order No.

Page: 106

106 10700

Analog Input

Siemens PLC S7-300

*** CODEBLOCK IN POSITION A ***

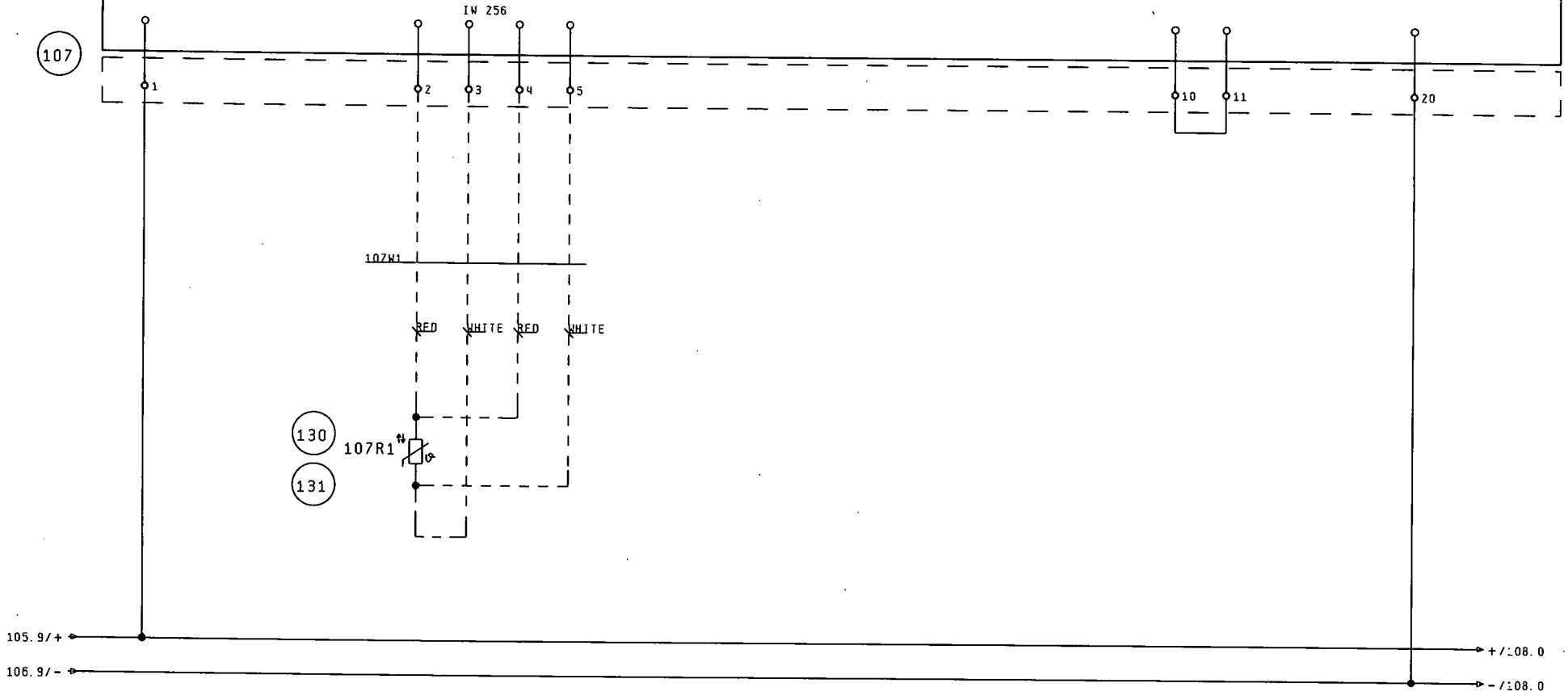

PRODUCT
TEMPERATURE
MEASUREMENT

THIS DRAWING MUST NOT BE COPIED OR DISCLOSED TO A THIRD PARTY WITHOUT OUR PERMISSION

DWG No. D58175

WCB

WCB ICE CREAM
GRAHAM BELLS VEJ 6
DK-8200 AARHUS N, DENMARK

Rev.	Const.	Date
A		
B		
C		
Made	JRO	25. Aug. 2005

ANALOG INPUT IW 256
PRODUCT TEMPERATURE

Customer

Drawing No. D58175

Order No.

-
+
Page: 107

0 1 2 3 4 5 6 7 8 9

10800

Analog Output Siemens PLC S7 - 300

108
107

L+ QW 324 QW 326 M

1 3 6 7 10 20

X1 14

90.6/ 10800

95.6/ 9503

107.9/+

107.9/-

AIRFLOW SETPOINT SIGNAL

PRODUCT PUMP SPEED REFERENCE

THIS DRAWING MUST NOT BE COPIED OR DISCLOSED TO A THIRD PARTY WITHOUT OUR PERMISSION

200

DWG No. D58175

WCB

WCB ICE CREAM
GRAHAM BELLS VEJ 6
DK-8200 AARHUS N, DENMARK

Rev.	Const.	Date
A		
B		
C		
Made	JRO	19. Sep. 2005

ANALOG OUTPUTS QW 324 - QW 326

Customer

Drawing No. D58175

Order No.

Page: 108

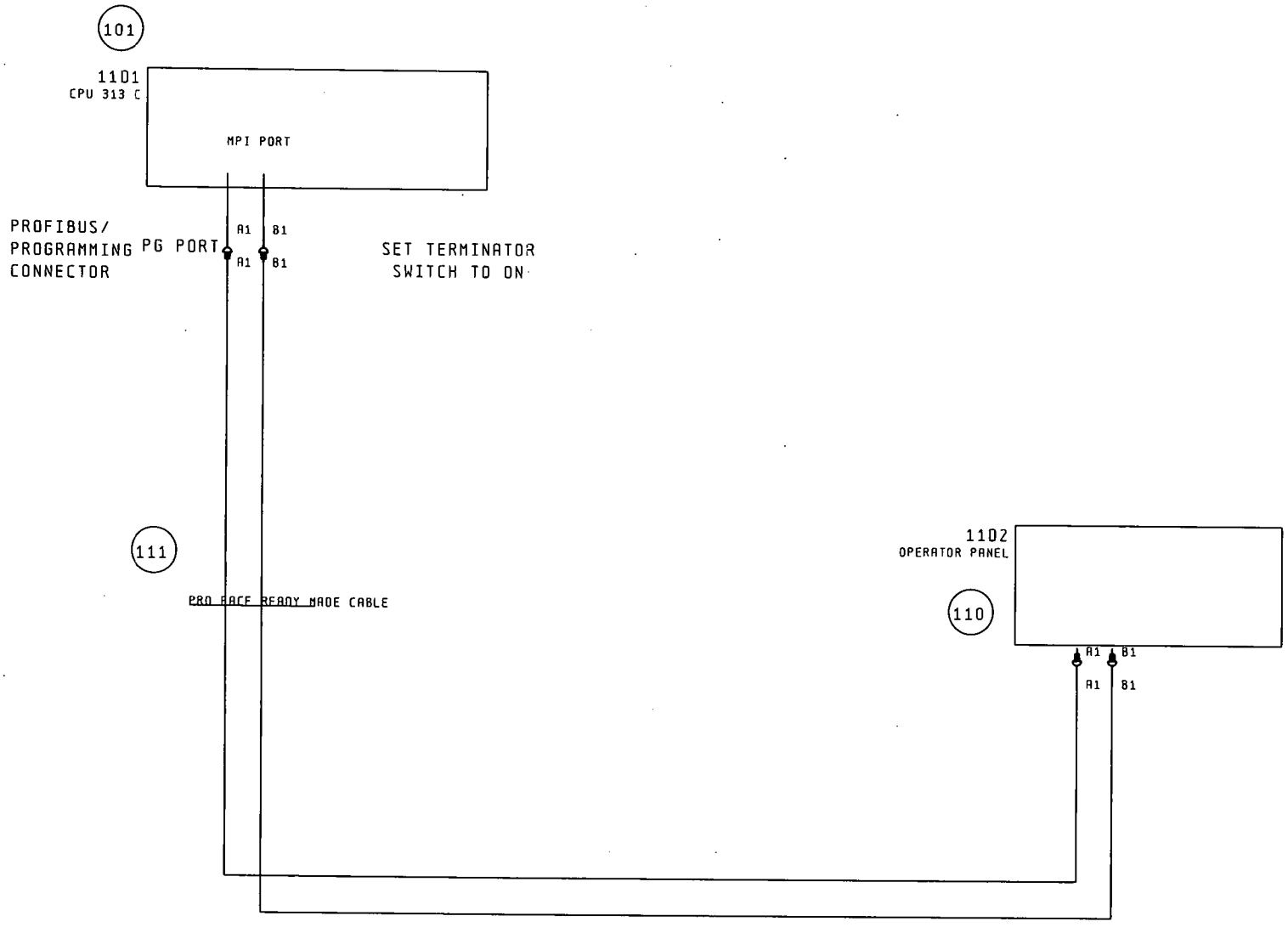

THIS DRAWING MUST NOT BE COPIED OR DISCLOSED TO A THIRD PARTY WITHOUT OUR PERMISSION

DWG No. D58175

WCB

WCB ICE CREAM
GRAHAM BELLS VEJ 6
DK-8200 AARHUS N, DENMARK

Rev.	Const.	Date
A		
B		
C		
Made	MIJ	27. Maj. 2005

SERIAL COMMUNICATIONS
SIEMENS <> OPERATOR PANEL

Customer

Drawing No. D58175

Order No.

Page: 200

General information: Ordering spare parts.

Drawings and Pos. no. lists:	**Description**
C T64916	MF600GA Freezer no.698, complete
D T64907	Machine sign, MF600 GA no. 698
C T53029	Frame for Freezer
C T62761	Pump system, 2 x CP#0 with CIP
A T60224	Pump and gear assembly
C T60504	Freezing cylinder and Dasher
C T53041	Drive system
C T63666	Refrigeration system components
C T59550	Air system components
D T57391	Piping for mix
D T57390	Piping for cream
D 58175	Electrical parts list, MF x00 GA
D 61582	Electrical parts list
D 61909	Electrical parts list, Motor starter

Spare parts

When replacing parts on your machine WCB Ice Cream recommend using only **Original replacement parts** specified by WCB Ice Cream.

The drawings and spare parts lists in this manual show the proper placement and list all spare parts.

When you order spare parts

When ordering spare parts for your machine, please always state:
Machine type and serial number, and if possible drawing number, position number and part number.

WCB Ice Cream
An Alliance Company

Graham Bells Vej 6

DK - 8200 Aarhus N

Denmark

Telephone: + 45 87 41 20 00

Telex: + 45 87 41 20 01

WCB Ice Cream

SPARE PARTS LIST Date 09/05-07 10:03 Page 1

T64916 MF 600GA Freezer no. 698

PART NO.	POS.	DESCRIPTION	NUMBER
T63659	1	Basic machine	1
T62761	2	Pump system CP#0 Cream + CP#0 Mix	1
T57390	4	Piping for Ice cream	1
T57391	5	Piping for Mix	1
T59550	6	Air system	1
T64907	7	Machine sign	1
T64910	8	Sign, Evaporator	1
T58175	9	Elec. parts list, MFx00 GA, ver 3.0	1
T59088	501	Spares kit MF600	0

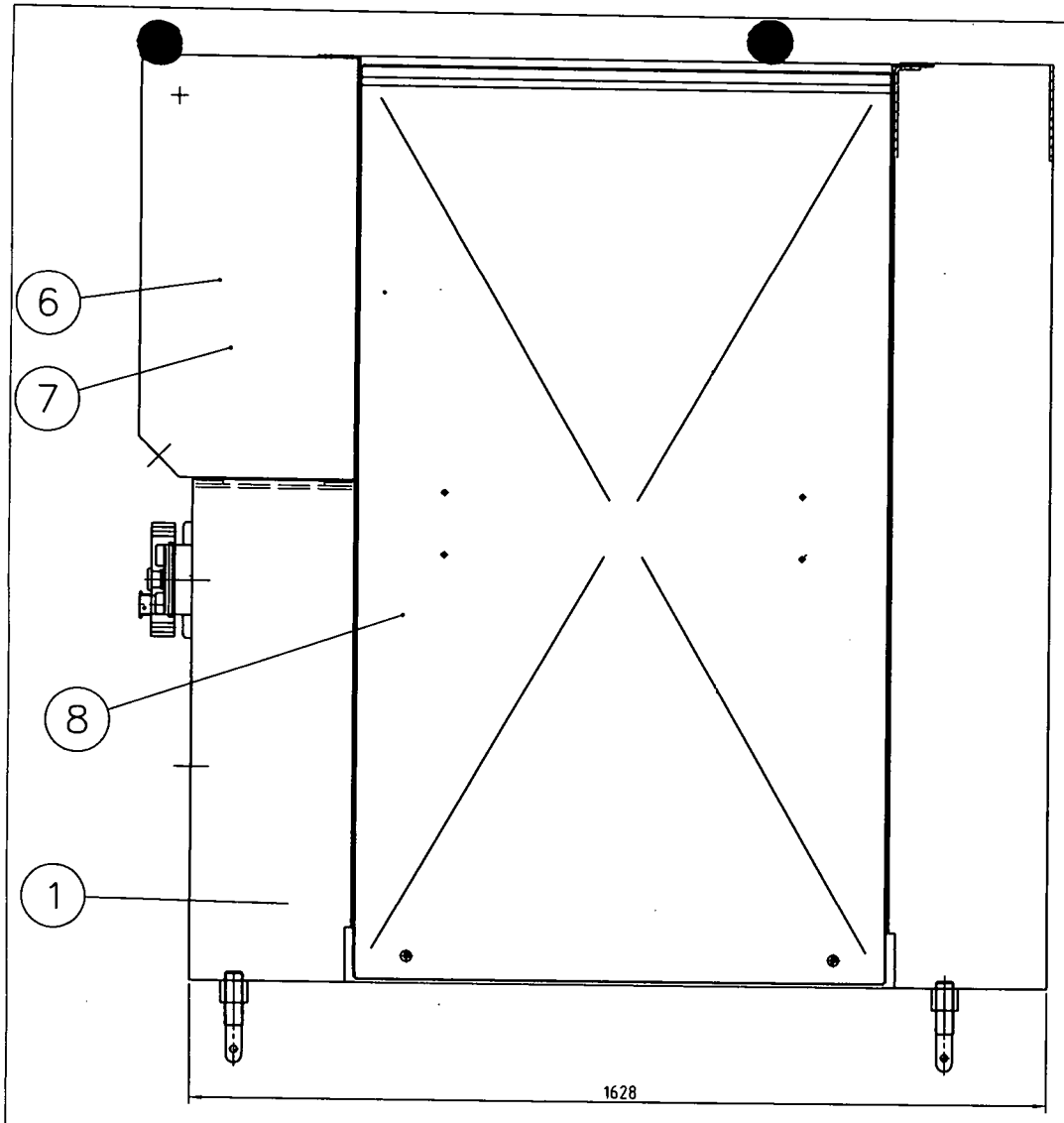

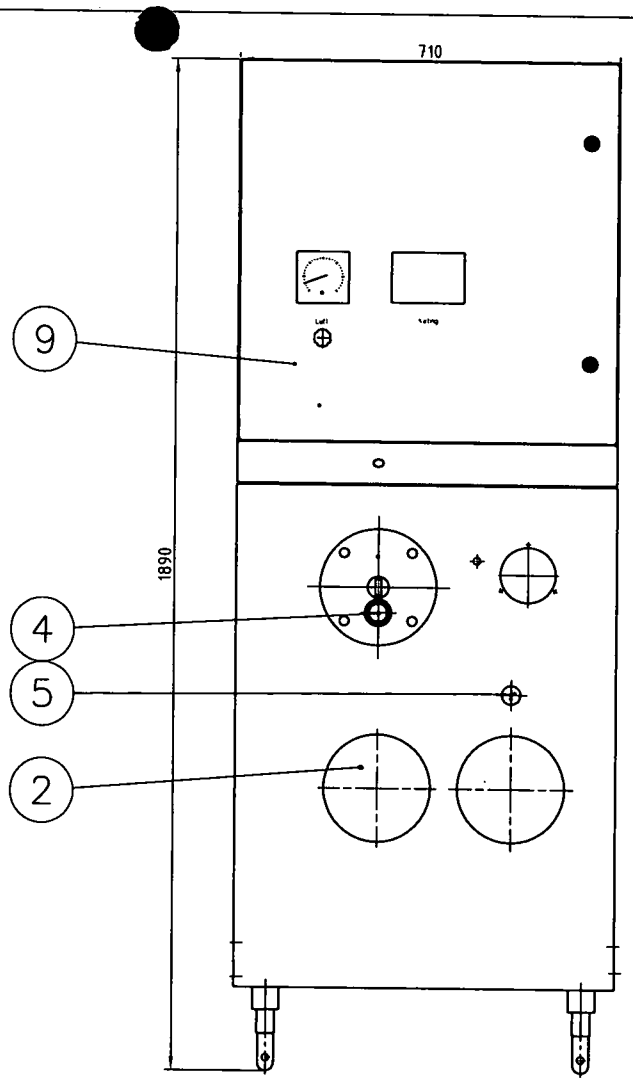

501

WCB Ice Cream

An Alliance Company

MF- fryser

MF600GA No.698 On. 407323

No. off:		Drawn by:	ESC
BOM:		Date:	05-02-2007
Machine:		Approved by:	
		Material:	
		Maskintype:	MF 600
Drawing Size	A3	Old drawing No.:	
Scale:	1:10	Drawing No.:	C T64916

Tolerance according to DIN ISO 2768-m if nothing else is specified.

Do not copy or distribute to third party without approval by WCB Ice Cream A/S, Graham Bells Vej 6, DK-8200 Århus N

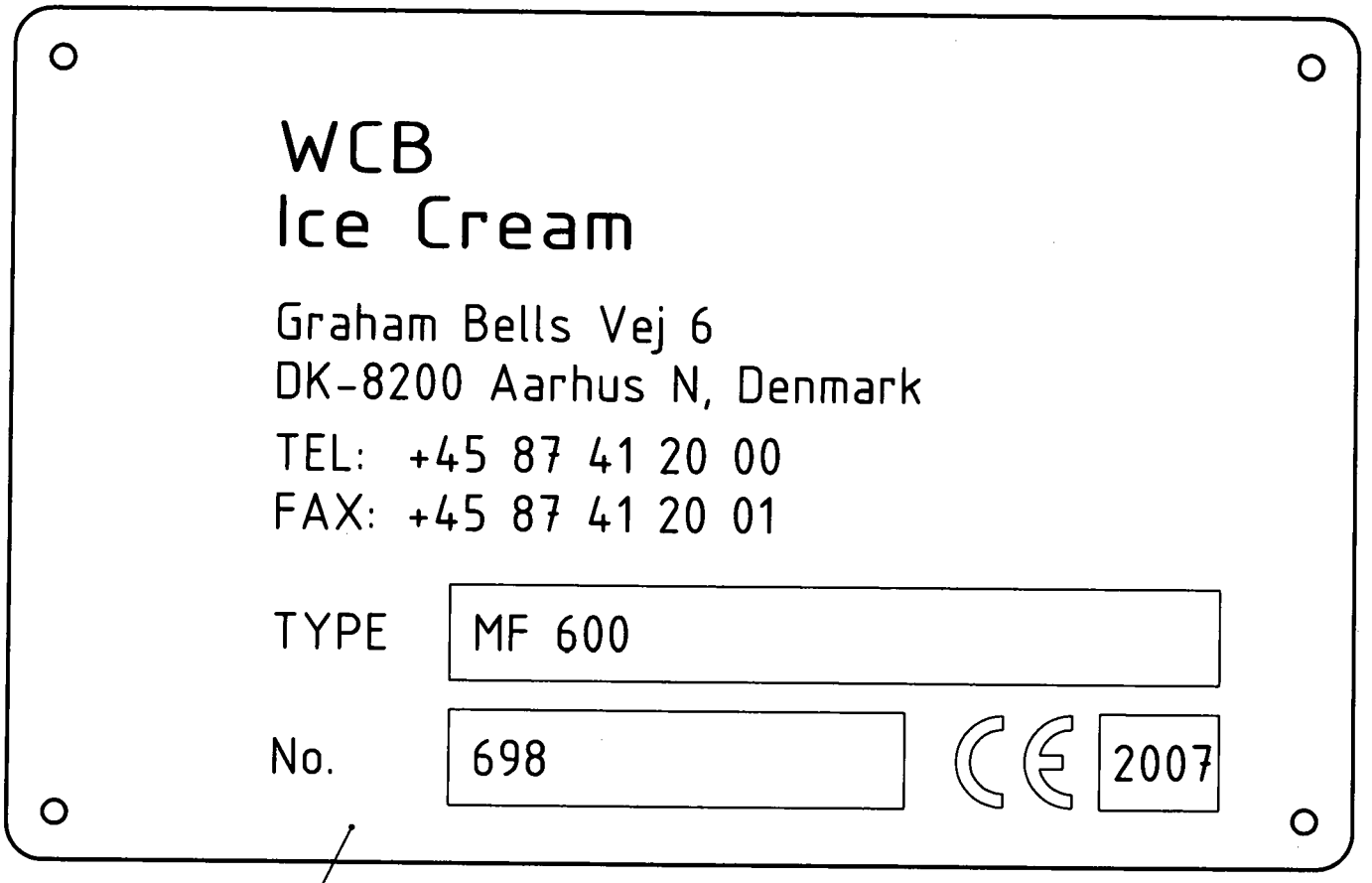

1

TYPE, No. og årstal graveres af Thurm

WCB Ice Cream

An Alliance Company

Maskinskilt

MF 600 No. 698

No. off:		Drawn by:	ESC
BOM:		Date:	05-02-2007
Machine:		Approved by:	
		Material:	AISI 304
		Maskintype:	MF 600
Drawing Size	A4	Old drawing No.:	

Scale: 1:1	Drawing No.: D T64907

Tolerance according to DIN ISO 2768-m if nothing else is specified.

Do not copy or distribute to third party without approval by WCB Ice Cream A/S, Graham Bells Vej 6, DK-8200 Århus N

T53029 Frame

PART NO.	POS.	DESCRIPTION	NUMBER
T52848	3	Frame, front	1
T52885	4	Bracket, bottom	1
T20922	6	Leg	4
T52968	7	Door for frame	2
T52996	8	Frame, rear end	1
T61014	9	Cover, rear end	1
T52993	10	Rail for door	2
T57376	501	Bracket	1
T1003653	503	Handle	4
T58332	506	Lattice tray	1
T58331	507	Lattice tray	2
T2003024	508	Suspension clamp	4
T2003025	509	Suspension clamp	2
T57905	510	Mounting plate for elec. tray	1
T57252	511	Bracket	1

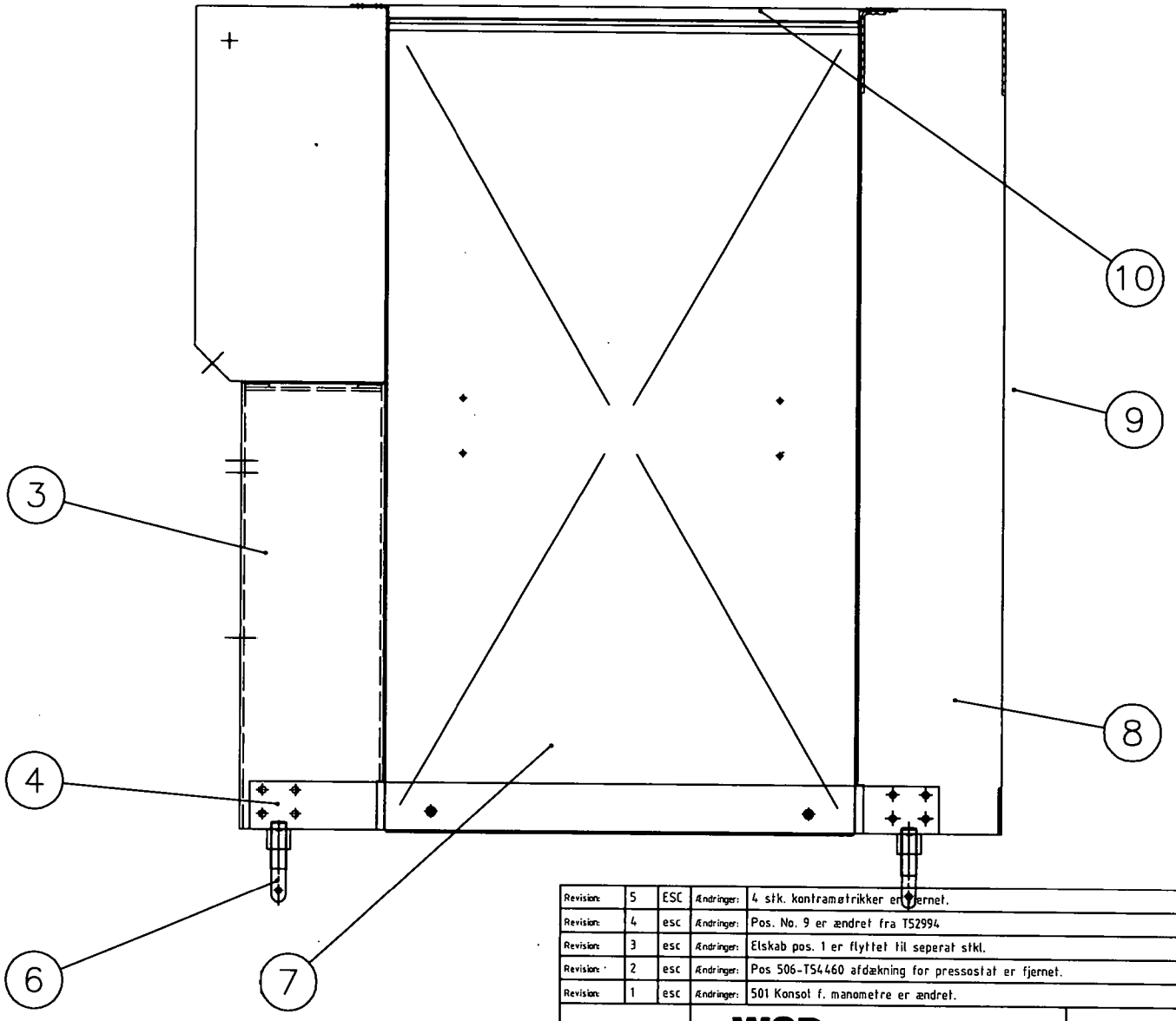

511					
510					
509					
508					
507					
506					
505					
503					
501					

Revision:	5	ESC	Ændringer:	4 stk. kontramøtrikker er fjernet.	Revisionsdato: 23.05.06
Revision:	4	esc	Ændringer:	Pos. No. 9 er ændret fra T52994	Revisionsdato: 14.02.06
Revision:	3	esc	Ændringer:	Elskab pos. 1 er flyttet til seperat stkl.	Revisionsdato: 10.10.05
Revision:	2	esc	Ændringer:	Pos 506-T54460 afdækning for pressostat er fjernet.	Revisionsdato: 06.01.05
Revision:	1	esc	Ændringer:	501 Konsol f. manometre er ændret.	Revisionsdato: 09.12.04

WCB Ice Cream

An Alliance Company

No. off:		Drawn by:	Esc
BOM:		Date:	26-01-2004
Machine:		Approved by:	
		Material:	
		Maskintype:	MF 600
Drawing Size	A3	Old drawing No.:	

Stativ

Standard maskine

Scale: 1:10

Drawing No.: C T53029

Tolerance according to DIN ISO 2768-m if nothing else is specified.

Do not copy or distribute to third party without approval by WCB Ice Cream A/S, Graham Bells Vej 6, DK-8200 Århus N

WCB Ice Cream

T62761 Pump system CP#0 Cream + CP#0 Mix

PART NO.	POS.	DESCRIPTION	NUMBER
T54006	1	Pump assembly - CP0	2
T52878	2	Front plate for pumps	1
03SS475256	3	Rotor fin	4
T1008472	4	Worm gear motor, BJ	2
T61991	5	Washer for BJ gear	2

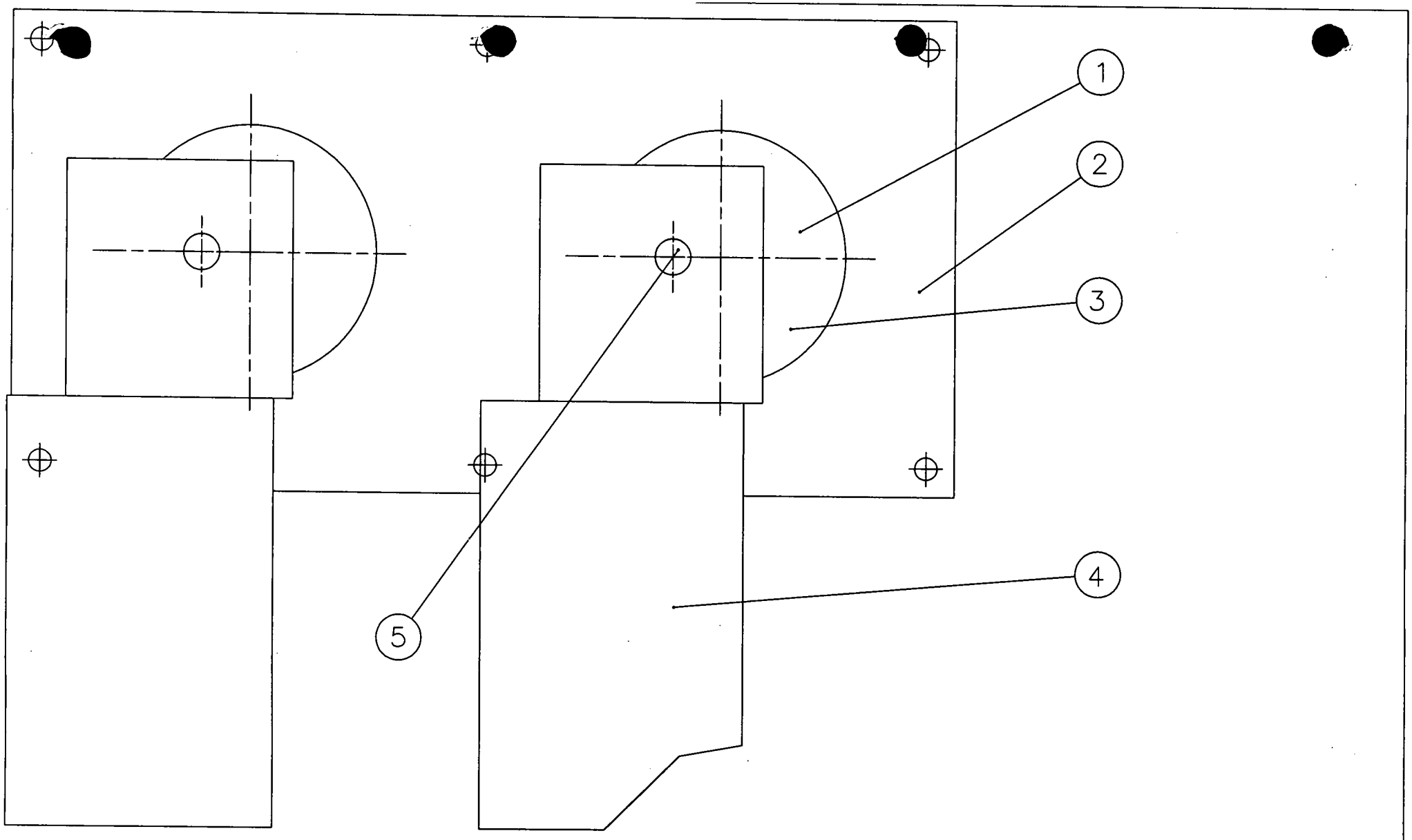

WCB Ice Cream

An Alliance Company

Pumpesystem

CP#0 Creme + CP#0 Mix 0,75 kW 50Hz

No. off:		Drawn by:	ESC
BOM:		Date:	18-10-2006
Machine:		Approved by:	
		Material:	
		Maskintype:	MF 600
Drawing Size	A3	Old drawing No.:	T58147
Scale:	1:2	Drawing No.:	C T62761

Tolerance according to DIN ISO 2768-m if nothing else is specified.

Do not copy or distribute to third party without approval by WCB Ice Cream A/S, Graham Bells Vej 6, DK-8200 Århus N

T60224 Pump system - CP#0

PART NO.	POS.	DESCRIPTION	NUMBER
T1008300	1	Shaft, long	1
T1008303	2	Threaded plug	1
T1008294	3	O-ring	2
T1008307	4	Conical roller bearing	4
T1008296	5	Set screw	4
T1008304	6	Threaded plug	1
T1008299	7	Stop screw, M6	2
T1008298	8	Gasket	1
T1008301	9	Shaft	1
T1008310	10	Gear box	1
T1008306	11	Bottom plug	4
T1008308	12	Oil seal ring	3
T1008309	13	Pin	2
T1002015	14	O-ring	2
03HP475256	15	Rotor fin	2
T54043	16	Pump housing	1
T54044	17	Cover	1
T54138	18	Bushing spacer	2
T54051	19	Piston	1
543SK361AL	20	Seal	1
T54047	21	Cylinder housing	1
T1002013	22	O-ring	1
T54048	23	Cover plate	1
T1008302	24	Threaded rod, M10	4
T1001825	25	O-ring	1
T54103	26	Shaft	1
T54102	27	Arm for pump	2
T54139	28	Bushing spacer	1
T54046	29	Front plate	1
T1008024	30	O-ring	1
03HP331051	31	Seal	2
T1001825	32	O-ring	2
03HP331054	33	Seal	1
T54041	34	Rear plate	1
T1008305	35	Cover	1
T54104	36	Bushing	1
T1002283	37	Seeger circlip ring	2

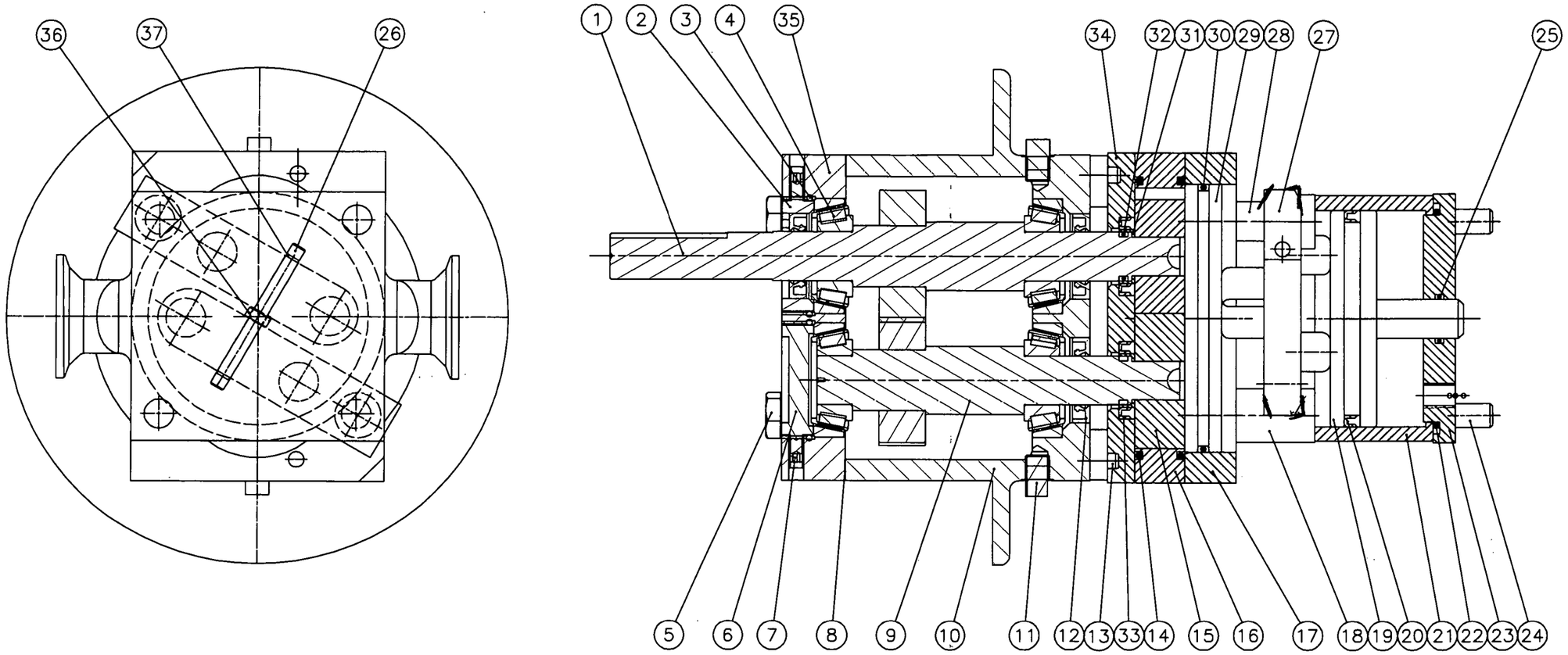

WCB Ice Cream An Alliance Company	No. of:	Drawn by	Esc
	BOM	Date	05-01-2008
	Machine	Approved by	
		Material	
		Machine type	MF 600
	Drawing Size A1	Old drawing No	T54008
Pumpesystem CP 0 m. Iso Clamp (Gl. nr. T1007610)	Scale 1:1	Drawing No A T60224	
	Tolerance according to DIN ISO 2768-m if nothing else is specified.		

Do not copy or distribute to third party without approval by WCB Ice Cream A/S, Graham Bells Vej 6, DK-8200 Århus N

WCB Ice Cream

SPARE PARTS LIST Date 08/05-07 17:08 Page 1

T60504 Freezing cylinder and Dasher

PART NO.	POS.	DESCRIPTION	NUMBER
T1001895	1	O-ring	1
T53943	2	Front cover	1
T1002178	3	O-ring	1
T10278	4	Front bearing	1
T52956	5	Freezing cylinder	1
T1008574	6	O-ring	1
T1007575	7	O-ring	1
T1007574	8	O-ring	1
T52957	9	Evaporator	1
T55576	10	Beater	1
T1007574	11	O-ring	1
T1007575	12	O-ring	1
T52952	13	Flange ring	1
T1002178	14	O-ring	1
T54014	15	Rear cover	1
T60436	16	Shaft journal	1
T1004727	17	Shaft seal	1
T1001891	19	O-ring	1
T17378	20	Bearing	1
T1005208	21	O-ring	2
T53061	22	Scraper blade	2
T52963	23	Dasher	1
T53670	24	Screw for cover	8
T1003244	25	Washer	4
T56440	41	T-piece - Mix/air	1
T1000459	42	Bolt	1

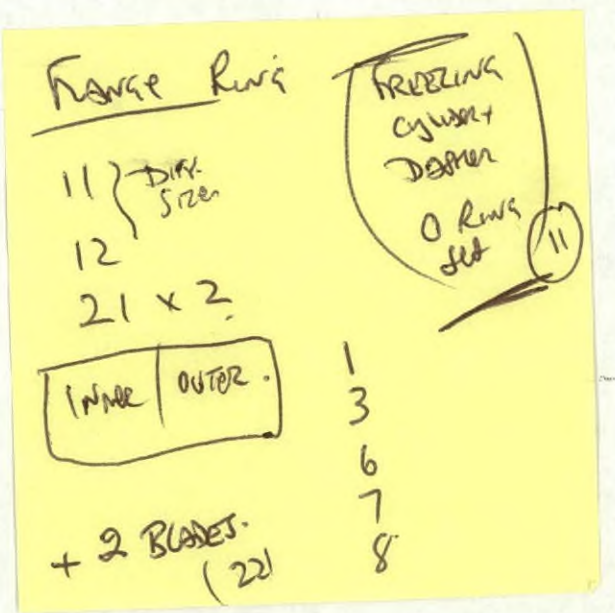

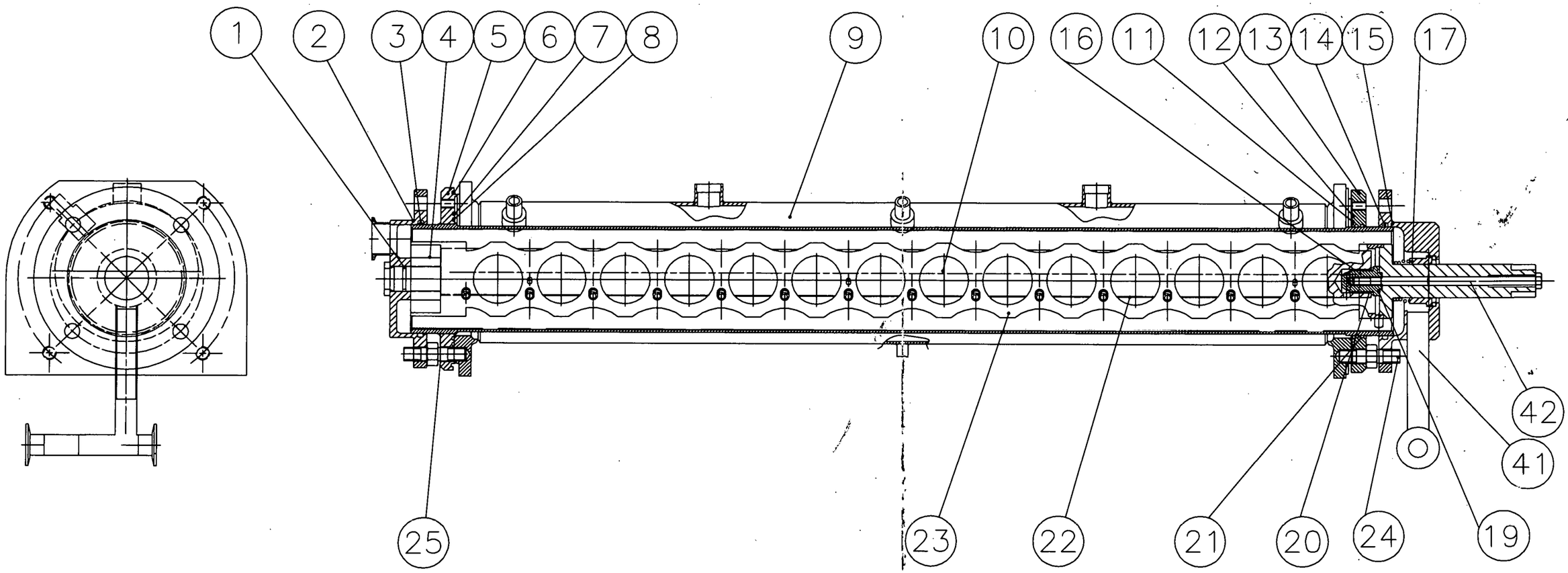

Revision:	1	hla	Ændringer:	Pos 24 tilføjet pos 15, pos 17 vist	Revisionsdato: 17.05.04

WCB Ice Cream

An Alliance Company

No. off:		Drawn by:	Esc
BOM:		Date:	18-01-2006
Machine:		Approved by:	
		Material:	
		Maskintype:	MF 600
Drawing Size	A3	Old drawing No.:	T53944

Cylinder

Frysecylinder - Dasher med nyt bagdæksel

Scale: 1:5

Drawing No.: C T60504

Tolerance according to DIN ISO 2768-m if nothing else is specified.

Do not copy or distribute to third party without approval by WCB Ice Cream A/S, Graham Bells Vej 6, DK-8200 Århus N

T53041 Drive system

PART NO.	POS.	DESCRIPTION	NUMBER
T1007432	1	Elec. motor	1
T1006530	2	Pulley	1
T1007612	3	V-belt	5
T52958	4	Cover for bearing	1
T1007611	5	Pulley	1
T1007581	6	Oil seal ring	1
T1002319	7	Seeger circlip ring	1
T52955	8	Shaft	1
T1007580	9	Ball bearing	1
T1007579	10	Ball bearing	1
T1007582	11	Oil seal ring	1
T52959	12	Bearing housing	1
T52964	13	Yoke	1
T52960	14	Bracket	1
T53689	15	Spacer for bearing	1

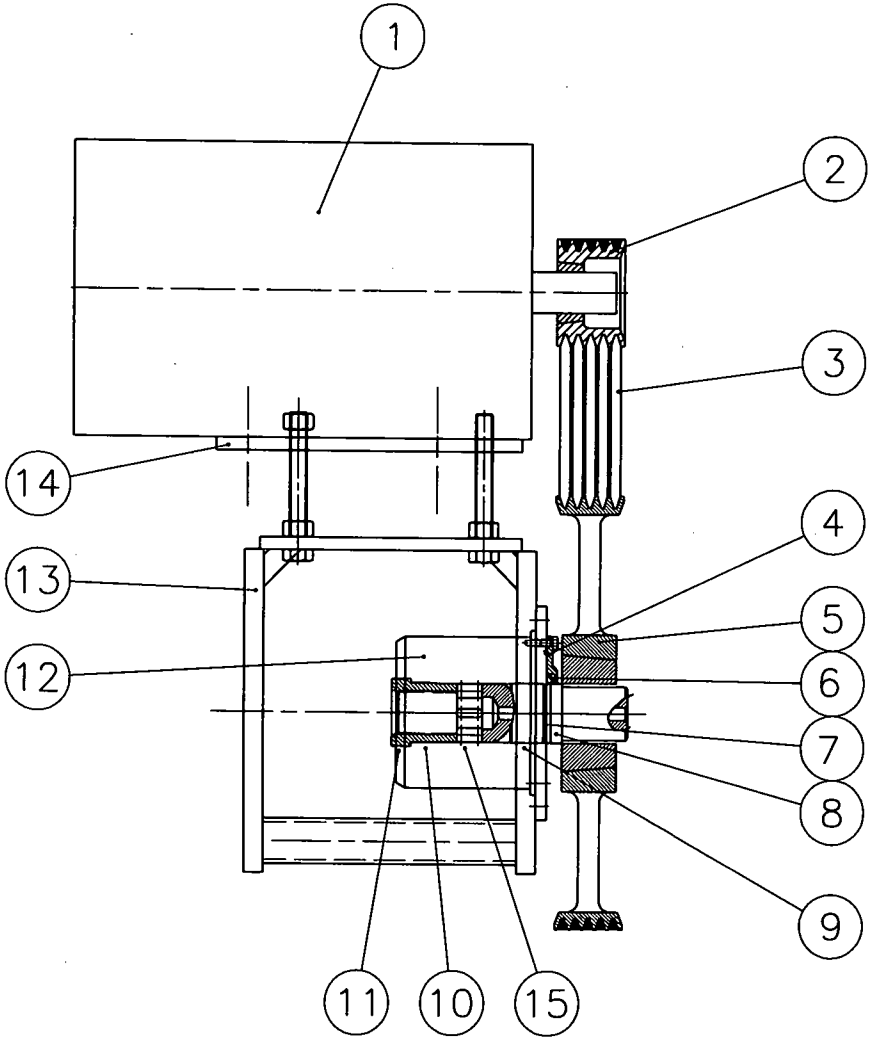

WCB Ice Cream

An Alliance Company

Træksystem

No. off:		Drawn by:	Esc
BOM:		Date:	27-01-2004
Machine:		Approved by:	
		Material:	
		Maskintype:	MF 600
Drawing Size	A3	Old drawing No.:	
Scale: 1:5		Drawing No.: C T53041	

Tolerance according to DIN ISO 2768-m if nothing else is specified.

Do not copy or distribute to third party without approval by WCB Ice Cream A/S, Graham Bells Vej 6, DK-8200 Århus N

T63666 Refrigeration diagram

PART NO.	POS.	DESCRIPTION	NUMBER
T1004916	1	Main valve PM 1-25	1
T1006544	2	Pilot valve	1
T1008514	4	Pressure gauge, -1 to +12 bar	1
T1008733	5	Valve housing for TE5	1
T1004260	6	Thermo element	1
T1004262	7	Nozzle	1
T1008039	8	Sight glass	1
T1008787	10	Solenoid valve, EVR 10	1
T1004266	12	Drying filter	1
T1004269	13	Suction accumulator	1
T1008002	15	Pressure switch, double	1
T1004249	16	Pressure gauge	1
T1004248	17	Pressure gauge	1
T1007970	20	Compressor	1
T1004267	22	Oil separator	1
T1004432	23	Sight glass	1
T1006546	24	Condenser	1
T1004265	25	Water valve	1
T1008821	27	Solenoid valve, EVR6	1
T1006545	29	Flange	1
T53551	30	Suspension for main valve	1
T1007657	32	Mountings for water valve	1
T1005089	40	Seal	1
T1008156	43	Capacity controller	1
T1008157	44	Liquid-gas mixer	1
T1008630	45	Ball valve	1
T1004431	501	Refrigerant R404A	10
T1005958	503	Oil for oil separator	0

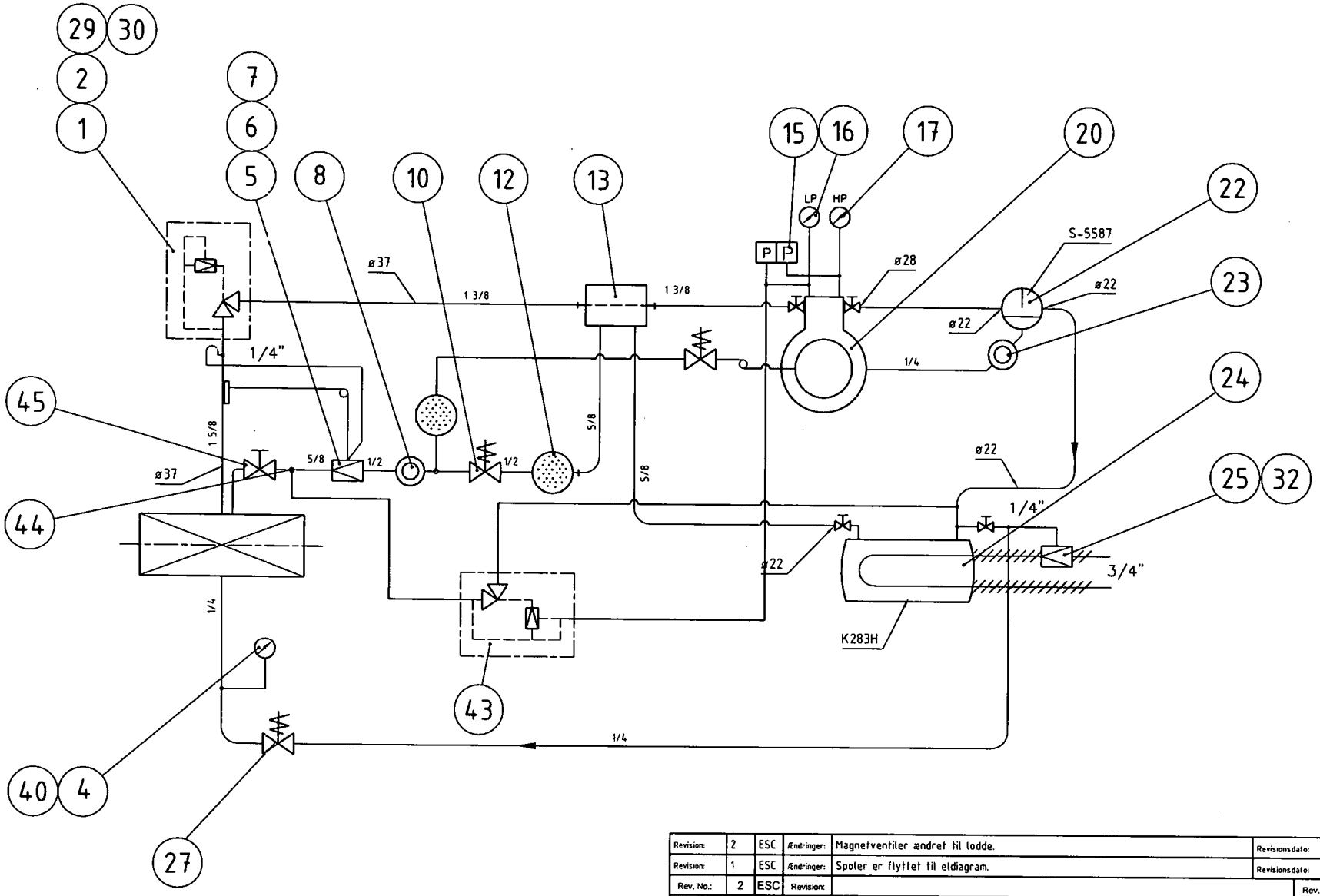

Revision:	2	ESC	Ændringer:	Magnetventiler ændret til lodde.	Revisionsdato:	11.03.07
Revision:	1	ESC	Ændringer:	Spoler er flyttet til eldiagram.	Revisionsdato:	14.12.06
Rev. No.:	2	ESC	Revision:		Rev. Date:	22-12-2006

WCB Ice Cream

An Alliance Company

Drawn by:	ESC
Date:	07-11-2006
Material:	
Drawing Size / Scale:	A3 / 1:1
Old drawing No.:	T56951

Køle diagram

med Scroll kompressor Lodde TE5

Drawing No.: T63666

Rev. No.: 2

Tolerances according to DIN ISO 2768-m if nothing else is specified.

Do not copy or distribute to third party without approval by WCB Ice Cream Denmark

503
501

T59550 Air system

PART NO.	POS.	DESCRIPTION	NUMBER
T1004202	7	Filter regulator	1
T1004377	8	Fittings for filter regulator	1
T1003973	9	Manometer	1
T3003351	15	Mass flowmeter	1
T1004203	17	Non return valve	1
T1003451	18	Micro filter	1
T1004869	22	L-piece	4
07HP440589	510	Mountings for pressure transmitter	1

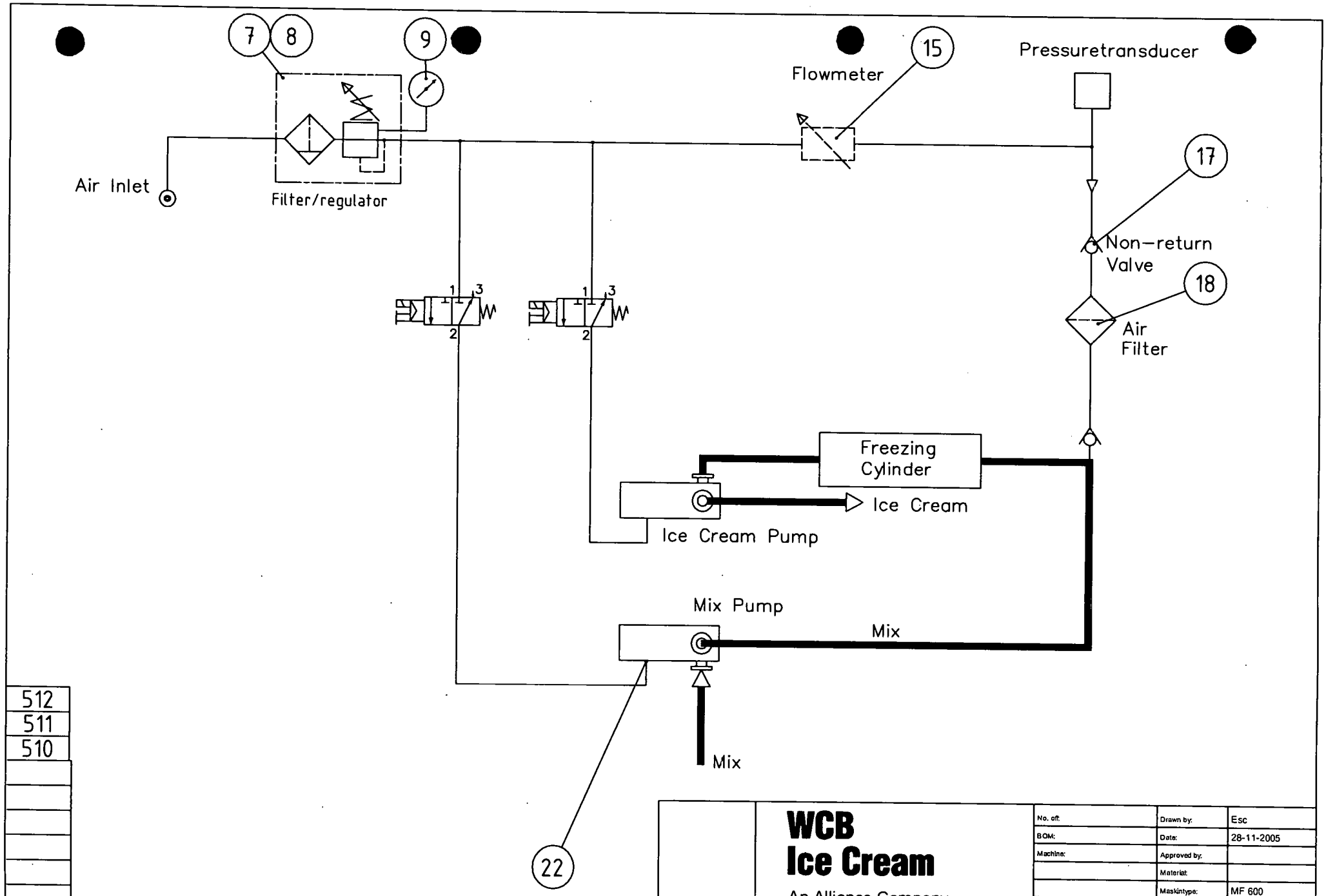

WCB Ice Cream

An Alliance Company

Luftsystem

med Buerkert u profibus

No. off:		Drawn by:	Esc
BOM:		Date:	28-11-2005
Machine:		Approved by:	
		Material:	
		Maskintype:	MF 600
Drawing Size	A3	Old drawing No.:	T57306
Scale: 1:1		Drawing No.: C T59550	

Tolerance according to DIN ISO 2768-m if nothing else is specified.

Do not copy or distribute to third party without approval by WCB Ice Cream A/S, Graham Bells Vej 6, DK-8200 Århus N

T57391 Piping for Mix

PART NO.	POS.	DESCRIPTION	NUMBER
T1004219	1	Collar	1
T1003387	2	Seal ring	2
T1003383	3	Clamp ring	4
T1003835	4	Elbow	1
T1003388	5	Seal ring	2
T1004016	6	Collar, clamp	2
T1003453	7	Elbow	1
T1007160	8	Reducer	1
T22707	11	O-ring valve	1
T1001784	12	O-ring	1

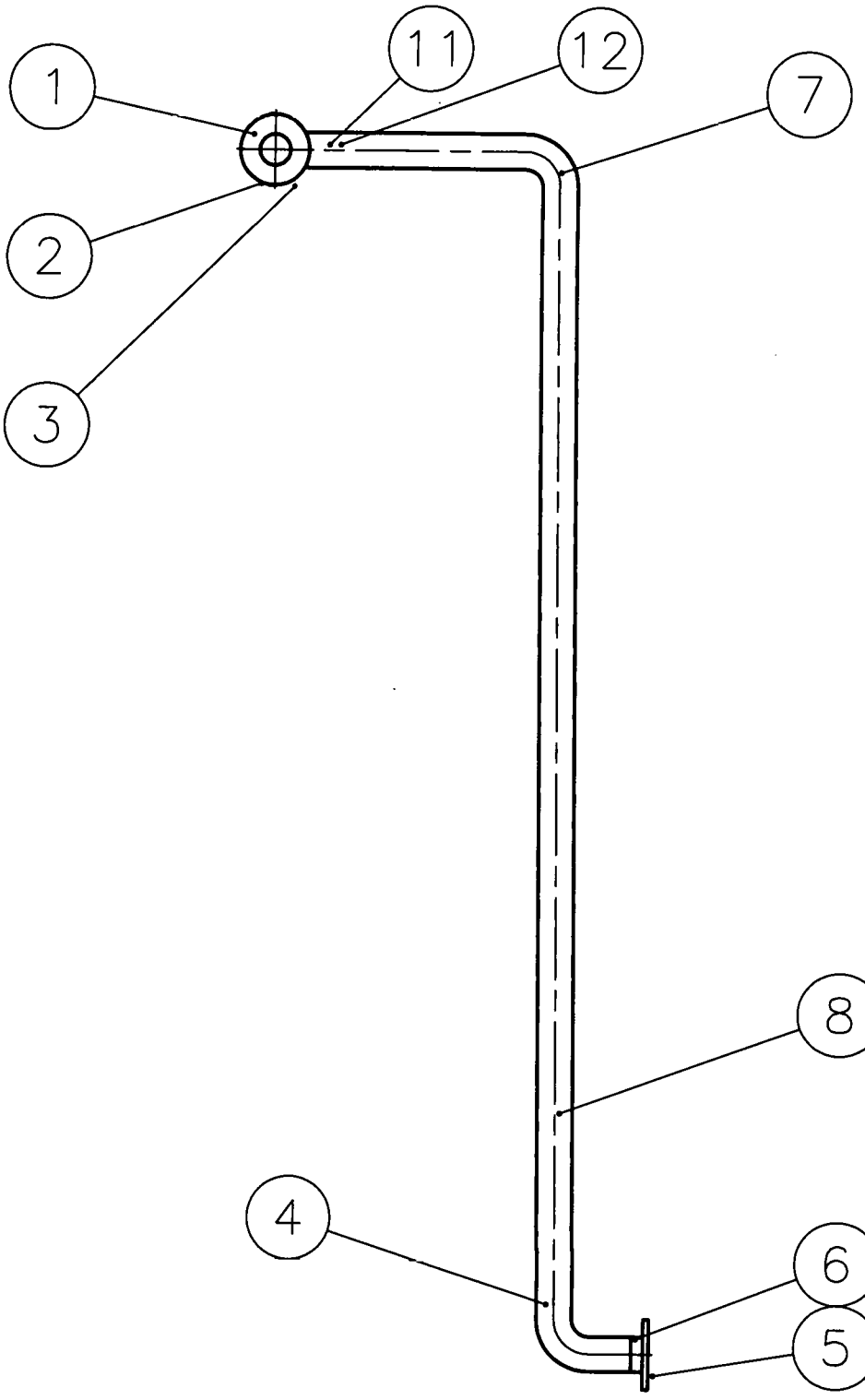

WCB Ice Cream

An Alliance Company

Rør

Mix rør Clamp og CP0 med ISO Clamp

No. off:		Drawn by:	Esc
BOM:		Date:	03-05-2005
Machine:		Approved by:	
		Material:	
		Maskintype:	MF 600
Drawing Size	A4	Old drawing No.:	T53575

Scale: 1:5

Drawing No.: D T57391

Tolerance according to DIN ISO 2768-m if nothing else is specified.

Do not copy or distribute to third party without approval by WCB Ice Cream A/S, Graham Bells Vej 6, DK-8200 Århus N

T57390 Piping for Ice cream

PART NO.	POS.	DESCRIPTION	NUMBER
T1004016	1	Collar, clamp	3
T1003835	2	Elbow	1
T1005536	3	Elbow	2
T1003383	5	Clamp ring	3
T1003388	7	Seal ring	3

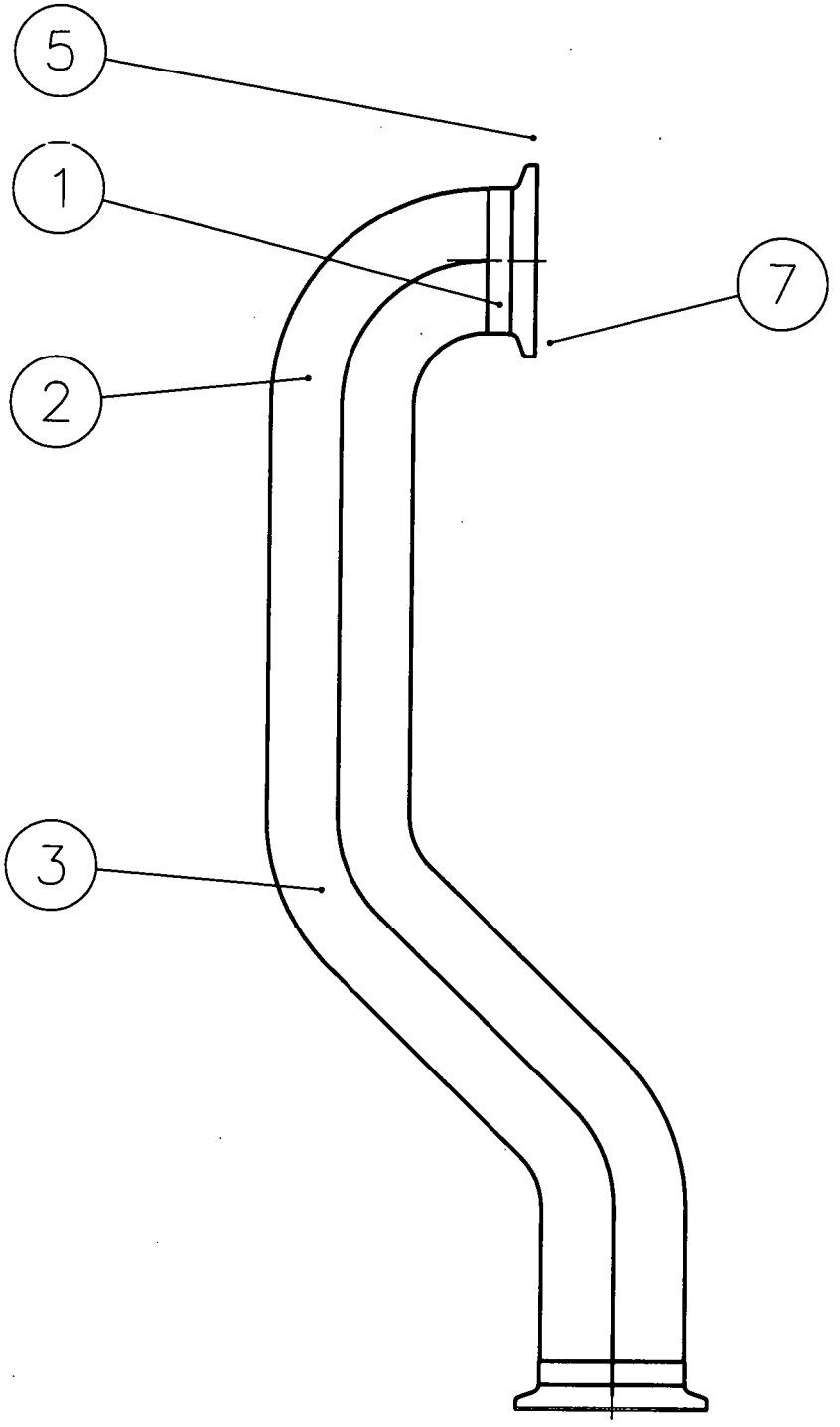

WCB Ice Cream

An Alliance Company

Rør

for Creme CP0 med ISO Clamp

No. off:		Drawn by:	Esc
BOM:		Date:	03-05-2005
Machine:		Approved by:	
		Material:	
		Maskintype:	MF 600
Drawing Size	A4	Old drawing No.:	T53573

Scale: 1:2

Drawing No.: D T57390

Tolerance according to DIN ISO 2768-m if nothing else is specified.

Do not copy or distribute to third party without approval by WCB Ice Cream A/S, Graham Bells Vej 6, DK-8200 Århus N

T58175 Elec. parts list, MFx00 GA, ver 3.0

PART NO.	POS.	DESCRIPTION	NUMBER
T3002900	091	Pressure transmitter	1
T3002975	106	Input S7 analog	1
T3001080	107	Pin connector, 20 pol	2
T3001584	108	Output S7 analog	1
T3003360	112	Pro-face CF card	1
T1007056	130	Temperature probe PT100	1
T1004397	131	Welding nipple for PT100	1
T1007857	200	Cable for Mass flowmeter	1
T3003354	201	Cable	1

T61582 Elec. parts list - MF Gx, ver. 3.1

PART NO.	POS.	DESCRIPTION	NUMBER
T55942	000	Electrical enclosure	1
T3003183	030	Automatic fuse, 2A	1
T3002901	031	Transformer	1
T3002848	032	Automatic fuse, 3A	1
T3000832	033	Automatic fuse, 6A	1
T3003180	034	Relay	1
T3002829	070	E-stop relay, 2-channels	1
T3002509	071	Emergency stop button	1
T3002576	072	Contact set	1
T3000290	080	Relay, 1 pole with light diode	3
T3000238	081	Socket for relay	3
T3003167	090	Transformer	1
T3001004	100	Transformer	1
T3003166	101	CPU	1
T3002876	102	RAM module	1
T3001595	104	40-pin connector incl. cable	2
T3003292	110	Operating panel - ProFace	1
T3003298	111	Cable	1
T1007176	140	Solenoid Valve	1
T3003023	141	Cable for main valve	2
T1007063	142	Solenoid Valve	1
T3002770	150	Interface module	1
T3003354	151	Cable	1
T1007857	152	Cable for Mass flowmeter	1

T61909 Elec.parts list, Motor starter Ver. 3.1

PART NO.	POS.	DESCRIPTION	NUMBER
T3000788	001	Circuit breaker, 22 KW	1
T3003674	002	Door handle	1
T3002533	003	Contactor	1
T3002105	004	Auxiliary block	2
T3000950	005	Varistor	2
T3001628	006	Circuit breaker, manual operated, 15kW	1
T3000847	007	Auxiliary block	2
T3000953	008	Contactor	1
T3001041	009	Help block	1
T3001014	010	Circuit breaker, 7.5 kW	1
T3003312	011	Soft starter	1
T3003313	012	Ventilator for Soft starter	1
T3002977	013	Automatic fuse, 16A	2
T3003654	016	Sinamics, 0.75kW	2
T3003366	017	Sinamics BOP	1
T3003751	018	Membrane collar	1

Table of contents:

Siemens	Frequency converter – Sinamics BOP
Høyer Motors	Induction motor – Machine instructions
Bitzer	Pressure vessel
Norgren	Filter regulator
Bürkert	MassFlow Controller 8712
Danfoss	Capacity regulator CPCE + LG
Danfoss,	Interface module – EKC 366
Danfoss,	Main valve PM 1 25
Danfoss	Solenoid valve EVR 6,10
Danfoss,	Electric pilot valve CVQ
Danfoss	Thermo valve TE 5
Danfoss	High pressure switch KP15
Danfoss	Water valve WVFX 25
Danfoss	Filter drier DML/DCL

Operating Instructions Edition 11/2004

sinamics

G110

SINAMICS G110

SIEMENS

C Fitting the Basic Operator Panel

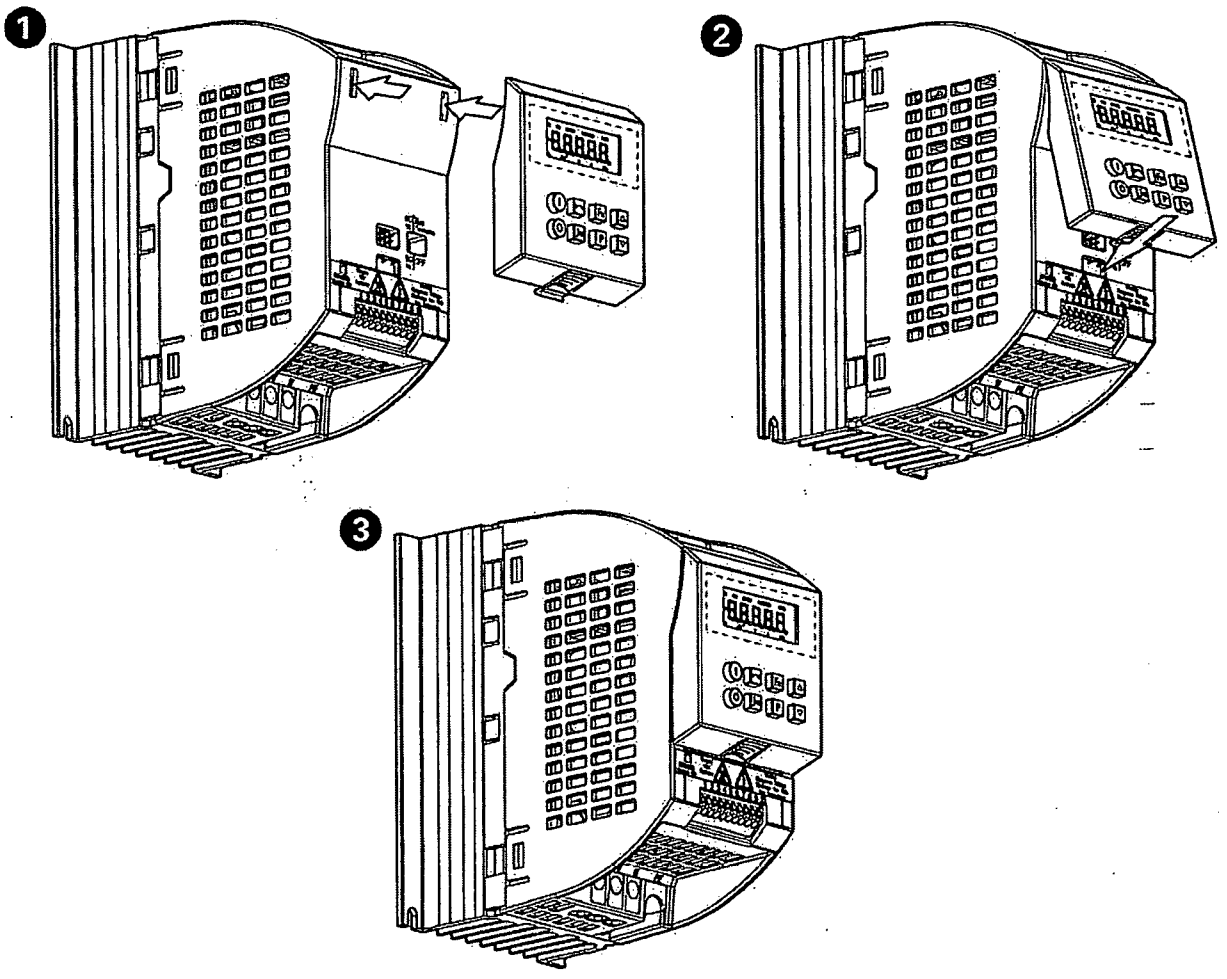

D Description of the BOP

Panel/Button	Function	Effects
	Indicates Status	The LCD displays the settings currently used by the converter.
	Start motor	Pressing the button starts the inverter. This button is disabled by default. To enable this button set P0700 = 1.
	Stop motor	OFF1 Pressing the button causes the inverter to come to a standstill at the selected ramp down rate. OFF2 Pressing the button twice (or once long) causes the motor to coast to a standstill. This function is always enabled.
	Change direction	Press this button to change the direction of rotation of the motor. Reverse is indicated by a minus (-) sign or a flashing decimal point. Disabled by default, to enable set P0700 = 1.
	Jog motor	Pressing this button while the inverter has no ON command causes the motor to start and run at the preset jog frequency. The inverter stops when the button is released. Pressing this button when the inverter/motor is running has no effect.
	Functions	This button can be used to view additional information. Pressing and holding the button for 2 seconds from any parameter during operation, shows the following: 1. DC link voltage (indicated by d – units V). 2. Output voltage (indicated by o – units V). 3. Output frequency (Hz). 4. The value selected in P0005. Additional presses will toggle around the above displays. A short press of the button will acknowledge a fault condition. **Jump Function** From any parameter (rXXXX or PXXXX) a short press of the Fn button will immediately jump to r0000, you can then change another parameter, if required. Upon returning to r0000, pressing the Fn button will return you to your starting point.
	Access parameters	Pressing this button allows access to the parameters.
	Increase value	Pressing this button increases the displayed value.
	Decrease value	Pressing this button decreases the displayed value.

3.4.8 Cloning Parameters with the BOP

Warning

During the download of parameters from the BOP to the inverter, the digital output may produce a spurious signal. Prior to performing a download from the BOP to the inverter appropriate counter-measures **must** be taken to ensure that any suspended load is secured, for example, by the use of external brakes or the load being lowered to ground level and secured.

A single parameter set can be uploaded from an inverter and then downloaded into another inverter. To clone a parameter set from one inverter to another, the following procedure should be performed:

1. Connect the Basic Operator Panel (BOP) to the inverter.
2. Ensure that it is safe to stop the inverter.
3. Stop the inverter.
4. Set parameter P0003 to 3.
5. Set parameter P0010 to 30 to enter Cloning Mode.
6. Set parameter P0802 to 1 to start the upload from the Inverter to the BOP.
7. During the upload "BUSY" will be displayed.
8. The BOP and the inverter will not react to any commands during upload.
9. If the upload has been completed successfully, the BOP display will return to normal and the inverter will return to a ready state.
10. If the upload has failed:
    a. Attempt another upload.
    or
    b. Perform a factory reset.
11. The BOP can now be removed from the inverter.
12. Connect the BOP to the new inverter.
13. Ensure power is applied to the inverter.
14. Set parameter P0003 to 3.
15. Set parameter P0010 to 30 to enter Cloning Mode.
16. Set parameter P0803 to 1 to start the download from the BOP to the inverter.
17. During the download "BUSY" will be displayed.
18. During download the BOP and the inverter will not react to any commands during download.
19. If the download has been completed successfully, the BOP display will return to normal and the inverter will return to a ready state.
20. If the download has failed:
    a. Attempt another download.
    or
    b. Perform a factory reset.
21. The BOP can now be removed from the inverter.

The following important restrictions should be considered when using the Cloning procedure:

➢ Only the current dataset is uploaded to the BOP.

- Once the cloning procedure has started, it cannot be interrupted.
- It is possible to copy data from inverters of different power and voltage ratings.
- During download, if the data is not compatible with the inverter, the default values for the parameter will be written to the inverter.
- During the cloning process any data already held by the BOP is overwritten.
- If the download or upload of data fails, the inverter will not function correctly.

Note

1. After cloning parameters between differing variants of the SINAMICS G110 inverters (i.e. Analog to USS or USS to Analog) the following parameter must be checked:
   - P0719 – Selection of command and frequency setpoint
   - P1000 – Selection of frequency setpoint.
2. When cloning parameter sets associated with different firmware releases using the BOP, it should be noted that for new parameters, the default value is entered.

6 Troubleshooting

WARNINGS

- Repairs on equipment may only be carried out by **Siemens Service**, by repair centers **authorized by Siemens** or by **authorized** personnel who are thoroughly acquainted with all the warnings and operating procedures contained in this manual.
- Any defective parts or components must be replaced using genuine Siemens authorized parts.
- Risk of electric shock. The DC link capacitors remain charged for five minutes after power has been removed. **It is not permissible to open the equipment until 5 minutes after the power has been removed.**

6.1 Troubleshooting with the Standard Inverter LED

The following is a description of the fault and warning indications given by the LED on the Standard Inverter:

- Inverter Off/No supply: No LED lit.
- Power On/Ready: 1000 ms On/1000 ms Off
- Inverter Running OK: Steady LED
- General Warning: 500 ms On / 200 ms Off
- Fault Condition: 100 ms On / 100 ms Off

6.2 Troubleshooting with the BOP

If the display shows a fault or warning code, please consult the Faults and Warning section of the SINAMICS G110 Parameter List.

If the motor fails to start when the ON command has been given:

- Check that P0010 = 0.
- Check that a valid ON signal is present (see example on page 66).
- Check that P0700 = 1 (for BOP control) or
  P0700 = 2 (for digital input control) or
  P0700 = 5 (for USS input control – USS variant only)
  P0719 is set to the correct Command and Frequency Setpoint.
- Check that the setpoint is present (0 to 10V on Terminal 9) or the setpoint has been entered into the correct parameter, depending upon the setpoint source (P1000). See the Parameter List for further details.

If the motor fails to run after changing the parameters then:

1. Set P0010 = 30
2. Set P0970 = 1
3. Press P to reset the inverter to the factory default parameter values.
4. Use a switch between terminals **3** and **6** on the control board.
5. The inverter should now run to the setpoint defined by either the analogue input or transmitted via the USS serial link communications.

NOTE
Motor data must relate to the inverter data power range and voltage.

Checking for an ON Command

If, for example, DIN0 on terminal 3 was set-up to give an ON command, the following procedure would allow the user to check that an ON command is present:

1. Ensure the BOP is connected to the inverter.
2. Set P0003 = 3.
3. Select parameter r0722.
4. The Seven-segment display will indicate the active bits as follows:

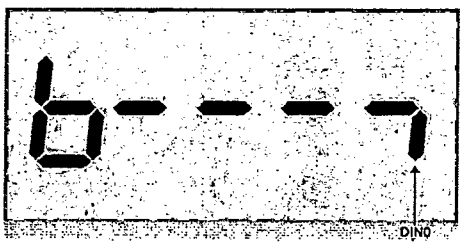

5. The lower mark on the right-hand side of the display indicates that DIN0 is active high, that is, an ON command is present.

If the active high bit is not present it indicates that a ON command in not present. In such a case it is necessary to check the hardware configuration to ensure that DIN0 was, in fact, set-up for the ON command.

In the case of ON/OFF control via the RS485 bus (USS protocol) the relevant bit (bit 02) of status word 1 (r0052) can be found in the following position:

2 Faults and Alarms

2.1 Fault messages

In the event of a failure, the inverter switches off and a fault code appears on the display.

NOTE
To reset the fault code, one of three methods listed below can be used:

&\ FOH VWH SRZ HUVRI VWH GULYH

3 UHVV VWH FN EXWWRQ RQ VWH %2 3

3. Via Digital Input 2 (default setting)

Fault messages are stored in parameter r0947 under their code number (e.g. F0003 = 3). The associated error value is found in parameter r0949. The value 0 is entered if a fault has no error value.

F0001 Overcurrent — STOP II

Quit
reset fault memory / Stop

Cause
- Motor power (P0307) does not correspond to the inverter power (r0206)
- Motor lead short circuit
- Earth faults

Diagnosis & Remedy
Check the following:
- Motor power (P0307) must correspond to inverter power (r0206).
- Cable length limits must not be exceeded.
- Motor cable and motor must have no short-circuits or earth faults
- Motor parameters must match the motor in use
- Value of stator resistance (P0350) must be correct
- Motor must not be obstructed or overloaded
- Increase Ramp-up time (P1120)
- Reduce Starting boost level (P1312)
- Check fault value r0949:
  0 = hardware generated trip
  1 = software generated trip

F0002 Overvoltage — STOP II

Quit
reset fault memory / Stop

Cause
- Main supply voltage too high
- Motor is in regenerative mode

NOTE
Regenerative mode can be caused by fast ramp downs or if the motor is driven by an active load.

Diagnosis & Remedy
Check the following:
- Supply voltage must lie within limits indicated on rating plate.
- Vdc controller must be enabled (P1240) and parameterized properly.
- Ramp-down time (P1121) must match inertia of load.
- Required braking power must lie within specified limits.
- Check fault value r0949:
  0 = hardware generated trip
  1 = software generated trip at inverter's internal nominal state

NOTE
Higher inertia requires longer ramp times.

F0003 Undervoltage — STOP II

Quit
reset fault memory / Stop

Cause
- Main supply failed.
- Shock load outside specified limits.

Diagnosis & Remedy
- Check Supply voltage.
- Check fault value r0949:
  0 = hardware generated trip
  1 = software generated trip at undervoltage state
  2 = software generated trip at inverter's internal nominal state

F0004 Inverter Over Temperature — STOP II

Quit
reset fault memory / Stop

Cause
- Inverter overloaded
- Ventilation inadequate
- Pulse frequency too high
- Ambient temperature too high

Diagnosis & Remedy
Check the following:
- Load or load duty cycle too high?
- Motor power (P0307) must match inverter power (r0206)
- Pulse frequency must be set to default value
- Ambient temperature too high?

F0005 Inverter I2T — STOP II

Quit
reset fault memory / Stop

Cause
- Inverter overloaded.
- Duty cycle too demanding.
- Motor power (P0307) exceeds inverter power capability (r0206).

Diagnosis & Remedy
Check the following:
- Load duty cycle must lie within specified limits.
- Motor power (P0307) must match inverter power (r0206)

F0011 Motor Over Temperature I2T — STOP II

Quit
reset fault memory / Stop

Cause
Motor overloaded

Diagnosis & Remedy
Check the following:
- Load or load duty cycle too high?
- Motor thermal time constant (P0611) must be correct
- Motor I2t warning level (P0614) must match

F0051 Parameter EEPROM Fault — STOP II

Quit
reset fault memory / Stop

Cause
Read or write failure while access to EEPROM.

Diagnosis & Remedy
- Factory Reset and new parameterization
- Change drive

F0052 Power Stack Fault — STOP II

Quit
reset fault memory / Stop

Cause
Read failure for power stack information or invalid data.

Diagnosis & Remedy
Change drive

F0055 BOP-EEPROM Fault — STOP II

Quit
reset fault memory / Stop

Cause
Read or write failure while saving non-volatile parameter to EEPROM on BOP whilst parameter cloning.

Diagnosis & Remedy
- Factory Reset and new parameterization
- Change BOP

F0056 BOP not fitted — STOP II

Quit
reset fault memory / Stop

Cause
Trying to initiate parameter cloning without BOP fitted.

Diagnosis & Remedy
Fit BOP and try again.

F0057 BOP fault — STOP II

Quit
reset fault memory / Stop

Cause
- Parameter cloning with empty BOP.
- Parameter cloning with invalid BOP.

Diagnosis & Remedy
Download to BOP or replace BOP.

F0058 BOP contents incompatible — STOP II

Quit
reset fault memory / Stop

Cause
Trying to initiate parameter cloning with BOP created on another type of drive.

Diagnosis & Remedy
Download to BOP from this type of drive.

F0060 Asic Timeout — STOP II

Quit
reset fault memory / Stop

Cause
Internal communications failure

Diagnosis & Remedy
- If fault persists, change inverter.
- Contact Service Department
- Check fault value r0949:
  0 = generated by ASIC
  1 = software generated trip

F0072 USS Setpoint Fault — STOP II

Quit
reset fault memory / Stop

Cause
No setpoint values from USS during telegram off time

Diagnosis & Remedy
Check USS master

F0085 External Fault — STOP II

Quit
reset fault memory / Stop

Cause
External fault triggered via terminal inputs

Diagnosis & Remedy
Disable terminal input for fault trigger.

F0100 Watchdog Reset — STOP II

Quit
reset fault memory / Stop

Cause
Short power dip or Software Error

Diagnosis & Remedy
F0100 trips may happen after a short power dip. In this case there is no problem with the inverter itself. However if an F0100 is experienced without a loss of power in the case of normal operation then the Service Department should be contacted.

F0101 Stack Overflow — STOP II

Quit
reset fault memory / Stop

Cause
Software error or processor failure

Diagnosis & Remedy
Run self test routines

2.2 Alarm Messages

Alarm messages are stored in parameter r2110 under their code number (e.g. A0503 = 503) and can be read out from there.

NOTE

- Alarm messages are displayed as long as the alarm condition exists. If the alarm condition ceases, the alarm message will disappear.
- It is not possible to stop alarm messages.

A0501 Current Limit

Cause
- Motor power does not correspond to the inverter power
- Motor leads are too long
- Earth faults

Diagnosis & Remedy

Check the following:
- Motor power (P0307) must correspond to inverter power (r0206).
- Cable length limits must not be exceeded.
- Motor cable and motor must have no short-circuits or earth faults
- Motor parameters must match the motor in use
- Value of stator resistance (P0350) must be correct
- Motor must not be obstructed or overloaded
- Increase Ramp-up time (P1120)
- Reduce Starting boost level (P1312)

A0502 Overvoltage Limit

Cause

Overvoltage limit is reached. This warning can occur during ramp down, if the Vdc controller is disabled (P1240 = 0).

Diagnosis & Remedy

If this warning is displayed permanently, check drive input voltage.

A0503 Undervoltage Limit

Cause
- Main supply failed
- Main supply and consequently DC-link voltage (r0026) below specified limit.

Diagnosis & Remedy

Check main supply voltage.

A0505 Inverter I2T

Cause

Warning level exceeded, current will be reduced if parameterized (P0610 = 1)

Diagnosis & Remedy

Check that duty cycle lies within specified limits.

A0511 Motor Over Temperature I2T

Cause
- Motor overloaded.
- Load duty cycle too high.

Diagnosis & Remedy

Check the following:
- P0611 (motor I2t time constant) should be set to appropriate value
- P0614 (Motor I2t overload warning level) should be set to suitable level

A0910 Vdc-max Controller de-activated

Cause

Occurs
- if main supply voltage is permanently too high.
- if motor is driven by an active load, causing motor to goes into regenerative mode.
- at very high load inertias, when ramping down.

Diagnosis & Remedy

Check the following:
- Input voltage must lie within range.
- Load must be match.

A0911 Vdc-max Controller active

Cause

Vdc max controller is active; so ramp-down times will be increased automatically to keep DC-link voltage (r0026) within limits.

Diagnosis & Remedy

Check the following:

- Supply voltage must lie within limits indicated on rating plate.
- Ramp-down time (P1121) must match inertia of load.

NOTE

Higher inertia requires longer ramp times.

A0920 ADC parameters not set properly

Cause

ADC parameters should not be set to identical values, since this would produce illogical results

Diagnosis & Remedy

Check P0757, P0758, P0759, P0760

A0923 Both JOG Left and JOG Right are requested

Cause

Both JOG right and JOG left have been requested. This freezes the RFG output frequency at its current value.

Diagnosis & Remedy

Do not press JOG right and left simultaneously.

SVEND HØYER A/S

Kæder · Gear · Elmotorer

HØYER Motors

Induction motor

Machine Instructions 3

Drehstrom-Käfigläufermotor

Betriebsanleitung 6

Moteu á cage

Notice technigue 9

Motores de jaula de ardilla

Instrucciones 13

Motore a Gabbia di Scoiattolo

Istruzioni 16

Kortsluten motor

Motorinstruktioner 19

Elmotorer

Motorinstruktioner 22

Declaration of Conformity

Declaration of Conformity with respect to the Low voltage Directive 73/23/EEC amended by Directive 93/68 EEC are issued separately with individual motors.

The declaration of Conformity also satisfies the requirements of a Declaration of Incorporation with respect to the Machinery Directive 89/392/EEC.

Validity

The instructions are valid for the following Høyer electrical motor types, in motor operation.

Aluminiummotors	MS 56-132
Cast motors	Y90-355

(Additional information may be required for some motor types due to special application and/or design considerations.)

Activating the motor

Acceptance inspection
Immediately upon receipt check the motor for external damage and if found, inform the forwarding agent right away.

Check all rating plate informations, especially voltage and winding connection (star or delta).

Turn shaft by hand to check free rotation, remove transport locking if used.

Insulation resistance check
Measure insulation resistance before commissioning and when winding dampness is suspected.

Resistance, measured at 25° C shall exceed the reference value, Ie

$RI\ [M\Omega] \geq (20 \cdot U) / (1000 + 2P)$,

Where U = voltage in Volts; P = power output in kW

WARNING
Windings should be discharged right away after measurement to avoid risk for electric shock.

Insulation resistance reference value is halved for each 20° C rise in surrounding temperature.
If the reference resistance value is not secured, the winding is too damp and must be oven dried.
Oven temperature should be 90° C for 12-16 hours followed by 105° C for 6-8 hours.

If drain hole plugs are fitted, they must be removed during heating.

If windings get soaked in sea water, they normally need to be rewound.

Direct start or star-delta start
The terminal box on standard single speed motors normally contains 6 winding terminals and at least one earth terminal.

Earthing shall be carried out according to local regulations before the motor is connected to the supply voltage.

The voltage and connection are stamped on the rating plate.

Direct starting
Y or Δ winding connections may be used. eg 660 VY, 400 VΔ indicates Y-connection for 660 V and Δ-connection for 400 V.

Star-Delta start (Y/Δ):
The supply voltage must be equal to the rated voltage of the motor in Δ-connection.
Remove all connection links from the terminal block.

For two-speed and special motors, supply connection must follow the instructions inside the terminal box.

Terminals and direction of rotation
Direction of rotation is clockwise when viewing the shaft face at the motor drive end, when the line phase sequence L1, L2, L3 is connected to the terminals as shown in enclosed drawing.

By interchanging the connection of any two line cables, the direction and rotation is altered.

If the motor has a uni-directional fan check that the direction of rotation is according to the arrow marked on the motor.

Employment

Operating environment
The motor is meant for use in industrial environments.
Normal surrounding temperature limits -25° to +40° C.
Maximum altitude 1000m above sea level.

Security precautions
The motor is intended to be installed and used by qualified personel who are familiar with relevant safety requirements.

Safety equipment necessary for the prevention of accidents at the mounting and operating site shall be provided in accordance with the normal regulations in the local country.

WARNING
Small motors with supply current directly switched by thermally sensitive switches can start automatically.

Important
- the motor shall not be used to step on
- the outer casing of the motor may be very hot, even during normal operation
- some special motor applications require special instructions (eg using frequency converter supplies).

Handling

Storage
All motor storage should be done indoors, in dry, vibration free and dust free conditions.

Unprotected motor surfaces (shaft-ends and flanges) should be given anti-corrosion coatings.
It is recommended that shafts are rotated periodically by hand to prevent grease migration.
Anti condensation heaters, if fitted, should preferably be energized.

The characteristics of electrolytic capacitors, if fitted to single-phase motors, will require "reforming" following periods of storage beyond 1-2 years. Contact Svend Høyer A/S for details.

Installation

Base
The purchaser bears full responsibility for preparation of the base.

Metal bases should be painted to avoid corrosion.

The base must be even, and sufficiently rigid to withstand possible short circuit forces. They shall be dimensioned as to avoid the occurrence of vibration due to resonance.

Base studs
Bolt the base studs to the feet of the motor and place a 1-2 mm shim between the stud and the feet.

Align the motor by using appropriate means.

Grout the studs with concrete, check alignment, and drill holes for locating pins.

Drain holes
If the mounting designation differs from standard, check that open drain holes face downwards.
Motors with closable plastic drain plugs are delivered with these in the open position.
In extremely dusty environments all drain holes should be closed.

Setup
Correct setup is essential to avoid problems with bearings, vibrations and possible fractured shaft extensions.

Connection
The normal motor design is with cable entries on both sides and with terminal box on top.
Motors are available with top mounted terminal boxes rotatable 4 x 90, and some with side mounted terminal boxes.

Availability of these solutions is described in the product catalogues.

If any cable entries are not in use, they must be closed.

Besides the main winding and earthing terminals the terminal box can also contain connections for thermistors, standstill heating elements, bimetallic switches, or Pt 100 resistance elements.

WARNING
Voltage may be connected at standstill inside the terminal box for heating elements or direct winding heating.

Connection diagrams for auxiliary elements are placed inside the terminal box cover.

WARNING
The capacitor in single-phase motors can keep a charge which appears across the motor terminals, even when the motor has reached standstill.

Assembly and disassembling

Important
These two jobs must be carried out by qualified personel using only suitable tools and working methods.

Bearings
Special care shall be taken with the bearings. Bearings shall be removed using pullers and fitted by heating or the use of specialized tools for the purpose.

Fitting coupling halves and pulleys
Coupling halves and pulleys shall be fitted using suitable equipment and tools that do not damage the bearings.

Never fit a coupling half or pulley by hammering into place or remove it using a lever pressed against the body of the motor.

Equilibration

The rotor of the motor is dynamically balanced.

As standard, balancing has been carried out using a full key.

Maintenance and greasing

Common check-up
- check the motor at regular intervals
- keep the motor clean and ensure free ventilation airflow
- check the condition of shaft seals (eg V-ring) and replace if necessary
- check the condition of connections and mounting and assembly bolts
- check the bearing condition by listening for unusual noise, vibration measurement, bearing temperature, inspection of spent grease or SPM bearing monitoring "When changes of condition occur, dismantle the motor, check the parts and replace if necessary."

Greasing
Motors with eternal greased bearings.
Motors up to frame size 200 are normally fitted with eternal greased bearings of the 2RS type. Bearing types are specified in the respective product catalogues.

Motors fitted with 2RS-bearings can be regreased by opening the motor, cleaning the bearings and bearing housings, and filling these with new grease approximately to a level around 50-70%.

Guidelines for regreasing intervals are:
20.000 - 40.000 duty hours for > 4 pole motors.
10.000 - 20.000 duty hours for 2 and 2/4 pole motors.
The shorter times are valid for larger frame sizes.

Motors fitted with grease nipples
Grease the motor while running.

If grease outlet plug fitted, remove temporarily when greasing, or permanently with automatic greasing.

If the motor is fitted with a greasing information plate, follow the values given, otherwise use values as follows.

Frame size	Amount of Grease (g)	3600 r/min	3000 r/min	1800 r/min	1500 r/min	1000 r/min	500-900 r/min
Ball bearings							
Lubrication intervals in duty hours							
112, 132	15	4200	4800	7000	7800	10000	10500
160, 180	20	3200	4200	6000	7000	9000	10000
200, 225	25	1600	3100	6500	6500	8500	9000
250, 280	35	800	2000	5000	6000	8000	8500
315	50	800	2000	4600	5500	7500	8000
355	60	-	1000	4000	5000	7000	8000
Roller bearings							
Lubrication intervals in duty hours							
200, 225	25	900	1500	4300	5000	6500	7000
250, 280	35	400	1000	3300	4500	6300	6800
315	60	400	1000	2700	3800	6000	6500
355	60	-	-	2200	3200	5500	6000

The table is prepared for horizontally mounted motors.

Greasing intervals for vertical motors are half of the above values.

The grease amount in the table is used if small quantities of fresh grease are replaced at regular intervals as above. The table values are based on 80° C bearing temperature. The values should be halved for every 15 K increase in bearing temperature.

If the maximum bearing temperature is 70° C, the table values may be doubled.

WARNING
The maximum operating temperature of the grease and bearings must not be exceeded.

Higher speed operation, eg frequency converter applications, or slower speed with heavy loading will require shortened greasing intervals. Consult Svend Høyer A/S in such cases.

Typically a doubling of speed will require a reduction of greasing intervals to approx. 40% of values tabulated above.

Suitability of bearings for high speed operation must also be checked.

Lubricants
When regreasing, use only special ball bearing grease with the following properties:
- good quality lithium base or lithium complex grease
- base oil viscosity 100-140 cST at 40° C
- consistency NLGI grade 2 or 3
- temperature range -30° C - +120° C, continuously.

Grease with the correct properties are available from all the major lubricant manufacturers.

If the make of grease is changed and compatibility is uncertain, grease several times at short intervals in order to displace the old grease.

Highly loaded and/or slowly rotating bearings require EP-grease.

If greasing intervals are short due to bearing temperatures of 80° C or above, use high temperature greases which normally permit approximately 15 K higher bearing temperatures.

If the surrounding temperature is below -25° C consult Svend Høyer A/S regarding the possible use of low temperature grease.

WARNING
Many greases can cause skin irritation and eye inflamation.
Follow all safety precautions specified by the manufacturer.

Spare parts
When ordering spare parts, the full type designation and product code as stated on the rating plate must be specified. If the motor is stamped with a serial manufacturing number, this should also be given.

Betriebsanleitung

Konformitätserklärung

Konformitätserklärung gemäß der Niederspannungsrichtlinie 73/23/EWG, geändert durch die Richtlinie 93/68/EWG, werden gesondert herausgegeben.

Die Konformitätserklärung erfüllt außerdem die Anforderungen einer Herstellererklärung gemäß der Maschinenrichtlinie 89/392/EWG.

Gültigkeit

Diese Betriebsanleitung bezieht sich auf die im folgenden genannten Baureihen aus dem Produktprogramm der Firma **Svend Høyer A/S**, Dänemark. Die Betriebsanleitung gilt für den Betrieb als Motor.

Aluminiummotoren: Baugröße MS 56-132
Guss Motoren: Baugröße Y90-355

(Bei Sonderausführungen oder speziellen Applikationen werden unter Umständen zusätzliche Informationen benötigt)

Inbetriebnahme

Eingangskontrolle
Unmittelbar nach der Entgegennahme sollte der Motor auf äußere Beschädigungen hin untersucht werden. Im Schadensfall sollte der verantwortliche Spediteur umgehend verständigt werden.
Die auf dem Motor angegebenen Daten, wie Spannung und Schaltungsart (Y = Sternschaltung und Δ = Dreieckschaltung), sollten unbedingt überprüft werden.

Die Motorwelle muss sich mit Handkraft bewegen lassen und frei drehbar sein. Evtl. angebrachte Transportsicherungen sind zu entfernen.

Isolationswiderstandsprüfung
Vor einer Inbetriebnahme und bei erhöhter Umgebungsfeuchtigkeit, muss der Isolationswiderstand nachgemessen werden.
Gemessen mit einem Isolationsprüfer (1000V DC) und bei einer Temperatur von 25°C, sollte der Isolationswiderstand RI die folgenden Bezugswerte übersteigen:

$RI\,[M\Omega] \geq (20 \cdot U) / (1000 + 2P)$

Mit U = Spannung [V]
P = Ausgangsleistung [kW]

ACHTUNG:
Um die Gefahr eines Stromstoßes für Menschen auszuschließen, müssen die Wicklungen unmittelbar nach der Messung entladen werden.

Bei erhöhten Umgebungstemperaturen ist der angegebene Bezugswert pro 20°C Steigerung zu halbieren.

Sollte der Bezugswert nicht erreicht werden können, liegt dieses an einer zu hohen Feuchtigkeit innerhalb der Motorwicklungen. Eine Trocknung des Motors ist deshalb erforderlich. Der Motor sollte bei einer Trockentemperatur von 90°C in einem Trockenofen über einen Zeitraum von 12 bis 16 Stunden getrocknet werden. Die Schlusstrocknung muss bei einer Temperatur von 105°C über einen Zeitraum von 6 bis 8 Stunden durchgeführt werden.
Eventuelle Verschlüsse oder Pfropfen müssen vor dem Trockenvorgang entfernt werden, damit die Feuchtigkeit aus dem Motor entweichen kann.

Sollten die Wicklungen mit Salzwasser in Berührung gekommen sein, müssen diese Wicklungen in der Regel ausgetauscht werden.

Direkteinschaltung oder Stern-Dreieck-Anlauf
Im Anschlusskasten von einphasigen Standardmotoren finden Sie normalerweise sechs Anschlussklemmen und mindestens eine Erdungsklemme.

Eine Erdung muss in Übereinstimmung mit den jeweils national und regional geltenden Vorschriften vorgenommen werden.
Spannung und Leistungsart sind auf dem Motor angegeben.

Direkteinschaltung (DOL)
Es kann zwischen den Betriebsarten Sternschaltung und Dreieckschaltung gewählt werden. Die Angaben 660VY und 400VΔ geben die Anschlussart "Stern" für die Spannung 660V und die Anschlussart "Dreieck" für die Spannung 400V an.

Stern-Dreieck-Anlauf
Die Versorgungsspannung ist gleich der auf dem Motor angegebenen Spannung für die Dreieckschaltung. Alle Verbindungslaschen am Klemmenblock müssen entfernt werden.
Bei Motoren mit Polumschaltung und Sonderausführungen müssen die Angaben im Anschlusskasten beachtet werden.

Anschlussklemmen und Laufrichtung
Bei einer Betrachtung der Laufrichtung vom Antriebswellen ende (AS), läuft die Welle in Uhrzeigerrichtung, wenn die Phasen L1, L2, L3 der Versorgungsspannung wie auf der beigelegten Zeichnung angeschlossen sind.

Die Laufrichtung ändert sich, sobald zwei beliebe Anschlussleitungen vertauscht werden.
Falls der Motor mit einem drehrichtungsabhängigen Lüfter ausgestattet sein sollte, ist die Übereinstimmung der Laufrichtung mit dem auf dem Motor angebrachten Pfeilsymbol zu überprüfen.

Anwendung

Betriebsbedingungen
Die Motoren sind für die Anwendung in industriellen Antriebssystemen gebaut. Die standardmäßigen Grenzwerte der Umgebungstemperatur liegen im Bereich von -25°C bis zu 40°C. Die maximale Installationshöhe beträgt 1000 Meter über Normal Null (NN).

Sicherheitshinweise
Die Installation und der Betrieb des Motors dürfen nur durch qualifizierte Fachkräfte erfolgen. Diese Personen müssen mit den jeweiligen Sicherheitsanforderungen vertraut sein.

hütung von Unfälle[illegible]rend der Aufstellung und während des Betriebes des Motors müssen mit den jeweiligen nationalen und regionale Sicherheitsbestimmungen übereinstimmen.

ACHTUNG:
Kleinere Motoren, die über einen temperaturabhängigen Schalter direkt an der Versorgungsspannung angekoppelt sind, können eventuelle selbstständig anlaufen.

Wichtig!
- Nicht auf den Motor treten oder steigen!
- Auch bei normalem Betrieb kann die Motoroberfläche heiß werden!
- Einige Applikationen, wie der Motorbetrieb mit Frequenzumrichter, können spezielle Informationen erfordern.

Handhabung

Lagerung
Die Motoren sind in geschlossenen Räumen trocken, vibrations- und staubfrei zu lagern.

Ungeschützte, schon bearbeitet Oberflächen (Wellenenden und Flansche) sind vor der Lagerung mit Korrosionsschutzmitteln zu behandeln.
Um eine gleichmäßige Schmierung auch im Lagerzustand zu erreichen, empfehlen wir Ihnen die Antriebswelle regelmäßig von Hand zu betätigen.

Evtl. vorhandene Heizelemente sollten angeschlossen werden.

Die für den Betrieb von einphasigen Motoren evtl. verwendeten Elektrolytkondensatoren müssen nach 1- bis 2-jähriger Lagerung neu formiert werden.
Nähere Informationen erhalten Sie bei Svend Høyer A/S.

Installation

Maschinenfundament
Der Käufer trägt die voller Verantwortung für die sachgemäßer Vorbereitung des Maschinenfundaments.
Metallfundamente sollten durch einen korrosionsfesten Anstrich geschützt sein.

Die Motorfundamente müssen eben und steif genug sein, um den erhöhten Kräften im Kurzschlussfall standhalten zu können. Die Fundamente müssen so ausgelegt sein, dass Schwingungen auf Grund von Resonanzen ausgeschlossen werden.

Entwässerungsöffnungen
Falls die Bauform nicht der Standardausführung entspricht, muss überprüft werden, ob alle Entwässerungsöffnungen nach unten gerichtet sind. Motoren, die verschließbare Kunststoffstöpsel enthalten, werden mit offenen Stöpseln angeliefert. In staubreicher Umgebung müssen alle Entwässerungsöffnungen permanent verschlossen sein.

Ausrichtung
Eine genaue Ausrichtung ist für die Vermeidung von Schwingungen, Lagerschäden und evtl. Bruch des Wellen ende von höchster Wichtigkeit.

Anschluss

Der Anschlusskasten befindet ist bei der Standardausführung auf der Oberseite des Motors und macht die Kabelzuführung von beiden Seiten möglich.

Motoren mit Anschlusskästen, die auf der Seite des Motors angebracht sind, sind auch erhältlich.
Die Verfügbarkeit dieser Motoren ist bei Svend Høyer A/S direkt zu klären.

Nicht benötigte Öffnungen am Anschlusskasten müssen verschlossen werden.

Neben den Anschlüssen für die Primärwicklung und den Erdungsklemmen, enthält der Anschlusskasten weitere Anschlussmöglichkeiten z.B. für Thermistoren, Ruheheizung, Bi-metall Schalter oder PT100 Widerstandsfühler.

WARNUNG:
Auch bei Motorstillstand können für Menschen gefährliche Spannungen, z.B. für die Versorgung von Heizelementen oder für die direkte Wicklungsheizung anliegen.

WARNUNG:
Bei einphasigen Motoren kann die Restladung des Kondensators auch bei stillstehendem Motor eine elektrische Spannung an den Motoranschlussklemmen bewirken.

Montage und Demontage

Generelles
Montage und Demontage des Motors dürfen nur durch qualifiziertes Fachpersonal und nur unter Verwendung geeigneter Hilfsmittel durchgeführt werden.

Die Lager
Die Lager müssen mit besonderer Sorgfalt behandelt werden. Sie dürfen nur mit dafür geeigneten Abziehwerkzeugen demontiert werden. Eine Montage darf nur in erwärmten Zustand oder unter Verwendung von Spezialwerkzeugen erfolgen.

Anbau von Riemenscheiben und Kupplungshälften
Riemenscheiben und Kupplungshälften dürfen nur mit dafür geeigneter Ausrüstung und Werkzeug montiert werden. Eine Beschädigung der Lager muss ausgeschlossen sein.
Schlagen Sie niemals eine Kupplungshälfte oder Riemenscheibe mit dem Hammer ein. Bei der Demontage darf die Hebelkraft niemals auf das Gehäuse einwirken.

Auswuchten

Der Rotor dieses Motors ist dynamisch ausgewuchtet.
Eine Auswuchtung mit voller Passfeder wurde standärdmäßig vorgenommen.

Wartung und Schmierung

Allgemeine Kontrolle
- Der Motor sollte in regelmäßigen Intervallen untersucht werden.
- Überprüfen Sie regelmäßig den Zustand der Wellendichtungen und erneuern Sie diese, falls notwendig.

- Der Motor sollte sauber gehalten w[illegible]und es sollte für einen ausreichenden kühlenden Luftstrom gesorgt werden.
- Überprüfen Sie alle Verschraubungen und Verbindungselemente
- Überprüfen Sie den Zustand der Lager:
  - Akustisch auf Schleifgeräusche
  - Vibrationsmessungen
  - Temperaturmessung des Lagers
  - Fettverbrauch des Lagers
  - SPM Lagerüberwachung

Bei einer Zustandsveränderung ist der Motor zu demontieren und alle Bauteile müssen untersucht und bei Bedarf ausgetauscht werden.

Schmierung
Motor mit permanent geschmierten Lagern
Motoren mit einer Achsenhöhe bis zu 200mm sind in der Regel mit permanent geschmierten Lagern des Typs 2RS ausgerüstet.

Motoren, die mit 2RS Lagern ausgerüstet sind, können nachgeschmiert werden. Der Motor muss dafür demontiert werden und die Lager und Lagergehäuse müssen gereinigt und mit 50% bzw. 70% Fett befüllt werden. Als Richtlinie für Nachschmierintervalle gilt:
20.000 bis 40.000 Betriebsstunden für vier-/mehrpolige Motoren.
10.000 bis 20.000 Betriebsstunden für zweipolige und zwei-/vierpolige Motoren.
Je höher die Achsenhöhe des Motors ist, desto kürzer sollten die Kontrollintervalle sein.

Motoren mit Nachschmierzapfen
Der Motor muss im Betriebszustand geschmiert werden.

Bei einem Motor mit Schmierstoffauslass Stopfen, muss der Stopfen während des Nachschmierens offen sein. Bei selbsttätig wirkenden Schmiersystemen, muss die Auslassöffnung immer offen gehalten werden.

Wenn der Motor mit einer Nachschmiermarkierung versehen ist, müssen Sie diesen Angaben folgen. Im übrige gelten die nachfolgenden Angaben.

Achshöhe	Fettmenge g	3600 r/min	3000 r/min	1800 r/min	1500 r/min	1000 r/min	600-900 r/min
Kugellager							
Nachschmierintervalle in Betriebsstunden							
112. 132	15	4200	4800	7000	7800	10000	10500
160, 180	20	3200	4200	6000	7000	9000	10000
200, 225	25	1800	3100	6500	6500	8500	9000
250, 280	35	800	2000	5000	6000	8000	8500
315	50	800	2000	4600	5500	7500	8000
355	60	-	1000	4000	5000	7000	8000
Rollenlager							
Nachschmierintervalle in Betriebsstunden							
200, 225	25	900	1500	4300	5000	6500	7000
250, 280	35	400	1000	3300	4500	6300	6800
315	50	400	1000	2700	3800	6000	6500
355	60	-	-	2200	3200	5500	6000

Diese Tabelle gilt nur für horizontal installierte Motoren. Bei wertikal installierten Motoren müssen die angegebenen Werte um 50% verringert werden.

Ist der Motor mit einem Schmierstoffauslassventil versehen, besteht die Möglichkeit, frische Schmierstoffe einzudrücken, bis ein kompletter Schmierstoffaustausch stattgefunden hat.

Die angegebenen Werte gehen von einer Lagerbetriebstemperatur von 80°C aus. Für jeweils 15°C mehr, müssen die Listenwerte halbiert werden.
Bei einer maximalen Lagerbetriebstemperatur von 70°C, können die angegebenen Listeriwerte verdoppelt werden.

WARNUNG:
Folgende Betriebsbedingungen verringern die Nachschmierfristen:
- Niedrige Drehzahlen mit hoher Belastung
- Hohe Drehzahlen (Frequenzumrichterbetrieb)

Bei Fragen wenden Sie sich bitte an Svend Høyer A/S.

Ein typischer Wert ist die Verringerung der angegebenen Werte um 40%, bei einer Verdopplung der Drehzahlen. Die Tauglichkeit der Lager für den Betrieb mit hohen Drehzahlen ist immer zu überprüfen.

Schmierstoffe
Für die Nachschmierung darf nur ein spezielles Fett verwendet werden. Dieses Fett muss auf die Schmierung von Kugellagern abgestimmt sein und muss folgende Eigenschaften haben:
- Fette auf Lithiumbasis oder Lithiumkomplexbasis
- Viskosität des Basisöls: 100cST bis 140cST bei 40°C
- Eine Konsistenz von NLGI Grad 2 oder Grad 3
- Betriebstemperatur von -30°C bis zu 120°C

Fette mit diesen Eigenschaften können Sie über alle nennenswerten Schmiermittelhersteller erhalten.
Sollten Sie beim Nachschmieren Zweifel über die Verträglichkeit der beiden Schmiermittel miteinander haben, sollte das neue Schmiermittel in kurzen Abständen nachgeschmiert werden, um das alte Schmiermittel komplett zu verdrängen.
Hochbelastbare Lager und besonders langsam laufende Lager müssen mit einem Spezialschmiermittel (EP-Fett) geschmiert werden.

Wird der Motor bei hoher Temperatur ((80(C) betrieben, sollte ein spezielles Hochtemperaturfett verwendet werden. Normalerweise erreichen Sie eine Betriebstemperaturbereichserhöhung um 15°C, wenn Sie ein solches Spezialfett verwenden.
Bei Umgebungstemperaturen unter -25°C sollten Sie zusammen mit der Svend Høyer A/S klären, ob ein spezielles Niedertemperaturfett eingesetzt werde kann.

Ersatzteile
Für eine korrekte Bestellung von Ersatzteilen, muss die komplette Typenbezeichnung (siehe Typenschild auf dem Motor) angegeben werden. Hat der Motor eine Seriennummer, sollte diese auch angegeben werden.

Notice technique pour moteur

Déclaration de Conformité
La Déclaration de Conformité à la directive européenne Basse Tension 72/23/CEE modifiée par la directive 93/68/CEE sont établies séparément pour chaque moteur.
La Déclaration de Conformité satisfait également les prescriptions de Déclaration d'Incorporation relatives à la Directive Européenne sur les Machines 89/392/CEE.

Validité

Cette notice technique s'applique aux types de moteurs électriques Høyer suivants, en phase d'exploitation.

Moteurs en aluminium	MS 56-132
Moteurs en fonte	Y90-335

(Des informations supplémentaires peuvent être nécessaires pour certains types de moteurs destinés à des utilisations spécifiques et / ou des constructions particulières.)

Pour la mise en service du moteur

Vérifications à la réception
Vérifiez le moteur dès réception, s'il y a présence d'endommagement extérieur, signalez-le immédiatement au transporteur.

Contrôlez toutes les indications se trouvant sur la plaque signalétique du moteur, en particulier la tension et le raccordement des enroulements (étoile ou triangle).

Faites tourner l'arbre à la main afin de vous assurer si celui tourne librement puis démontez ensuite le dispositif de blocage utilisé pendant le transport.

Vérification de la résistance d'isolement
Mesurez la résistance d'isolement avant toute mise en service du moteur et aussi s'il y a une présence suspecte d'humidité au niveau des enroulements.

La résistance d'isolement, mesurée à une température ambiante de 25°C doit être supérieure à la valeur de référence suivante

R_I [MΩ]≥ (20.U) / (1000 + 2P)

Où U = tension est en volts et P = puissance utile en kW

Attention!
Les enroulements devront être déchargés immédiatement après avoir effectué les mesures afin d' éviter tout risque de décharge électrique.

La valeur de référence de la résistance d'isolement est divisée par 2 chaque fois que la température ambiante augmente de 20°C.
Si la valeur de référence de la résistance n'est pas respectée, les enroulements sont alors trop humides et devront être séchés en étuve pendant 12 à16 heures à 90°C et ensuite pendant 6 à 8 heures à 105°C.

Si des bouchons pour orifice de vidange sont installés, Au cas où les enroulements auraient été en contact avec de l'eau de mer, ceux-ci devront être réenroulés à nouveau.

Démarrage direct ou étoile / triangle
La boîte à bornes sur les moteurs monovitesses standards comporte normalement 6 bornes permettant le raccordement des enroulements ainsi qu'une borne de terre.

La mise à la terre doit être effectuée conformément à la réglementation en vigueur avant de raccorder le moteur à la tension d'alimentation.

La tension et le type de raccordement sont estampillés sur la plaque signalétique du moteur.

Démarrage direct
Possibilité de raccordement Y ou Δ, par exemple 660 VY, 400 VΔ désigne un raccordement Y en 660V et un raccordement Δ en 400 V.

Démarrage Étoile / Triangle (Y / D):
La tension d'alimentation doit être égale à la tension assignée du moteur en raccordement Δ.
Retirez alors tous les contacts de pontage du bornier.

Pour les moteurs bi-vitesses et de constructions spéciales, les raccordements doivent être réalisés en fonction des indications figurant dans la boîte à bornes.

Bornes et sens de rotation
Le sens de rotation s'effectue dans le sens horaire vu du côté de l'accouplement du moteur, avec un ordre de phases L1, L2 & L3 sur les bornes, voir schéma en annexe.

Pour modifier le sens de rotation et la direction, permutez simplement le raccordement de deux fils.

Si le moteur est équipé d'un ventilateur à sens de rotation unique, vérifiez si celui-ci correspond au sens de la flèche située sur le moteur.

Utilisation

Conditions d'exploitation
Les moteurs sont destinés à des applications industrielles. La plage de température ambiante est comprise entre -25°C et +45°C.
Altitude maxi: 1000m au-dessus du niveau de la mer.

Mesures de sécurité
Les moteurs doivent être installés et utilisés uniquement par un personnel compétent et qualifié, possédant une connaissance parfaite des régles de sécurité applicables.

Les équipements de sécurité nécessaires pour la prévention des accidents lors de l'installation et l'exploitation doivent satisfaire à la réglementation en vigueur.

ATTENTION!
Les moteurs de petites dimensions dont l'alimentation en courant est directement commutée par des interrupteurs thermiques peuvent démarrer automatiquement.

Important:
- Ne montez jamais sur le moteur
- L'enveloppe du moteur peut être très chaude, même en phase d'exploitation normale.
- Certains types de moteurs spéciaux nécessitent des instructions spécifiques (par exemple pour alimentation par convertisseur de fréquences.

Manutention

Entreposage
L'entreposage du moteur doit se faire dans un local intérieur, sec, non poussiéreux et n'étant pas exposé à des vibrations.

Les surfaces du moteur non protégées (extrémités d'arbres et brides) doivent être recouvertes d'une couche de protection anti-corrosion.
Faites tourner de temps en temps manuellement l'arbre pour éviter tout déplacement de lagraisse.

Les résistances de réchauffage, si installées, doivent être mises sous tension.

Les condensateurs électrolytiques qui équipent éventuellement les moteurs monophasés devront être "reformés" suite à une période d'entreposage comprise entre 1 et 2 ans. Contactez Svend Høyer A/S pour de plus amples détails.

Installation

Fondation
L'acquéreur aura l'entière responsabilité pour la préparation de la fondation.

Les supports métalliques devront être recouverts d'une peinture anti-corrosion.

La surface de la fondation doit être suffisamment solide et rigide afin de pouvoir supporter d'éventuelles contraintes en cas de court-circuit. La fondation doit être dimensionnée de manière à éviter toute vibration dûe à la résonance.

Fixation sur la fondation
Boulonnez les tiges filetées sur les pattes du moteur et placez des cales de 1 à 2 mm d'épaisseur entre les pattes et les tiges filetées.

Veillez à ce que l'alignement soit réalisé selon les procédures adéquates.

Scellez ensuite les tiges filetées avec du béton, contrôlez l'alignement et percez des trous pour les goupilles de positionnement.

Orifices de vidange
En cas de disposition de montage non standard, vérifiez si les orifices de vidange sont bien orientés vers le bas.
Les moteurs livrés avec des bouchons en plastique pour orifices de vidange sont en position ouverte lors de la livraison.
Fermez bien l'ensemble des orifices en présence d'une ambiance très poussiéreuse.

Positionnement
Un positionnement correct permet d'éviter toute détérioration des paliers et toute autre vibration pouvant entraîner une rupture d'extrémité d'arbre.

Raccordement
Normalement, le moteur standard est livré avec des entrées de câbles sur chaque côté et une boîte à bornes sur le dessus.
Les moteurs sont disponibles soit avec une boîte à bornes orientable dans les 4 directions (4x90) soit avec des boîtes à bornes latérales.

La description de ces différentes solutions se trouve dans les catalogues produits.

Fermées les entrées de câbles non utilisées.

Outre les bornes des enroulements et de la terre, la boîte à bornes peut aussi contenir des points de raccordement pour thermistances, résistances de réchauffage, des contacts bimétalliques ou des éléments de résistance PT 100.

ATTENTION!
La boîte à bornes peut être maintenue sous tension, même si le moteur est hors circuit, pour l'alimentation des résistances de réchauffage ou le réchauffage direct des enroulements.

Les schémas de raccordement des auxiliaires sont à l'intérieur du couvercle de la boîte à bornes.

ATTENTION!
Le condensateur des moteurs monophasés peut conserver une charge résiduelle au niveau des bornes du moteur, même si celui-ci est à l'arrêt.

Assemblage et démontage

Important
Démontage et assemblage doivent uniquement être effectués par un personnel compétent et qualifié, utilisant un outillage adapté et en suivant les procédures de travail méthodiques.

Paliers
Toute intervention au niveau des paliers demande des précautions extrêmes. Utilisez des extracteurs pour les extraire et remontez-les après chauffage ou en utilisant un outillage spécial.

Montage des demi-accouplements et des poulies
Le montage des demi-accouplements et des poulies doit se réaliser au moyen d'un équipement et d'un outillage appropriés pour ne pas endommager les paliers.

Ne tapez jamais sur un demi-accouplement ou une poulie avec un marteau lors du montage ou du démontage et n'exercer jamais une pression levier contre le corps du moteur.

Équilibrage
Le rotor du moteur est équilibré dynamiquement.

En version standard, l'équilibrage a été fait au moyen

Maintenance et l[illegible]ation

Vérifications de maintenance courante

- vérifiez le moteur à intervalles réguliers.
- gardez le moteur propre, la circulation de l'air doit être libre.
- contrôlez l'état des joints d'étanchéité de l'arbre (par ex. joint en V), remplacez-les si besoin.
- Vérifiez les raccordements et les boulons de montage et d'assemblage.
- Contrôlez l'état des paliers afin de déceler tout bruit anormal, mesurez le niveau de vibration, la température des paliers, inspectez l'huile décomposée et le monitorage SPM des paliers.

"En cas de changement quelconque, démontez le moteur, vérifiez les pièces et remplacez-les si nécessaire."

Lubrification

Moteurs équipés de paliers graissés à vie

Les moteurs avec dimension de châssis jusqu'à 200 sont normalement dotés de paliers graissés à vie de type 2RS.
Les types de paliers sont décrits dans les catalogues produits correspondants.

Les moteurs dotés de paliers de type 2RS peuvent être graissés à nouveau en ouvrant le moteur, puis en nettoyant les paliers ainsi que les logements de paliers afin de les remplir de graisse neuve à une hauteur d'environ 50 à 70%.

Intervalles moyens pour lubrification:
Toutes les 20.000 – 40.000 heures d'exploitation pour les moteurs > 4 pôles.
Toutes les 10.000 – 20.000 heures d'exploitation pour les moteurs 2 et 2/4 pôles.

Des intervalles plus rapprochés sont nécessaires pour des dimensions de châssis supérieures.

Moteurs équipés de graisseurs

Laissez le moteur en rotation pour effectuer la lubrification.

Ouvrez momentanément les bouchons des orifices de sortie de graisse pour une lubrification périodique ou laissez-les ouverts pour une lubrification automatique.
Au cas où le moteur possède une plaque comportant des informations pour la lubrification, suivez celles-ci.
Sinon, utilisez le tableau des valeurs ci-dessous.

Dimension	Quantité	3600	3000	1800	[illegible]	1000	500-900
Châssis	Graisse (g)	tr/min	tr/min	tr/min	tr/min	tr/min	tr/min
Roulements à billes							
Intervalles de graissage en heures de service							
112, 132	15	4200	4800	7000	7800	10000	10500
160, 180	20	3200	4200	6000	7000	9000	10000
200, 225	25	1800	3100	5500	6500	8500	9000
250, 280	35	800	2000	5000	6000	8000	8500
315	50	800	2000	4600	5500	7500	8000
355	60	-	1000	4000	5000	7000	8000
Roulements à billes							
Intervalles de graissage en heures de service							
200, 225	25	900	1500	4300	5000	6500	7000
250, 280	35	400	1000	3300	4500	6300	6800
315	50	400	1000	2700	3800	6000	6500
355	60	-	-	2200	3200	5500	6000

Les valeurs contenues dans le tableau ci-dessus s'appliquent à des moteurs horizontaux.

Les intervalles de lubrification seront divisés par deux pour des moteurs verticaux.
Les quantités de graisse spécifiées dans le tableau ci-dessus correspondent à des apports de graisse neuve réalisés dans les intervalles mentionnés.

Les valeurs du tableau sont basées sur une température de paliers de 80°C. Les valeurs devront être divisées par deux pour chaque augmentation de 15 K de la température des paliers.

Si la température des paliers maximale est de 70°C, les valeurs du tableau peuvent être multipliées par deux.

ATTENTION!
Ne dépassez jamais la température maximale d'exploitation de la graisse et des paliers.

Une exploitation demandant des vitesses de rotation plus élevées, par exemple dans le cas d'applications avec convertisseurs de fréquence, ou une vitesse réduite avec une charge élevée, nécessitera des intervalles de lubrification plus rapprochés. Dans ce cas, n'hésitez pas à contacter Svend Høyer A/S.

En règle générale, un doublement de la vitesse impliquera une réduction d'environ 40% des intervalles de lubrification contenus dans le tableau précédent.

Vérifiez toujours si les paliers employés sont adaptés pour des vitesses d'exploitation élevées.

Lubrifiants

Pour la lubrification, utilisez uniquement des graisses spéciales pour roulements à billes possédant les propriétés suivantes:

- graisse de qualité supérieure à base de lithium ou de lithium complexe.
- viscosité de l'huile de base comprise entre 140 cSt à 40°C.
- consistance (échelle NLGI) 2 ou 3
- températures d'exploitation de -30°C à 120°C en continu.

Les types de graisses ayant les propriétés énoncées sont proposés par les principaux fabricants de lubrifiants.

Toutefois si la fabrication d'une huile [illegible] modifiée et que la compatibilité en est incertaine pour votre type d'application; effectuez plusieurs lubrifications à intervalles rapprochés afin de pouvoir évacuer la graisse souillée.

Les paliers rotatifs soumis à de fortes charges et / ou tournant à basses vitesses exigent des graisses de qualité EP (Extrême Pression).

Si les intervalles de lubrification sont rapprochés en raison d'une température de paliers de 80°C ou supérieure, utilisez un type de graisse pour haute température permettant des températures de paliers supérieures d'environ 15 K.

Si la température ambiante reste inférieure à -25°C, n'hésitez pas à consulter Svend Høyer A/S afin d'obtenir des renseignements concernant l'utilisation des graisses pour basses températures.

ATTENTION!
De nombreuses graisses représentent des risques d' irritation de la peau et d'inflammation au niveau des yeux. Nous vous prions de bien vouloir respecter impérativement les précautions d'utilisation précisées par le fabricant.

Pièces de rechange

Pour toute commande de pièces de rechange, n'oubliez pas de mentionner la désignation complète du type de moteur ainsi que les indications concernant le produit figurant sur la plaque signalétique. Au cas où le moteur possède un numéro de série, celui-ci devra également être fourni.

Instrucciones del motor

Declaración de conformidad

La Declaración de conformidad según la Directiva de baja tensión 73/23/CEE modificada por la Directiva 93/68 CEE se extiende por separado para algunos motores.

La Declaración de conformidad también debe cumplir los requisitos de una Declaración de Incorporación según la Directiva de Máquinas 89/392/CEE.

Validez

Las instrucciones valen por los siguientes motores eléctricos de Svend Høyer A/S que están en servicio:

Motor de aluminio	MS 56-132
Motor fundido	Y90-355

(Puede requerirse más informaciones para ciertos tipos de motores en consecuencia de su aplicación especial y/o su construcción).

Activación del motor

Traspaso
Inmediatamente después de la recepción, el motor debe ser examinado por daños exteriores. Si está dañado, el transportista debe ser informado enseguida.

Todas las informaciones de las placas de marca deben ser controladas, especialmente la conexión de tensión y devanado (estrella o triángulo).

De vueltas al eje con la mano para controlar si gira sin impedimentos.

Control de la resistencia del aislamiento
La resistencia del aislamiento debe ser medida antes de la puesta a en marcha y en caso de sospecha de humedad en el devanado.

La resistencia medida a 25° C debe superar el valor de referencia, es decir:

RI [MΩ]≥ (20 · U) / (1000 + 2P),

donde U = tensión en voltios y P = efecto desprendido en kW

ADVERTENCIA
Los devanados deben ser descargados inmediatamente después de la medición para evitar el riesgo de choque eléctrico.

El valor de referencia de la resistencia del aislamiento se reduce a la mitad por cada subida de 20° C de la temperatura de ambiente. Si el valor de referencia de la resistencia no se alcanza, el devanado es demasiado húmedo y debe ser secado en un horno. La temperatura del horno debe ser 90° C durante 12 a 16 horas y luego 105° C durante 6 a 8 horas.

Si el motor cuenta con tornillos de drenaje, deben ser

Los devanados normalmente deben devanarse de nuevo, si son mojados por agua de mar.

Arranque directo o por estrella/triángulo
La caja de bornes de los motores de una sola velocidad normalmente contiene 6 bornes devanados y por lo menos un borne de tierra.

La conexión a tierra debe ser efectuada de conformidad con las prescripciones locales, antes de conectar el motor a la tensión de alimentación.

La tensión y la conexión se desprenden de la placa de marca.

Arranque directo
Se pueden aplicar conexiones de devanado Y o Δ, por ejemplo 660 VY, 400 V Δ, donde Y indica la conexión a 660 V y Δ la conexión a 400 V.

Arranque por estrella/triángulo (Y/Δ)
La tensión de alimentación debe ser igual a la tensión de la marca del motor en la conexión Δ. Quitar todas las conexiones de la hilera de bornes.

Los motores especiales o los motores de dos velocidades deben cumplir las instrucciones en la caja de bornes.

Bornes y dirección de rotación
La dirección de rotación es en el sentido de las agujas del reloj, cuando se observa la superficie del eje al extremo del piñón del motor, y cuando la secuencia de fases de línea L1, L2 y L3 está conectada a los bornes, mostrados en el plano adjuntado.

La dirección y la rotación se alternan cambiando las dos líneas de conexión a la red.

Si el motor cuenta con un ventilador de una vía, es necesario controlar si la dirección de rotación es la que indica la flecha del motor.

Aplicación

Ambiente de operación
El motor ha sido calculado para aplicación en ambientes industriales.
Los límites de la temperatura de ambiente normal son -25° C a +40° C.
Altura máxima encima del nivel del mar: 1000 m.

Medidas de seguridad
El motor debe ser instalado y manejado por personal calificado que conoce los requisitos de seguridad correspondientes.

Los equipos de seguridad necesarios para la prevención de accidentes en el lugar de montaje y de operación deben ser procurados de conformidad con las prescripciones normalmente vigentes en el país respectivo.

ADVERTENCIA
Los pequeños motores, cuya alimentación de corriente es conectada directamente mediante conmutadores termosensibles, pueden arrancar automáticamente.

Importante
- No se permite subir al motor
- La casa del motor puede estar muy caliente, incluso durante la marcha normal
- Ciertas aplicaciones especiales del motor requieren instrucciones especiales (por ejemplo la aplicación de un conmutador de frecuencias)

Manejo

Conservación
Todos los motores deben guardarse dentro bajo condiciones secas y libres de vibraciones y polvo.

Una mano de anticorrosivo debe aplicarse a las superficies de los motores sin proteger (extremos del eje y bridas del eje). Se recomienda girar el eje manualmente a intervalos regulares para impedir el desplazamiento de grasa.

Es preferible que estén activados los elementos de calefacción, si los hay, para la prevención de agua de condensación.

Montaje

Asiento.
El comprador tiene la plena responsabilidad del establecimiento del asiento.

Los asientos de metal deben pintarse para evitar la corrosión.

El asiento debe ser derecho y suficientemente sólido para resistir las fuerzas de cortocircuito, en su caso. El asiento debe ser construido de tal manera que se impidan las vibraciones causadas por resonancia.

Espárragos de asiento
Los espárragos de asiento se empernan a los pies del motor, y un espaciador de 1-2 mm se coloca entre el espárrago y el pie.

Coloque el motor a nivel tomando las medidas necesarias..

Aplique cemento a los espárragos, controle el nivel de burbuja y perfore agujeros para la colocación de los espárragos.

Orificios de drenaje
Si la designación de montaje desvía de la norma, es necesario controlar que los orificios de drenaje son de arriba para abajo. En ambientes muy polvorosos todos los orificios de drenaje deben estar cerrados.

Montaje
Es imperativo evitar problemas con cojinetes, vibraciones y prolongaciones de ejes quebradas, en su caso.

Conexión
La construcción normal del motor es con entradas de cables en ambos lados y con caja de bornes en la parte superior. Unos motores se adquieren con cajas de bornes montados en la parte superior, que pueden ser giradas 4 x 90, y otros con cajas de bornes montadas en el

Si las entradas de cables no se usan, deben cerrarse.

Además del devanado principal y el borne a tierra, la caja de bornes también puede contener conexiones para termistores, elementos de calefacción para usar con el motor parado, conmutadores bimetálicos o sensores de resistencia PT 100.

ADVERTENCIA
Cuando el motor está parado, la tensión a los elementos de calefacción o al calentamiento directo del devanado, puede ser conectada en la caja de bornes.

ADVERTENCIA
El condensador de los motores monofásicos puede seguir siendo conductor de corriente a través de los bornes de los motores, aunque el motor esté parado.

Montaje y desmontaje

Importante
Este trabajo debe ser efectuado por personal calificado mediante herramientas aptas y métodos de trabajo apropiados.

Cojinetes
Hay que tener cuidado especial con los cojinetes. Los cojinetes deben quitarse con extractores y montarse por calentamiento o aplicación de herramientas especiales.

Montaje de semiacoplamientos y poleas de transmisión
Los semiacoplamientos y las poleas de transmisión deben montarse mediante equipos y herramientas aptas, que no dañen los cojinetes.

Nunca debe montar los semiacoplamientos y las poleas de transmisión golpeándolas a su sitio o quitándolas con una palanca para elevar oprimida contra el cuerpo del motor.

Equilibrio

El rotor del motor está dinámicamente equilibrado.

De serie, el equilibrado se efectúa mediante una ranura entera.

Mantenimiento y engrase

Control ordinario
- Controle el motor a intervalos regulares
- Mantenga el motor limpio y cuide de que haya libre flujo de aire de ventilación
- Controle el estado de los retenes del eje (por ejemplo del anillo V) y cambiélos si resulta necesario
- Controle el estado de las conexiones y de los pernos de montaje y de ensambladura
- Para controlar el estado de los cojinetes, escuche si hay ruidos extraordinarios, mide las vibraciones y la temperatura del cojinete, o controle la grasa lubricante usada o los cojinetes SPM
  modifican, el motor debe desmontarse y sus componentes controlarse. Cambiar si es necesario."

Lubricación

Motores con cojinetes engrasados de por vida
Normalmente, los motores con casas de dimensiones hasta 200 van dotados de cojinetes engrasados de por vida del tipo 2RS. Los tipos de cojinetes se describen en los catálogos de productos respectivos.

Para reengrasar los motores con cojinetes 2RS, abrir el motor, limpiar los cojinetes y las cajas de los cojinetes, y luego proveerlos de nueva grasa hasta un nivel de aprox. 50-70%.

Intervalos de lubricación instructivos:
20.000 – 40.000 horas de servicio para motores de >4 polos.
10.000 – 20.000 horas de servicio para motores de 2- y 2/4 polos.
Los intervalos más cortos rigen para las casas de motores grandes.

Motores con boquillas engrasadoras
El motor debe ser engrasado, mientras que esté en marcha.

Si el motor cuenta con tornillo de drenaje, éste debe ser quitado provisionalmente durante el engrase y permanentemente para el engrase automático.

Si el motor cuenta con placa de instrucción de engrase, los valores de esta deben seguirse, si no, se siguen los valores abajo indicados.

Casa del motor, dimensión	Grasa, cantidad (g)	3600 rpm	3000 rpm	1800 rpm	1500 rpm	1000 rpm	500-900 rpm
Cojinetes de bolas							
Intervalos de lubricación según la cantidad de horas de servicio							
112, 132	15	4200	4800	7000	7800	10000	10500
160, 180	20	3200	4200	6000	7000	9000	10000
200, 225	25	1800	3100	5500	6500	8500	9000
250, 280	35	800	2000	5000	6000	8000	8500
315	50	800	2000	4600	5600	7500	8000
355	60	-	1000	4000	5000	7000	8000
Cojinetes de rodamientos							
Intervalos de lubricación según la cantidad de horas de servicio							
200, 225	25	900	1500	4300	5000	6500	7000
250, 280	35	400	1000	3300	4500	6300	6800
315	50	400	1000	2700	3800	6000	6500
355	60	-	-	2200	3200	5500	6000

La tabla ha sido elaborada para los motores montados horizontalmente.
Los intervalos de lubricación de los motores verticales son la mitad de los valores arriba indicados.

La cantidad de grasa indicada en la tabla debe ser aplicada, si pequeñas cantidades de grasa lubricante fresca se cambian a los intervalos arriba indicados.
Los valores de la tabla se basan en una temperatura del cojinete de 80° C. Los valores deben ser reducidos a la mitad por cada subida de 15 K de la temperatura del cojinete.

Si la temperatura máxima del cojinete es 70° C, los valores de la tabla pueden ser duplicados.

ADVERTENCIA
La temperatura máxima de servicio para grasa lubricante y cojinetes no debe ser excedida.

Los intervalos de lubricación cortos se requieren en los casos de servicio a velocidades altas, por ejemplo en conexión con la aplicación del conmutador de frecuencias, o a velocidades bajas con cargas grandes. En tales casos debe contactar a Svend Høyer A/S para más informaciones.

La duplicación de la velocidad normalmente significa que los intervalos de lubricación deben ser reducidos a aprox. 40% de los valores, indicados en la tabla arriba mencionada.

También es necesario controlar, si los cojinetes son aptos para la marcha a velocidad alta.

Lubricante
Para la lubricación se debe aplicar grasa especial para cojinetes de bolas con las siguientes características:
- Grasa de litio o grasa de complejo de litio de una buena calidad
- Viscosidad del aceite crudo 100-140 cST a 40° C
- Consistencia NLGI grado 2 o 3
- Ambito de temperatura -30° C - +120° C, continua

La grasa con las características correctas se consigue con todos los fabricantes grandes de lubricantes.

En caso de cambio a otra marca de grasa y la consiguiente inseguridad de la compatibilidad, hay que aplicar grasa más veces a intervalos más cortos para cambiar la grasa vieja.

En caso de cojinetes fuertemente cargados y/o de rotación lenta, se debe aplicar grasa EP.

En caso de intervalos de lubricación cortos en consecuencia de una temperatura del cojinete de 80° C o más, se debe aplicar una grasa para altas temperaturas, que normalmente permite unas temperaturas del cojinete de aprox. 15 K más.
Si la temperatura del ambiente es debajo de -25° C se debe contactar a Svend Høyer A/S para más informaciones sobre la posibilidad de una grasa para bajas temperaturas.

ADVERTENCIA
Muchas grasas pueden causar irritación de la piel e inflamación del ojo.
Por esto se deben seguir todas las prescripciones de seguridad del fabricante.

Piezas de repuesto
El pedido de piezas de repuesto debe mencionar todas las designaciones y códigos de productos, que indica la placa de marca. Si el motor cuenta con un número de serie, debe incluirlo también.

Istruzioni

Dichiarazione di conformità

Dichiarazioni di conformità nel rispetto della Direttiva Bassa Tensione 73/23/EEC e emendata dalla Direttiva 93/68 EEC devono essere emesse separatamente per ogni macchina/motore.

La Dichiarazione di Conformità soddisfa anche i requisiti del Certificato di Incorporazione nel rispetto della Direttiva Macchinari 89/392/EEC.

Validità

Le istruzioni sono valide per i seguenti tipi di macchine elettriche Høyer, utilizzate come motori:

Motori in alluminio	MS 56-132
Motori in ghisa	Y90 – 355

(Informazioni aggiuntive possono essere necessarie per alcuni tipi di motori nel caso di speciali applicazioni e/o progettazioni).

Avviamento del motore

Controllo al ricevimento
Ispezionare immediatamente il motore al ricevimento per verificare che non abbia subito danni; se si dovessero riscontrare danneggiamenti, contestarli subito allo spedizioniere.

Controllare tutte le caratteristiche elencate sulla targhetta, specialmente la tensione ed il tipo di collegamento (stella o triangolo).

Far girare a mano l'albero per verificare che giri liberamente e rimuovere eventuali bloccaggi usati per il trasporto.

Controllo della resistenza di isolamento.
Controllare la resistenza d'isolamento prima della messa in servizio e quando si sospetti una formazione di umidità negli avvolgimenti.

La resistenza, misurata a 25° C, deve eccedere il valore di riferimento, e cioè:

$Ri\ [M\Omega] \geq (20 \cdot U) / (1000 + 2P)$

dove U = tensione in V; P = potenza in kW

AVVERTENZA
Gli avvolgimenti devono essere scaricati immediatamente dopo la misura per evitare rischi di shock elettrici.

Il valore di riferimento della resistenza d'isolamento viene dimezzato ogni 20°C di aumento di temperatura ambiente.
Se il valore di riferimento della resistenza non può essere ottenuto, l'avvolgimento è troppo umido e deve essere essicato in forno. La temperatura del forno deve essere di 90°C per 12-16 ore e successivamente di 105°C per 6-8 ore.

I tappi dei fori di scarico condensa devono essere rimossi durante l'essicamento.
Se gli avvolgimenti sono rimasti immersi in acqua di mare, normalmente devono essere rifatti.

Avviamento diretto oppure avviamento stella-triangolo
La scatola morsetti su motori standard a velocità singola contiene normalmente 6 terminali e almeno un morsetto di terra.

La messa a terra deve essere effettuata in accordo alle legislazioni locali prima del collegamento del motore alla rete.

La tensione ed il collegamento sono stampigliati sulla targhetta del motore.

Avviamento diretto
Sia il collegamento Y che Δ possono essere utilizzati; per esempio 660 VY, 400 VΔ indica che il motore può essere collegato a stella per 660 V ed a triangolo per 400 V.

Avviamento stella/triangolo (Y/Δ):
La tensione di linea deve essere uguale alla tensione nominale del motore in collegamento-Δ.
Togliere tutte le piastrine di collegamento dai terminali.

Per il collegamento di motori a doppia velocità e speciali seguire le istruzioni riportate all'interno della scatola morsetti.

Terminali e senso di rotazione
Il senso di rotazione è orario visto dal lato comando, quando la sequenza di fase L1, L2, L3 è collegata ai terminali come indicato nella figura qui allegata.

Per invertire la direzione di rotazione, scambiare tra loro i collegamenti di due terminali qualsiasi.

Se il motore ha una ventola unidirezionale, controllare che la direzione di rotazione sia in accordo alla freccia posta sul motore.

Uso

Condizioni di funzionamento
I motori sono previsti per utilizzo in applicazioni industriali.
I limiti di temperatura ambiente sono -25°C +40°C. L'altitudine massima è 1000 metri slm.

Considerazioni riguardanti la sicurezza
Il motore deve essere installato ed utilizzato da personale qualificato, che sia a conoscenza dei requisiti di sicurezza.

Le attrezzature antinfortunistiche necessarie alla prevenzione di incidenti durante il montaggio e il funzionamento del motore sull'impianto devono essere in accordo alle regole vigenti nel paese.

AVVERTENZA
Piccoli motori collegati direttamente alla rete tramite interruttori termici possono avviarsi automaticamente.

Importante
- Il motore non deve essere utilizzato per funzionamento ad impulsi
- la temperatura della carcassa del motore può essere estremamente calda durante il funzionamento
- alcune applicazioni speciali richiedono istruzioni speciali (per es. alimentazione a mezzo inverter)

Gestione

Immagazzinaggio
Tutti i motori devono essere immagazzinati in luogo coperto, asciutto, privo di vibrazioni e di polvere.

Le superfici non protette del motore (estremità d'albero e flange) devono essere trattate con vernice di protezione anticorrosiva.
Si raccomanda di ruotare a mano periodicamente l'albero per prevenire migrazioni di lubrificante.

Le scaldiglie anticondensa, se esistenti, devono essere preferibilmente tenute sotto tensione.

Le caratteristiche di condensatori elettrolitici, se montati su motori monofase, devono essere ripristinate dopo periodi di immagazzinaggio superiori a 1-2 anni. Pe maggiori dettagli contattare Svend Høyer A/S.

Installazione

Fondazione
L'acquirente ha piena responsabilità per la preparazione delle fondazioni.

Le fondazioni metalliche devono essere verniciate per evitare la corrosione.

Le fondazioni devono essere in piano e sufficientemente rigide per sopportare eventuali sollecitazioni da corto circuito. Devono essere dimensionate in modo da evitare l'insorgenza di vibrazioni dovute a risonanza.

Bulloni di fondazione
Inserire i bulloni di fondazione nei piedi del motore e collocare uno spessore di 1-2 mm. tra il bullone ed il piede.

Allineare il motore con l'uso di strumenti adatti.

Fare una gettata di calcestruzzo, controllare l'allineamento e praticare i fori necessari per le spine di centraggio.

Fori di scarico condensa
Controllare che i fori di scarico condensa siano aperti e rivolti verso il basso se l'installazione è diversa da quella standard.
I motori con fori richiudibili con tappi in plastica sono consegnati con i tappi in posizione aperta.
In ambienti molto polverosi tutti i fori di scarico condensa devono essere tenuti chiusi.

Allineamento
Un corretto allineamento è indispensabile per prevenire guasti ai cuscinetti, vibrazioni e possibili rotture delle estremità dell'albero.

Collegamento
I motori in versione standard hanno la scatola morsetti situata sulla sommità del motore, con ingresso cavi su entrambi i lati.
Alcuni motori possono essere forniti, in alternativa, con la scatola morsetti montata sulla sommità del motore orientabile 4(90 oppure con la scatola morsetti montata lateralmente.

La disponibilità di queste versioni alternative è illustrata sul catalogo di prodotto.

Gli ingressi cavi non utilizzati devono essere chiusi.

Oltre ai terminali dell'avvolgimento e di terra, la scatola morsetti può contenere le connessioni per termistori, scaldiglie, bimetalli o termoresistenze PT100.

AVVERTENZA
Durante le fermate, all'interno della scatola morsetti può essere presente tensione utilizzata per alimentare le scaldiglie o direttamente l'avvolgimento per tenerlo in temperatura.

Gli schemi di collegamento per circuiti ausiliari si trovano all'interno del coperchio della scatola morsetti.

AVVERTENZA
Il condensatore in motori monofase può rimanere caricato tenendo in tensione i morsetti, anche quando il motore è ormai fermo.

Assemblaggio e smontaggio

Importante
Assemblaggio e smontaggio devono essere effettuati da personale qualificato, utilizzando strumenti e metodi di lavoro adatti.

Cuscinetti
I cuscinetti abbisognano di cure speciali. Devono essere smontati con l'uso di estrattori e montati a caldo o con l'uso di strumenti adatti.

Montaggio di semigiunti e pulegge
Semigiunti e pulegge devono essere montati solo con l'utilizzo di strumenti adatti, che non danneggino i cuscinetti.

Non usare mai un martello per montare un semigiunto o una puleggia e non usare mai una leva infulcrata contro il corpo del motore per rimuoverli.

Bilanciatura

Il rotore del motore è bilanciato dinamicamente.

Nei motori standard, la bilanciatura è effettuata con chiavetta intera.

Manutenzione e lubrificazione

Ispezione generale
- Ispezionare il motore a intervalli regolari
- mantenere il motore pulito e assicurare buona ventilazione
- controllare le condizioni di anelli di tenuta sull'albero
- controllare le condizioni delle connessioni e dei bulloni di fissaggio e fondazione
- controllare le condizioni del cuscinetti, prestando attenzione ad eventuali rumori anomali, alle vibrazioni, alla temperatura, analizzando il grasso consumato ed effettuando monitoraggi con rilevatori SPM, dove esistenti.

"Quando si rilevino condizioni anomale, smontare il motore, controllarne le parti ed effettuare le sostituzioni necessarie."

Lubrificazione
Motori con cuscinetti ad ingrassaggio permanente.
I motori fino alla grandezza 200 sono normalmente forniti con cuscinetti ad ingrassaggio permanente del tipo 2RS.
I tipi di cuscinetti montati sono specificati nei rispettivi cataloghi di prodotto.

I motori equipaggiati con cuscinetti tipo 2RS possono essere reingrassati smontando il motore, pulendo i cuscinetti ed i loro alloggiamenti e riempendo con nuovo grasso per il 50-70%.

Indicazioni degli intervalli di lubrificazione sono:
20.000 - 40.000 ore di servizio per motori a 4 poli e oltre.
10.000 - 20.000 ore di servizio per motori a 2 poli e 2/4 poli.
I tempi più brevi si riferiscono ai motori delle grandezze maggiori.

Motori forniti con ingrassatori
Procedere alla lubrificazione del motore quando è in funzione.

Nel caso sia previsto un tappo sullo scarico grasso, rimuoverlo temporaneamente durante la lubrificazione manuale o definitivamente se si utilizzano dispositivi automatici.

Se il motore é previsto di targhetta riportante le istruzioni per la lubrificazione, seguire i valori indicati, altrimenti attenersi ai seguenti valori:

grandezza motore	quantità di grasso (g)	3600 r/min	3000 r/min	1800 r/min	1500 r/min	1000 r/min	500-900 r/min
Cusacinetti a sfere							
Intervalli di lubrificazione in ore di esercizio							
112, 132	15	4200	4800	7000	7800	10000	10500
160, 180	20	3200	4200	6000	7000	9000	10000
200, 225	25	1800	3100	5500	6500	8500	9000
250, 280	35	800	2000	5000	6000	8000	8500
315	50	800	2000	4600	5500	7500	8000
355	60	-	1000	4000	5000	7000	8000
Cuscinetti a rulli							
Intervalli di lubrificazione in ore di esercizio							
200, 225	25	900	1500	4300	5000	6500	7000
250, 280	35	400	1000	3300	4500	6300	6800
315	50	400	1000	2700	3800	6000	6500
355	60	-	-	2200	3200	5500	6000

La tabella si riferisce ai motori montati orizzontalmente. Gli intervalli di lubrificazione per motori montati verticalmente sono la metà dei valori in tabella.

condizione che vengano aggiunte piccole quantità di grasso nuovo ad intervalli regolari, come indicato sopra.
I valori in tabella si riferiscono ad una temperatura del cuscinetti di 80°C. Tali valori devono essere dimezzati ogni 15K di aumento della temperatura dei cuscinetti.

Se la temperatura massima dei cuscinetti è di 70°C, i valori in tabella possono essere raddoppiati.

AVVERTENZA:
La temperatura massima di esercizio del grasso e dei cuscinetti non deve essere superata.

Il funzionamento a velocità superiori, per esempio nel caso di alimentazione tramite inverter, o a velocià inferiori, per carichi pesanti, necessitano di intervalli di lubrificazione ravvicinati. In tali casi, consultare Svend Høyer A/S.

Indicativamente, un raddoppio della velocità richiede una riduzione degli intervalli di lubrificazione di circa il 40% dei valori riportati in tabella.

Inoltre, si deve sempre verificare che i cuscinetti siano adatti alla rotazione ad alte velocità.

Lubrificanti
Per il reingrassaggio, utilizzare solo lubrificanti specifici per cuscinetti a sfere, con le seguenti proprietà:
- grasso con base al litio di buona qualità o composto a base di litio
- viscosità dell'olio di base 100 – 140 cST a 40°C
- consistenza NLGI grado 2 o 3
- gamma di temperature -30°C +120°C, continuativa.

Lubrificanti con le corrette proprietà sono disponibili presso i maggiori produttori.

Se si cambia la marca del lubrificante e la compatibilità non è certa, lubrificare inizialmente i cuscinetti diverse volte ad intervalli molto brevi, con lo scopo di liberarli dai residui del precedente lubrificante.

Per cuscinetti a carico elevato e/o a rotazione lenta, si devono usare lubrificanti EP.

Nel caso di intervalli di lubrificazione molto breve perchè la temperatura dei cuscinetti è di 80°C o superiore, usare lubrificanti per alte temperature, i quali normalmente permettono una temperatura dei cuscinetti più alta di circa 15K.

Se la temperatura ambiente è inferiore a -25°C, consultare Svend Høyer A/S per verificare la possibilità di utilizzare grasso per basse temperature.

AVVERTENZA:
Molti tipi di lubrificanti possono causare irritazioni alla pelle o infiammazioni agli occhi.
Seguire le norme di sicurezza specificate dal produttore.

Parti di ricambio
Nell'ordinare parti di ricambio per un motore, indicare il tipo di motore con codice di prodotto come stampigliato sulla targhetta del motore stesso. Se sulla targhetta compare anche un numero di matricola del motore, è

Överenstämmelseförklaring

Överenstämmelseförklaring vidrörande lågspänningsdirektivet 73/23/EEC kompletterat med direktiv 93/68/EEC utfärdas separat med enskilda motorer.

Överenstämmelseförklaring täcker också kraven för en inbyggnadsdeklaration med avseende på maskindirektivet 89/392/EEC.

Giltighet

Instruktionerna gäller för följande el-motorer från Svend Höyer AB som är i drift:

Aluminiummotor	MS 56-132
Gjutjärnsmotor	Y90-355

(Ytterligare information kan vara ett krav för vissa motortyper som berör speciell användning och/eller av konstruktionsmässig hänsyn.)

Igångkörning

Ankomstkontroll
Omedelbart vid ankomsten skall motorn ses över så den inte har skadats under transporten. Om den skadats skall speditören underrättas om detta omedelbart.

All märkdata skall kontrolleras, speciellt spänning och koppling (Y, stjärna eller trekant).

Vrid axeln för hand för att kontrollera att den roterar obehindrat.

Avlägsna eventuell transportlåsning.

Kontroll av isolationsresistansen
Isolationsresistansen skall mätas före idrifttagning och då man kan misstänka att lindningarna blivit fuktiga.

Resistansen mätt vid 25° C skall vara större än referensvärdet, dvs:

RI [MΩ] ≥ (20 X U) / (1000 X 2P),

där U = spänning i volt, och P = uteffekt kW.

VARNING
Lindningarna skall omedelbart urladdas efter mätningen för att undgå risken för elektrisk chock.

Referensvärdet för isolationsresistansen halveras för var 20°C höjning av omgivningstemperaturen. Om referensresistansen inte kan uppnås är lindningen för fuktig och måste torkas i ugn. Ugnstemperaturen skall vara på 90°C i 12-16 timmar, och därefter på 105°C i 6-8 timmar.

Om det finns pluggar i dräneringshålen måste de tas ur under uppvärmningen.

Lindningar dränkta i havsvatten måste normalt omlindas.

Direktstart eller Y/Δ
Uttagslådan till en standard enhastighetsmotor innehåller normalt 6 lindningsuttag och minst ett jorduttag.

Motorn skall anslutas till jord enligt gällande bestämmelser innan den ansluts till nätet.

Spänning och koppling framgår av märkskylten.

Direktstart
Y eller Δ koppling kan nyttjas. T.ex. 660 VY, 400 VΔ anger Y-koppling för 660 V och Δ-koppling för 400 V.

Y/Δ-start
Nätspänningen måste vara lika med motorns märkspänning i Δ-koppling. Alla kopplingsbleck skall tas bort från plinten.

För specialmotorer och andra tvåhastighetsmotorer måste anslutningen till nätet följa anvisningarna i uttagslådan.

Uttag och rotationsriktning
Rotationsriktningen är medurs sett mot axeländan på drivsidan om nätfasorna L1, L2 och L3 ligger anslutna till uttagen som visas på bifogade ritning.

Rotationsriktningen ändras genom att växla plats på två av nätanslutningskablarna.

Om motorn är utrustad med en envägs-fläkt, skall det kontrolleras, om rotationsriktningen är som angivet med pilen på motorn.

Användning

Driftmiljö
Motorn är avsedd att användas i industrimiljöer.
Gränserna för normal omgivningstemperatur är -25°C till +40°C. Maximal höjd över havet är 1000 m.

Säkerhetsaspekter
Motorn skall installeras av kvalificerad personal som har kunskaper om erforderliga säkerhetskrav.

Den säkerhetsutrustning som är nödvändig för att hindra olyckor vid montering och användning skall användas i enlighet med landets lagar och förordningar.

VARNING
Var vänlig observera:
- Motorn skall inte användas att klättra på
- Temperaturen på motorns hölje kan kännas mycket hög vid beröring även under normal drift
- Vissa speciella drifter för motorer kräver speciella instruktioner (t.ex. frekvensomriktardrifter

Hantering

Förvaring
All lagring av motorer skall göras inomhus under torra, vibrations-och dammfria förhållanden.

Oskyddade bearbetade ytor (axeltappar och flänsar) skall täckas med rostskyddsmedel.

Evt. Värmeelement för att motverka kondensvatten skall helst vara aktiverade.

Uppställning

Fundament
Beställaren ansvarar för utförandet av fundamentet.

Metallfundament skall vara målade för att förhindra korrosion.

Fundamenten skall vara plana och tillräckligt stabila för att motstå kortslutningskrafterna. Fundamenten skall vara dimensionerade så att vibrationer inte uppstår på grund av egenfrekvens.

Fästklotsar
Skruva fast fästklossarna vid motorns fötter och placera en 1-2 mm mellanläggsplåt mellan klotsen och foten.

Rikta upp motorn med hjälp av en lämplig metod.

Gjut fast klotsarna med betong, kontrollera uppriktningen och borra hål för att fästa styrpinnar.

Dräneringshål
Om monteringssättet avviker från standard skall det kontrolleras att dräneringshål mynnar neråt. I extremt dammiga miljöer skall alla dräneringshål vara stängda.

Uppriktning
Det är nödvändigt att ha en korrekt uppriktning för att undvika lagerproblem, vibrationer och eventuellt axeltappsavbrott.

Anslutning

Normalt är motorn konstruerad med uttagslådan ovanpå motorn och med kabelanslutningsmöjligheter från båda sidorna. Vissa motorer kan levereras, som special, med roterbar, 4X90°, uttagslåda ovanpå motorn, och andra med sidomonterad uttagslåda.

Oanvända hål för kabelanslutning skall vara täckta.

Förutom anslutningar för huvudlindning och jord kan uttagslådan också innehålla anslutningar för termistorer, element för stilleståndsuppvärmning, temperaturvakter av bimetalltyp eller PT 100 motståndselement.

VARNING
Trots att motorn står stilla kan spänning finnas ansluten till uttagslådan för värme-element eller direkt värme i lindningen.

VARNING
Kondensatoren i enfasade motorer kan innehålla en laddning som ligger över motorns uttag trots att motorn står still.

Montering och demontering

Allmänt
Detta arbete måste utföras av kunnig personal som använder ändamålsenliga verktyg och arbetsmetoder.

Lager
Lager kräver speciell omsorg. Lager skall dras av med avdragare och sättas på med hjälp av uppvärmning eller med användning av specialverktyg.

Montering av kopplingshalvor och drivskivor
Kopplingshalvor och drivskivor skall monteras med hjälp av ändamålsenlig utrustning och verktyg som inte skadar lagren.

Montera aldrig en kopplingshalva eller en drivskiva genom att banka den på plats eller demontera dem genom att bända mot statorn.

Balansering
Motorns rotor är dynamiskt balancerad.

Balanseringen har som standard blivit utförd med hel kil.

Underhåll och smörjning

Allmänt underhåll
- Kontrollera motorn regelbundet
- Håll motorn ren och säkerställ fri tillgång till ventilationsluft
- Kontrollera axeltätningarnas tillstånd (t.ex V-ringen) och ersätt dem om det är nödvändigt
- Kontrollera nätanslutningarnas tillstånd och alla skruvar för uppställning och montage
- Kontrollera lagrens tillstånd genom att lyssna efter främmande ljud, vibrationsmätning, mäta fettet eller utnyttja SPM lagerövervakning
  "Om det uppträder ändringar i tillståndet så demontera motorn, kontrollera ingående delar och ersätt de delar som behöver ersättas".

Smörjning

Motorer med permanentsmorda lager
Motorer upp till storlek 200 är normalt monterade med permanentsmorda lager av typen 2RS. Lagertyperna framgår av respektive produktkatalog.

Motorer med 2RS lager eftersmörjes eftersom motorn öppnas, lager och lagerhus görs rena och nytt fett fylls på till en nivå på c:a 50-70 %.

Riktlinjer för omsmörjningsintervaller är:
20.000 – 40.000 driftstimmar för > 4-polsmotorer.
10.000 – 20.000 driftstimmar för < 2- och 2/4-polsmotorer.
De kortare tiderna gäller för större storlekar.

Motorer med smörjnipplar
Motorn skall smörjas medan den är i drift.

Om det finns en plugg i fettutloppet så skall denna tas bort under smörjningen. Vid automatisk smörjning avlägsnas den permanent.

Om motorn är försedd med en smörjskylt så skall denna följas. I annat fall kan följande värden användas.

Motor storlek	Mängd Fett (g)	3600 r/min	3000 r/min	1800 r/min	1500 r/min	1000 r/min	500-900 r/min
Kullager							
Smörjintervall i driftstimmar							
112, 132	15	4200	4800	7000	7800	10000	10500
160, 180	20	3200	4200	6000	7000	9000	10000
200, 225	25	1800	3100	5500	6500	8500	9000
250, 280	35	800	2000	5000	6000	8000	8500
315	60	800	2000	4600	5500	7500	8000
355	60	-	1000	4000	5000	7000	8000
Rullager							
Smörjintervall i driftstimmar							
200, 225	25	900	1500	4300	5000	6500	7000
250, 280	35	400	1000	3300	4500	6300	6800
315	60	400	1000	2700	3800	6000	6500
355	60	-	-	2200	3200	5500	6000

Tabellen är utarbetad för horisontellt monterade motorer.

Smörjintervallen för vertikalt monterade motorer är hälften av ovanstående värden.

Den fettmängd som är angiven i tabellen skall användas, om små mängder fett regelbundet ersätts med ovanstående intervall.

Tabellvärdena är baserade på en lagertemperatur på 80°C. Värdena skall halveras för var 15 K ökning i lagertemperaturen. Om maximala lagertemperaturen är 70°C kan tabellens värden fördubblas.

VARNING
Den maximala arbetstemperaturen för fett och lager får inte överskridas.

Kortare smörjintervaller krävs vid högvarvsdrift eller lägre varvtal vid stor last.

Vid en fördubbling av varvtalet krävs en minskning av smörjintervallen till omkring 40% av ovantående tabells värden.

Det skall också kontrolleras lagrens lämplighet för högvarvsdrift.

Lagerfett
Vid smörjning skall det användas speciellt kullagerfett med följande egenskaper.
- Litiumfett eller litiumkomplexfett av god kvalitet
- Råoljeviskositet 100-140 cST vid 40°C
- Konsistens NLGI grade 2 eller 3
- Temperaturområde -30°C - +120°C, kontinuerligt

Fett med de korrekta egenskaperna finns tillgängliga hos alla större fabrikanter av smörjmedel.

Om fettkvaliteten ändras och kompabiliteten är osäker så smörj åtskilliga gånger med korta mellanrum så att det gamla fettet ersätts.

Vid kraftig belastnig och/eller långsamt roterande lager skall det användas EP-fett.

Vid kortare smörjintervaller beroende på en lagertemperatur på 80°C eller däröver skall det användas högtemperaturfett, som normalt tillåter ca 15 K högre lagertem-

Om den omgivande temperaturen är under -25°C, skall Svend Höyer AB kontaktas angående eventuell användning av lågtemperaturfett.

VARNING
Många smörjmedel kan orsaka hudirritation och ögonbesvär. Följ därför alla fabrikanters säkerhetsföreskrifter.

Reservdelar
Vid beställning av reservdelar fodras alla de beteckningar och produktkoder, som är angivet på märketiketten. Om motorn är utrustad med ett serienummer, skall detta angivas.

Motorinstruktioner

Overensstemmelseserklæring

Overensstemmelseserklæring vedrørende lavspændingsdirektiv 73/23/EØF med ændringer i direktiv 93/68 EØF udstedes separat for enkelte motorer.

Overensstemmelseserklæringen skal også opfylde kravene i en indbygnings erklæring vedrørende maskindirektiv 89/392/EØF.

Gyldighed

Instruktionerne gælder for følgende el-motorer fra Svend Høyer A/S, som er i drift:

Aluminiumsmotor	MS 56-132
Støbt motor	Y90-355

(Yderligere informationer kan være påkrævet for visse motortyper som følge af særlig anvendelse og/eller af konstruktionsmæssige hensyn).

Aktivering af motor

Afleveringsforretning
Umiddelbart efter modtagelsen skal motoren ses efter for udvendig beskadigelse. Hvis den er beskadiget, skal speditøren øjeblikkeligt informeres.

Alle mærkepladeinformationer skal kontrolleres, især spændings- og viklingskobling (stjerne eller trekant).

Drej akslen rundt med hånden for at kontrollere, at den roterer uhindret.

Kontrol af isolationsmodstand
Isolationsmodstanden skal måles før ibrugtagning og ved mistanke om viklingsfugt.

Modstand målt ved 25° C skal være større end referenceværdien, dvs.:

RI [MΩ]≥ (20 · U) / (1000 + 2P),

hvor U = spænding i volt og P = afgivet effekt i kW

ADVARSEL
Viklinger bør aflades umiddelbart efter måling for at undgå risiko for elektrisk stød.

Referenceværdien for isolationsmodstanden halveres for hver stigning på 20° C i den omgivende temperatur. Hvis referencemodstandsværdien ikke opnås, er viklingen for fugtig og skal tørres i en ovn. Ovntemperaturen skal være på 90° C i 12-16 timer og derefter på 105° C i 6-8 timer.

Hvis motoren er forsynet med drænskruer, skal de fjernes under opvarmningen.

Viklinger skal normalt omvikles, hvis de bliver gennemvædet af havvand.

Direkte igangsætning eller stjerne/trekant-igangsætning
Klemkassen på motorer med én hastighed indeholder normalt 6 viklingsklemmer og mindst én jordklemme.

Jordingen skal udføres i henhold til lokale forskrifter, før motoren tilsluttes forsyningsspændingen.

Spænding og tilslutning er præget på mærkepladen.

Direkte igangsætning
Der kan anvendes Y- eller Δ-viklingskoblinger, f.eks. 660 VY, 400 V Δ, hvor Y angiver tilslutning til 660 V og Δ tilslutning til 400 V.

Stjerne/trekant-igangsætning (Y/Δ)
Spændingsforsyningen skal være lig med motorens mærkespænding i Δ-koblingen. Fjern alle koblingsforbindelser fra klemrækken.

Specialmotorer eller motorer med to hastigheder skal overholde instruktionerne i klemkassen.

Klemmer og omdrejningsretning
Omdrejningsretningen er med uret, når man ser på akselfladen ved enden af motordrevet, og når linjefasesekvensen L1, L2 og L3 er tilsluttet de klemmer, som er vist på vedlagte tegning.

Retning og rotation ændres ved at bytte om på de to net ledninger.

Hvis motoren er forsynet med en envejs-ventilator, skal det kontrolleres, om omdrejningsretningen er som angivet af pilen på motoren.

Anvendelse

Driftsmiljø
Motoren er beregnet til anvendelse i industrimiljøer. Grænserne for den normale omgivende temperatur er -25° C til +40° C. Maks. højde over havets overflade er 1000 m.

Sikkerhedsforanstaltninger
Motoren skal installeres og anvendes af kvalificeret personale, som er bekendt med de relevante sikkerhedskrav.

Det sikkerhedsudstyr, som er nødvendigt for forebyggelse af uheld på opstillings- og driftsstedet, skal fremskaffes i overensstemmelse med de forskrifter, som normalt gælder i det pågældende land.

ADVARSEL
Små motorer med en strømforsyning, som tilsluttes direkte ved hjælp af varmefølsomme omskiftere, kan starte automatisk.

Vigtigt
- Det er ikke tilladt at stå på motoren
- Motorhuset kan være meget varmt, også under normal drift
- Visse særlige motoranvendelser kræver særlige instruktioner (f.eks. anvendelse af frekvensomformer)

Håndtering

Opbevaring
Alle motorer skal opbevares inden døre under tørre, vibrations- og støvfri forhold.

Ubeskyttede motorflader (akselender og -flanger) bør påføres en korrosionsbestandig coating. Det anbefales jævnligt at dreje aksler rundt manuelt for at forhindre fedtvandring.

Evt. varmelegemer til forebyggelse mod kondensvand skal helst være aktiverede.

Installation

Fundament
Køberen bærer det fulde ansvar for etablering af fundamentet.

Metalfundamenter bør males for at undgå korrosion.

Fundamentet skal være lige og tilstrækkeligt solidt til at kunne modstå eventuelle kortslutningskræfter. Fundamentet skal være konstrueret, så vibrationer forhindres på grund af resonans.

Fundamenttapskruer
Bolt fundamenttapskruerne fast til motorfødderne og anbring et afstandsstykke på 1-2 mm mellem tapskrue og fod.

Bring motoren i vater ved at træffe de fornødne foranstaltninger.

Påfør tapskruerne cement, kontroller vater og bor huller til anbringelse af tapper.

Drænhuller
Hvis monteringsbetegnelsen afviger fra standarden, skal det kontrolleres, at drænhullerne vender nedad. I meget støvede omgivelser skal alle drænhuller være lukkede.

Opstilling
Det er altafgørende at undgå problemer med lejer, vibrationer og evt. knækkede akselforlængelser.

Tilslutning
Den normale motorkonstruktion er med kabelindgange på begge sider og med klemkasse øverst. Motorer fås med topmonterede klembokse, der kan drejes 4 x 90, samt nogle med sidemonterede klemkasser.

Hvis kabelindgange ikke er i brug, skal de lukkes.

Ud over hovedvikling og jordklemme kan klemkassen også indeholde tilslutninger for termistorer, varmeelementer til brug ved standset motor, bimetalomskiftere eller PT 100-modstandselementer.

ADVARSEL.
Når motoren står stille, kan spænding for varmeelementer eller direkte viklingsvarme tilsluttes inde i klemkassen.

ADVARSEL.
Kondensatoren i enfasede motorer kan stadig være strømførende på tværs af motorviklinger, selvom motoren er standset.

Montering og demontering

Vigtigt
Dette arbejde skal udføres af kvalificeret personale ved hjælp af egnet værktøj og passende arbejdsmetoder.

Lejer
Der skal udvises særlig omhu over for lejer. Lejerne skal fjernes med aftrækkere og monteres ved opvarmning eller anvendelse af specialværktøj.

Montering af koblingshalvdele og remskiver
Koblingshalvdele og remskiver skal monteres ved hjælp af egnet udstyr og værktøj, som ikke beskadiger lejerne.

Koblingshalvdele eller remskiver må aldrig monteres ved at hamre dem på plads eller ved at fjerne dem med en løftestang, som presses mod motorens krop.

Ligevægt

Motorens rotor er dynamisk afbalanceret.

Som standard udføres afbalanceringen ved hjælp af en hel not.

Vedligeholdelse og smøring

Almindelig kontrol
- Kontroller motoren jævnligt
- Hold motoren ren og sørg for fri gennemstrømning af ventilationsluft
- Kontroller akseltætningsringes stand (f.eks. V-ringen) og udskift dem om nødvendigt
- Kontroller tilslutningers samt monterings- og samlingsbolters stand
- Kontroller lejers stand ved at lytte efter usædvanlig støj, måle vibrationer, lejetemperatur eller kontrollere anvendt smørefedt eller SPM-lejer
  "Ved ændringer i tilstande skal motoren skilles ad og dens dele kontrolleres. Udskift om nødvendigt."

Smøring

Motorer med levetidssmurte lejer
Motorer op til motorhusstørrelse 200 er normalt udstyret med levetidssmurte lejer af typen 2RS. Lejetyperne er beskrevet i de respektive produktkataloger.

Motorer med 2RS-lejer eftersmøres ved at åbne motoren, rense lejer og lejehuse og derefter forsyne dem med nyt fedt op til et niveau på ca. 50-70%.

Vejledende smøreintervaller:
20.000 – 40.000 driftstimer for >4-polsmotorer.
10.000 – 20.000 driftstimer for 2- og 2/4-polsmotorer.
De kortere intervaller gælder for større motorhuse.

Motorer med smørenipler
Motoren skal smøres, mens den er i drift.

Hvis motoren er udstyret med en drænskrue, skal den fjernes midlertidigt under smøring og permanent ved automatisk smøring.

Hvis motoren er forsynet med en informationsmærkeplade, skal værdierne herfra følges og ellers nedenstående værdier.

Motor hus, størrelse	Fedt, mængde (g)	3600 o/m	3000 o/m	1800 o/m	1500 o/m	1000 o/m	500-900 o / m
Kuglelejer							
Smøreintervaller efter antal driftstimer							
112, 132	15		4200	4800	7000	7800	10000 10500
160, 180	20		3200	4200	6000	7000	9000 10000
200, 225	25		1800	3100	5500	6500	8500 9000
250, 280	35		800	2000	5000	6000	8000 8500
315	50		800	2000	4600	5500	7500 8000
355	60		-	1000	4000	5000	7000 8000
Rullelejer							
Smøreintervaller efter antal driftstimer							
200, 225	25		900	1500	4300	5000	6500 7000
250, 280	35		400	1000	3300	4500	6300 6800
315	50		400	1000	2700	3800	6000 6500
355	60		-	-	2200	3200	5500 6000

Tabellen er udarbejdet for horisontalt monterede motorer.

Smøreintervallerne for vertikale motorer er halvdelen af ovennævnte værdier.

Den fedtmængde, som er angivet i tabellen, skal anvendes, hvis små mængder frisk smørefedt udskiftes med de intervaller, som er angivet ovenfor.
Tabelværdierne er baseret på en lejetemperatur på 80° C. Værdierne skal halveres for hver stigning på 15 K i lejetemperaturen.

Hvis den maksimale lejetemperatur er 70° C, kan tabelværdierne fordobles.

ADVARSEL
Den maksimale driftstemperatur for smørefedt og lejer må ikke overskrides.

Kortere smøreintervaller er påkrævet i tilfælde af drift ved højere hastigheder, f.eks. i forbindelse med frekvensomformeranvendelse, eller lavere hastigheder med større belastning. I sådanne tilfælde skal Svend Høyer A/S kontaktes for yderligere oplysninger.

Ved en fordobling af hastigheden skal man typisk reducere smøreintervallerne til ca. 40% af de værdier, som er angivet i ovenstående tabel.

Det skal også kontrolleres, om lejerne er egnet til drift ved høj hastighed.

Smøremidler
Ved smøring skal der anvendes specielt kuglelejefedt med følgende egenskaber:
- Litiumfedt eller litiumkompleksfedt af god kvalitet
- Råolieviskositet 100-140 cST ved 40° C
- Konsistens NLGI grade 2 eller 3
- Temperaturområde -30° C - +120° C, løbende

Fedt med de korrekte egenskaber kan fås hos alle større fabrikanter af smøremidler.

I tilfælde af skift til et andet fedtmærke og efterfølgende usikkerhed om kompatibiliteten skal fedt påføres flere gange med kortere intervaller for at udskifte det gamle fedt.

Ved kraftigt belastede og/eller langsomt roterende lejer skal der anvendes EP-fedt.

Ved korte smøreintervaller som følge af en lejetemperatur på 80° C eller derover skal der anvendes højtemperaturfedt, som normalt tillader ca. 15 K højere lejetemperaturer.

Hvis den omgivende temperatur er under -25° C, skal Svend Høyer A/S kontaktes vedrørende oplysninger om mulgheden for lavtemperaturfedt.

ADVARSEL
Mange fedtmidler kan give anledning til hudirritation og øjenbetændelse.
Følg derfor alle fabrikantens sikkerhedsforskrifter.

Reservedele
Ved bestilling af reservedele anføres alle de betegnelser og produktkoder, som er angivet på mærkepladen. Hvis motoren er forsynet med et serienummer, skal dette angives.

Connection diagram
Anschlußdiagram
Connection
Conexión
Collegamento
Anslutningdiagramm

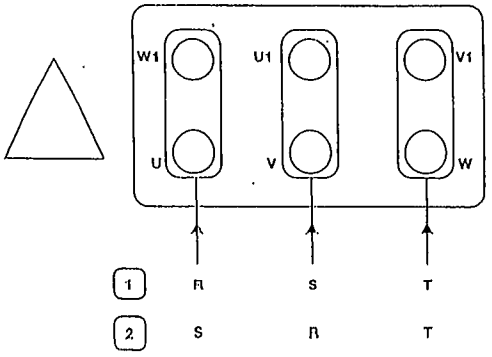

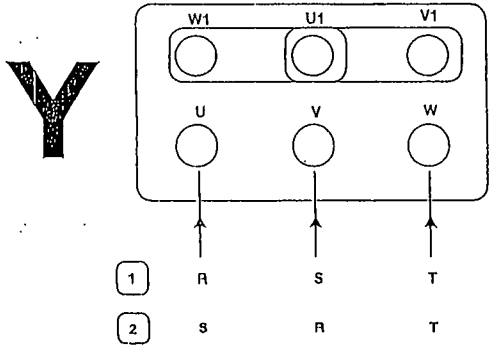

Betriebsanleitung
Operating Instruction
Instruction de service

DB-200-3

Druckbehälter:

Wassergekühlte Verflüssiger und Ölkühler

- K033N .. K4803T
- K033NB .. K4803TB
- OW401 .. OW941
- OW401B .. OW941B

Pressure vessels:

Water-Cooled Condensers and Oil Coolers

- K033N .. K4803T
- K033NB .. K4803TB
- OW401 .. OW941
- OW401B .. OW941B

Réservoirs sous pression:

Condenseurs à eau et Refroidisseurs d'huile

- K033N .. K4803T
- K033NB .. K4803TB
- OW401 .. OW941
- OW401B .. OW941B

Inhalt	Seite
1 Sicherheit	1
2 Anwendungsbereiche	4
3 Projektierung	5
4 Montage	8
5 In Betrieb nehmen	13
6 Betrieb	16

Content	Page
1 Safety	1
2 Application ranges	4
3 Plant design	5
4 Mounting	8
5 Commissioning	13
6 Operation	16

Sommaire	Page
1 Sécurité	1
2 Champs d'applications	4
3 Conception	5
4 Montage	8
5 Mise en Service	13
6 Fonctionnement	16

1 Sicherheit

Diese Druckbehälter sind zum Einbau in Kälteanlagen entsprechend der **EU-Maschinenrichtlinie** 98/37/EG und der **EG-Druckgeräterichtlinie** 97/23/EG vorgesehen. Sie dürfen nur in Betrieb genommen werden, wenn sie gemäß vorliegender Anleitung in diese Kälteanlagen eingebaut worden sind und als Ganzes mit den entsprechenden gesetzlichen Vorschriften übereinstimmen (anzuwendende Normen: siehe Konformitätserklärung).*

Autorisiertes Fachpersonal
Sämtliche Arbeiten an Verdichtern und Kälteanlagen dürfen nur von Fachpersonal ausgeführt werden, das in allen Arbeiten ausgebildet und unterwiesen wurde. Für die Qualifikation und Sachkunde des Fachpersonals gelten die jeweils gültigen Richtlinien.

1 Safety

These pressure vessels are intended for installation in refrigeration plants according to the **EC Machines Directive** 98/37/EC and the **EC Pressure Equipment Directive** 97/23/EC. They may be put to service only, if they have been installed in these refrigeration plants according to the existing instruction and as a whole agree with the corresponding provisions of legislation (standards to apply: refer to Declaration of Conformity).*

Authorized staff
All work on compressor and refrigeration systems shall be carried out only by refrigeration personnel which has been trained and instructed in all work. The qualification and expert knowledge of the refrigeration personnel corresponds to the respectively valid guidelines.

1 Sécurité

Ces réservoirs sous pression sont prévus pour être incorporés dans des installations frigorifiques conformément à la **Directive CE Machines** 98/37/CE et à la **Directive CE Equipements sous Pression** 97/23/CE. Leur mise en service est uniquement autorisée s'ils ont été incorporés dans des installations frigorifiques conformément à la présente instruction et si cettes installations frigorifiques répondent dans leur totalité aux réglementations légales en vigueur (les normes qu'il faut utiliser: voir la Déclaration de conformité).*

Personnel spécialisé autorisé
Seul un personnel spécialisé ayant été formé et initié est autorisé à réaliser l'ensemble des travaux sur les compresseurs et installations frigorifiques. Les directives en vigueur à cet effet sont valables pour la qualification et la compétence du personnel spécialisé.

* Hinweis gilt nur für Länder der EU
* Information is valid for countries of the EC
* Indication valable pour les pays de la CE

Die Druckbehälter sind nach dem aktuellen Stand der Technik und entsprechend den geltenden Vorschriften gebaut. Auf die Sicherheit der Anwender wurde besonderer Wert gelegt.

Diese Betriebsanleitung während der gesamten Lebensdauer des Druckbehälters aufbewahren.

The pressure vessels are constructed according to the state of the art and valid regulations. Particular emphasis has been placed on the users' safety.

Keep this Operating Instruction during the whole lifetime of the pressure vessel.

Les réservoirs sous pression sont conçus d'après les règles de l'art actuelles et conformément aux prescriptions en vigueur. Une attention particulière a été apportée à la sécurité de l'utilisateur.

Garder cette instruction de service pendant toute la durée de service du réservoir sous pression.

Restgefahren

Vom Druckbehälter können unvermeidbare Restgefahren ausgehen. Jede Person, die an diesem Gerät arbeitet, muss deshalb diese Betriebsanleitung sorgfältig lesen!

Es gelten zwingend
- die einschlägigen Unfallverhütungsvorschriften (z. B. BGV D1),
- die allgemein anerkannten Sicherheitsregeln,
- die EU-Richtlinien,
- Länder spezifische Normen und Bestimmungen z. B. EN 378.

Residual hazards

Certain residual hazards from the pressure vessel are unavoidable. All persons working on these units must therefore read this Operating Instruction carefully!

All of the following have validity:
- specific rules for the prevention of accidents (e. g. German rule BGV D1),
- generally safety standards,
- EU guidelines,
- national standards and regulations e. g. EN 378.

Dangers résiduels

Le réservoir sous pression peut être la source de dangers résiduels inévitables. Par conséquent, chaque personne qui travaille sur cet appareil doit lire attentivement cette instruction de service !

A prendre en considération
- les prescriptions relatives à la prévoyance contre les accidents (par ex. prescription allemande BGV D1),
- les règles de sécurité généralement reconnues,
- les directives de l'UE,
- les normes et dispositions spécifiques du pays concerné par ex. EN 378.

Sicherheitshinweise

sind Anweisungen um Gefährdungen zu vermeiden.
Sicherheitshinweise genauestens einhalten!

Achtung!
Anweisung um eine mögliche Gefährdung von Geräten zu vermeiden.

Vorsicht!
Anweisung um eine mögliche minderschwere Gefährdung von Personen zu vermeiden.

Warnung!
Anweisung um eine mögliche schwere Gefährdung von Personen zu vermeiden.

Gefahr!
Anweisung um eine unmittelbare schwere Gefährdung von Personen zu vermeiden.

Safety references

are instructions intended to prevent hazards.
Safety instructions must be exactly observed!

Attention!
Instructions on preventing possible damage to equipment.

Caution!
Instructions on preventing a possible minor hazard to persons.

Warning!
Instructions on preventing a possible severe hazard to persons.

Danger!
Instructions on preventing a high risk of severe hazard to persons.

Les indications de sécurité

sont des instructions pour éviter les mises en danger.
Respecter scrupuleusement les indications de sécurité !

Attention !
Instruction pour éviter une possible mise en danger d'appareils.

Prudence !
Instruction pour éviter une possible mise en danger bénigne de personnes.

Avertissement !
Instruction pour éviter une possible mise en danger grave de personnes.

Danger !
Instruction pour une imminente mise en danger grave de personnes.

Allgemeine Sicherheitshinweise

Warnung!
Der Druckbehälter ist im Auslieferungszustand mit Schutzgas gefüllt (**Überdruck** ca. 0,5 .. 1 bar).
Bei unsachgemäßer Handhabung sind Verletzungen von Haut und Augen möglich.
Bei Arbeiten am Druckbehälter Schutzbrille tragen!
Anschlüsse nicht öffnen, bevor Überdruck abgelassen ist.

Gefahr!
Berstgefahr von Komponenten und Rohrleitungen durch hydraulischen Überdruck.
Schwerste Verletzungen möglich.
Maximal zulässige Drücke nicht überschreiten!

Bei Arbeiten am Druckbehälter, nachdem die Anlage in Betrieb genommen wurde:

Warnung!
Druckbehälter kann unter Druck stehen!
Schwere Verletzungen möglich.
Druckbehälter auf drucklosen Zustand bringen!

Ölkühler:

Vorsicht!
Oberflächen-Temperaturen von über 60°C können auftreten.
Verbrennungen möglich.
Zugängliche Stellen kennzeichnen.

Wassergekühlte Verflüssiger:

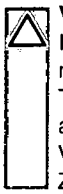

Vorsicht!
Im Betrieb können am Kältemittel-Eintritt Oberflächen-Temperaturen von über 60°C auftreten.
Verbrennungen möglich.
Zugängliche Stellen kennzeichnen.

Bei Arbeiten am Rohrsystem des Kühlmediums gilt zusätzlich:

Warnung!
Kühlmedium kann Haut und Augen verätzen!
Schutzbrille tragen!

General safety references

Warning!
The pressure vessel is under pressure with a holding charge, which is **above atmospheric pressure** (approx. 0,5 .. 1 bar).
Injury of skin and eyes is possible.
Wear safety goggles while working on pressure vessel.
Do not open connections before pressure has been released.

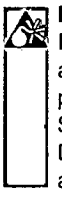

Danger!
Explosion risk of components and pipelines by hydraulic overpressure.
Severest injuries possible.
Do not exceed maximum allowable pressures!

For any working at the pressure vessel after the plant has been commissioned:

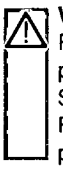

Warning!
Pressure vessel can be under pressure!
Severe injuries possible.
Release the pressure in the pressure vessel!

Oil coolers:

Caution!
Surface temperatures exceeding 60°C can be reached.
Burnings possible.
Mark accessible sectors.

Water-cooled condensers:

Caution!
During operation surface temperatures exceeding 60°C can be reached at the refrigerant inlet.
Burnings possible.
Mark accessible sectors.

For any working at the pipe system additionally:

Warning!
Coolant can cauterize skin and eyes!
Wear safety goggles!

Indications de sécurité générales

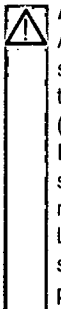

Avertissement !
A la livraison, le réservoir sous pression est rempli d'un gaz de protection et sont en **surpression** (environ 0,5 .. 1 bar).
Des blessures à la peau et aux yeux sont possibles en cas de maniement inapproprié.
Lors de travaux sur le réservoir sous presion, porter des lunettes de protection !
Ne pas ouvrir les raccords avant d'avoir évacué la surpression.

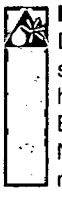

Danger !
Danger d'éclatement des composants et conduites par surpression hydraulique.
Blessures les plus graves possibles.
Ne pas dépasser les pressions maximales admissibles !

Pour des travaux au réservoir sous pression après l'installation a été mise en service:

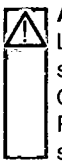

Avertissement !
Le réservoir sous pression peut-être sous pression !
Graves blessures possibles.
Retirer la pression sur le réservoir sous pression !

Refroidisseurs d'huile:

Prudence !
Températures de surface excédant 60°C pourront être atteintes.
Possibilité de brûlures.
Marquer les endroits accessibles.

Condenseurs à eau:

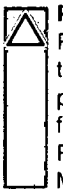

Prudence !
Pendant le service, des températures de surface excédant 60°C pourront être atteintes à l'entrée du fluide frigorigène ou d'huile.
Possibilité de brûlures.
Marquer les endroits accessibles.

Pour des travaux à la tuyauterie en plus:

Avertissement !
Fluide caloporteur peut cautériser peau et yeux !
Porter des lunettes de protection !

2 Anwendungsbereiche

2 Application ranges

2 Champs d'application

		PS	TS
K033H(B) .. K4803T(B) & OW401(B) .. OW941(B) Zulässige Kältemittel Permitted refrigerants Fluides frigorigènes autorisés	97/23/EG (PED) Gruppe / group / groupe 2 ② Gruppe / group / groupe 1 ③	28 bar	120°C -10°C
OW401(B) .. OW941(B) Zulässige Kältemaschinenöle Permitted refrigerantion compressor oils Huiles pour machines frigorifiques autorisées	entsprechend / according to / suivant ISO 6743-3 DIN 51503-1	28 bar	120°C -10°C
Kühlmedien Coolants ① Fluides caloporteurs	K033H .. K4803T OW401 .. OW941	Wasser oder Kühlsole water or brine eau ou saumure	10 bar	95°C -10°C Frostschutz! anti-freeze! antigel!
	K033HB .. K4803TB OW401B .. OW941B	Seewasser, Wasser oder Kühlsole seawater, water or brine eau de mer, eau ou saumure		

① Kühlsole-Konzentrationen siehe BITZER Software
② Kältemittel-Gruppe L1 nach EN 378-1
③ Kältemittel-Gruppen L2 und L3 nach EN 378-1. Nur nach Rücksprache mit BITZER
PS maximal zulässiger Betriebsdruck
$t_{d\,max}$ maximal zulässige Betriebstemperatur
$t_{d\,min}$ minimal zulässige Betriebstemperatur

① For concentration of the brine see BITZER Software
② Refrigerant group L1 according to EN 378-1
③ Refrigerant groups L2 and L3 accor ding to EN 378-1. Only after consultation with BITZER.
PS maximum allowable operating pressure
$t_{d\,max}$ maximum allowable operating temperature
$t_{d\,min}$ minimum allowable operating temperature

① Pour concentration du saumure voir BITZER Software
② Groupe de fluide frigène L1 conformément à la EN 378-1
③ Groupes de fluide frigène L2 et L3 conformément à la EN 378-1. Seulement après avoir consulté BITZER
PS pression maximale admissible de service
$t_{d\,max}$ température maximale admissible de service
$t_{d\,min}$ température minimale admissible de service

Achtung – Korrosion!
Das Kühlmedium darf gegenüber dem Rohrmaterial der Druckbehälter und dem Werkstoff der Umlenkdeckel nicht aggressiv sein:

K033N .. K4803T / OW401 .. OW941 (Standard-Ausführung):
Rohre: Kupfer
Umlenkdeckel: Grauguss

K033NB .. K4803TB / OW401B .. OW941B (Seewasser-Ausführung):
Rohre: Kupfer-Nickel-Legierung
Umlenkdeckel: Kunststoff beschichtet

Attention – Corrosion!
The coolant must not react aggressively with the pipe material of the pressure vessel or the material of the end covers:

K033N .. K4803T / OW401 .. OW941 (Standard design):
pipes: cooper
end covers: grey cast iron

K033NB .. K4803TB / OW401B .. OW941B (seawater-resistant design):
pipes: copper-nickel-alloy
end covers: plastic coated

Attention – Corrosion !
Le fluide caloporteur ne doit pas être agressif envers les matériaux constituant les tubes et les couvercles déflecteurs des réservoirs sous pression:

K033N .. K4803T / OW401 .. OW941:
(Version standard):
tubes: cuivre
couvercles déflecteurs: fonte grise

K033NB .. K4803TB / OW401B .. OW941B (version marine):
tubes: alliage cuivre-nickel
couvercles déflecteurs: revêtus d'une résine synthétique

Ammoniak (NH_3) Ausführung

OW160A .. OW860A (Standard):
Rohre: Stahl
Umlenkdeckel: Grauguss

OW160AC .. OW860AC (Seewasser):
Rohre: Kunststoff beschichtet
Umlenkdeckel: Kunststoff beschichtet

Ammonia (NH_3) design

OW160A .. OW860A (standard):
pipes: steel
end covers: grey cast iron

OW160AC .. OW860AC (seawater):
pipes: plastic coated
end covers: plastic coated

Version ammoniaque (NH_3)

OW160A .. OW860A (standard):
tubes: acier
couvercles déflecteurs: fonte grise

OW160AC .. OW860AC (version marine):
tubes: revêtus d'une résine synthétique
couvercles déflecteurs: revêtus d'une résine synthétique

Als kostenlosen Service prüft BITZER die Eignung der Rohrmaterialien gegen Vorlage einer Wasser-Analyse.
Prüf-Grundlage ist der aktuelle Stand der Erfahrungen.
Eine absolute Gewährleistung auf Korrosions-Sicherheit kann jedoch aufgrund der komplexen Verhältnisse nicht gegeben werden.

As a free service, BITZER will examine the suitability of pipe materials if a water analysis is provided.
The basis for the examination is the current status of knowledge.
However, due to the complexity of the situation, no absolute guarantee can be given that materials will be corrosion proof.

Sur présentation d'une analyse d'eau, BITZER contrôle la compatibilité avec les matériaux constituant les tubes (service gratuit).
Le contrôle repose sur l'état actuel des expériences acquises.
Cependant, en raison de la complexité des rapports, une garantie absolue quant à la sécurité contre la corrosion ne peut pas être donnée.

3 Projektierung

3.1 Druckbehälter transportieren

Druckbehälter verschraubt auf der Palette transportieren. Wenn vorhanden an Transportösen oder oberen Befestigungswinkeln anheben.

3.2 Aufstellort

Bei Außenaufstellung Druckbehälter durch geeignete Maßnahmen vor Korrosion (z. B. durch Seewasser oder aggressive Atmosphäre) und vor niedrigen Außentemperaturen schützen. Ggf. empfiehlt sich Rücksprache mit BITZER.

Achtung – Einfriergefahr!
Es muss sichergestellt sein, dass die Temperatur am Aufstellort ausreichend oberhalb dem Gefrierpunkt des Kühlmediums liegt.

3.3 Aufbau der Anlage

Bei Montage eines Verdichters auf den Verflüssiger:

Achtung!
Auf den Verflüssiger dürfen keine Schwingungen übertragen werden!
Verflüssiger nicht als tragendes Element verwenden!
Verdichter nur mit Dämpfungselementen auf Verflüssiger montieren!

Die Druckleitung muss ausreichend elastisch sein, damit auf den Verflüssiger möglichst wenig Schwingungen und Bewegungen des Verdichters übertragen werden. Eventuell kann es notwendig sein, flexible Schwingungs-Ausgleicher einzubauen.

Extreme Druck-Pulsationen sollten durch den Einbau von Mufflern gedämpft werden.

3 Plant design

3.1 Pressure vessel transport

Transport the pressure vessel screwed on a pallet. Lift it using the eyebolts or the upper fastening brackets if available.

3.2 Location

For outdoor installation take suitable measures to protect pressure vessel against corrosion (e.g. by seawater or aggressive atmospheres) and low ambient temperatures. Consultation with BITZER is recommended.

Attention – Danger of freezing!
It is necessary to ensure that the temperature at the location is high enough above the freezing point of the coolant.

3.3 Plant design

If a compressor is mounted on the condenser:

Attention!
No vibrations should be transmitted to the condenser!
Do not use the condenser as load-bearing element!
Mount the compressor on the condenser only with damper elements!

The discharge line must be sufficiently elastic so that a minimum of vibrations and movement is transferred to the condenser. It may be necessary to fit flexible vibration dampers.

Extreme pressure pulsations should be damped by fitting mufflers.

3 Conception

3.1 Transport du réservoir sous pression

Transporter le réservoir sous pression vissé sur une palette. En cas disponible le soulever aux œillets de suspension ou aux équerres de fixation de dessus.

3.2 Emplacement

En cas d'installation extérieure prendre des mesures adéquates pour protéger le réservoir sous pression contre la corrosion (par ex. par l'eau de mer et l'atmosphère agressive) et les températures extérieures basses. Le cas échéant, il est conseillé de consulter BITZER.

Attention – Risque de prise en glace !
Il faut s'assurer que la température à l'emplacement est suffisamment plus élevée que le point de gel du fluide caloporteur.

3.3 Conception de l'installation

En cas de montage d'un compresseur sur le condenseur:

Attention !
N'admettre pas la transmission des vibrations au condenseur !
Ne pas utiliser le condenseur comme bâti !
Toujours prévoir des éléments antivibratoires entre le compresseur et le condenseur !

La conduite de refoulement devra être suffisamment élastique pour ne pas transmettre trop de vibrations et de mouvements du compresseur au condenseur. Le cas échéant, prévoir la mise en place de flexibles antivibratoires.

Des pulsions de pression extrêmes devront être atténuées par un silencieux.

3.4 Kältemittel- bzw. Öl-Seite

Die gesamte Anlage sollte so ausgelegt und betrieben werden, dass der maximale Betriebsdruck im Druckbehälter nicht überschritten werden kann (28 bar).

Druckentlastungs-Ventile sind zwingend erforderlich, wenn

- damit zu rechnen ist, dass der maximale Betriebsdruck durch äußere Wärmequellen überschritten wird (z. B. Brand) oder wenn
- die gesamte Kältemittel-Füllung der Anlage größer ist als 90% des Behälter-Inhalts bei 20°C (Fassungsvolumen). Der Behälter-Inhalt ist das Volumen zwischen betriebsmäßig absperrbaren Ventilen vor und nach einem Druckbehälter. Bei Behältern, die direkt hintereinander montiert sind, gilt das Volumen aller Behälter und der Leitung.

In diesen Fällen sollten bevorzugt Überström-Einrichtungen eingesetzt werden, die das Kältemittel oder das Öl auf die Niederdruck-Seite der Anlage leiten (Emissions-Minderung).

3.4 Refrigerant resp. oil side

The entire plant should be designed and operated so that the maximum operating pressure in the pressure vessel (28 bar) cannot be exceeded.

Pressure relief valves are essential if

- it is to be expected that the maximum operating pressure will be exceeded due to external heat sources (e.g. fire), or if
- the entire refrigerant charge of the plant is more than 90% of the receiver volume at 20°C (charge capacity). Receiver volume means the volume between operationally lockable valves before and after a pressure vessel. In case of two vessels being mounted in series, it is the volume of both vessels and the connecting pipe.

In these cases relief devices should be prefered that lead the refrigerant or the oil to the low-pressure side of the plant (emission reduction).

3.4 Côté fluide frigorigène / huile

Toute l'installation devra être conçue et exploitée de façon à ce que la pression de service maximale dans le réservoir sous pression ne puisse pas être dépassée (28 bar).

Des soupapes de surpression sont vraiment nécessaires quand:

- il est possible que la pression de service maximale soit dépassée (influence de sources de chaleur extérieures telles que incendie par ex.), ou quand
- la charge totale en fluide frigorigène de l'installation entière est supérieure à 90% de la contenance du réservoir sous pression à 20°C. La contenance signifie le volume entre les vannes serrables en service avant et après un réservoir sous pression. En cas de deux réservoirs montés en série, c'est le volume des deux réservoirs et de la conduite.

Dans ces cas, il faudrait préconiser l'emploi de systèmes de décharge qui dévient le fluide frigorigène ou l'huile vers le côté basse pression de l'installation (limitation de rejets).

Sicherheitsschalteinrichtung

Entsprechend den örtlichen Vorschriften müssen Druck begrenzende Sicherheitsschalteinrichtungen vorgesehen werden.

Safety switching device

In conformance with local regulations, pressure limiting safety switching devices must provided for.

Dispositif de sécurité par coupure

Conformément à la réglementation locale en vigueur, il faut prévoir des dispositifs de sécurité par coupure pour limiter la pression.

3.5 Kühlmedium-Seite

Das Kühlmedium sollte weder Feststoffe noch Gasanteile enthalten:

- Feststoffe müssen durch geeignete Filter abgeschieden werden.
- Gasanteile sollten durch konstruktive Maßnahmen vermieden werden.

Offene Kreisläufe:
Der Druckbehälter darf sich während des Stillstands nicht entleeren. Dazu entweder

- einen Kühlmedium-Regler am Kühlmedium-Austritt des Druckbehälters einbauen
- oder einen Schwanenhals am Auslauf.

3.5 Coolant side

The coolant should contain neither solids nor gases:

- Any solids must be separated out using suitable filters.
- A gas content should be avoided through suitable design measures.

Open circuits:
The pressure vessel must not drain off while not in use. For this reason, fit either

- a coolant regulator at the coolant outlet of the pressure vessel, or
- a swan-neck at the outlet.

3.5 Côté fluide caloporteur

Le fluide caloporteur ne devrait contenir ni corps solide ni élément gazeux:

- Les corps solides doivent être récupérés par des filtres adéquats.
- La présence de gaz peut être évitée par certaines adaptations.

Circuits ouverts:
Durant les phases d'arrêt, le réservoir sous pression ne doit pas se vider.
Prévoir donc:

- un régulateur à la sortie du fluide caloporteur du réservoir sous pression ou
- un coude surélevé à la sortie.

Bei Leitungswasser als Kühlmedium muss geprüft werden, ob der Einbau eines Rohrtrenners vorgeschrieben wird.

Bei Kühlung mit Seewasser:
Wenn das verwendete Seewasser auf Grund der örtlichen Bedingungen zu Muschel-Bildung führen kann, sollten geeignete Filter eingebaut werden. Dies dient auch zum Schutz der Rohrleitungen vor Muschelbefall.

When using tap-water as a coolant, it is necessary to check whether the installation of a pipe disconnector is stipulated.

When cooling with seawater:
If, due to local conditions, the seawater in use can lead to scale or shell deposits, suitable filters should be fitted. This also serves to protect the pipe lines from shell deposits.

Si le fluide caloporteur est de l'eau de ville, vérifier si la mise en place d'un disconnecteur de conduite est prescrit.

Refroidissement par eau de mer:
Si, en raison des conditions locales, l'eau de mer utilisée peut provoquer la formation de coquillages, des filtres adéquats doivent être installés. Ceux-ci serviront également à protéger les tuyauteries contre ce genre de dépôts.

3.6 Anlage anmelden

Verflüssiger und Ölkühler sind Druckbehälter nach der Druckgeräterichtlinie 97/23/EG. Deshalb muss die gesamte Anlage entsprechend den örtlichen Vorschriften bei der Aufsichtsbehörde angemeldet und von ihr genehmigt werden.
Die Kategorie für die Konformitätsbewertung des jeweiligen Druckbehälters ist in der folgenden Tabelle aufgelistet.

In Ländern außerhalb der EU müssen die jeweiligen Vorschriften eingehalten werden.

3.6 Plant registration

Condensers and oil coolers are pressure vessels according to the Pressure Equipment Directive 97/23/EC. For this reason the entire plant must be registered with the supervisory authority and duly approved in accordance with local regulations.
The category for the conformity assessment of each pressure vessel is listed in the following table.

In non EU countries local regulations must be complied with.

3.6 Déclaration de l'installation

Les condenseurs et les refroidisseurs d'huile sont des réservoirs sous pression d'après la directive équipements sous pression 97/23/CEE. Par conséquent, l'ensemble de l'installation devra être déclaré à l'organisme de contrôle et autorisé par celui-ci, conformément à la réglementation locale en vigueur.
La catégorie pour l'évaluation de conformité par chaque réservoir sous pression est indiquée dans le tableau suivant.

Dans les pays en dehors de l'UE, les règlementations respectives seront à prendre en considération.

Typ Type Type	Behälter-Inhalt (Kältemittel / Öl) Receiver volume (refrigerant / oil) Contenance de rés. (fluide frig. / huile)	Kategorie für die Konformitätsbewertung nach 97/23/EG Category for the conformity assessment according to 97/23/EC Catégorie pour l'évaluation de la conformité d'après 97/23/CE	
		Fluide-Gruppe 2 Fluid group 2 Groupe de fluide 2	Fluide-Gruppe 1 Fluid group 1 Groupe de fluide 1
	dm^3 (l)		
K033N(B)	3,8	I Modul A1	II Modul A1
K073H(B)	3,4	I Modul A1	II Modul A1
K123H(B)	5,1	I Modul A1	II Modul A1
K203H(B)	11,8	II Modul B + D	III Modul B + D
K283H(B)	11,3	II Modul B + D	III Modul B + D
K373H(B)	14,5	II Modul B + D	III Modul B + D
K573H(B)	29,4	II Modul B + D	III Modul B + D
K813H(B)	27,7	II Modul B + D	III Modul B + D
K1053H(B)	40,0	III Modul B + D	IV Modul B + D
K1353T(B)	37,0	III Modul B + D	IV Modul B + D
K1973T(B)	76,0	III Modul B + D	IV Modul B + D
K2923T(B)	67,0	III Modul B + D	IV Modul B + D
K3803T(B)	108,0	IV Modul B + D	IV Modul B + D
K4803T(B)	98,0	III Modul B + D	IV Modul B + D
OW401(B)	10,5	II Modul B + D	—
OW501(B)	14,0	II Modul B + D	—
OW781(B)	18,0	II Modul B + D	—
OW941(B)	24,0	II Modul B + D	—

4 Montage

4.1 Lieferzustand

Der Druckbehälter ist im Lieferzustand verschlossen und mit Schutzgas befüllt. Der Schutzgas-Überdruck beträgt 0,5 .. 1 bar. Alle Rotalock- und Flansch-Anschlüsse sind durch eine eingelegte Metallscheibe verschlossen.

4.2 Rohrleitungen anschliessen

Die Rohranschlüsse für Kältemittel bzw. Öl sind so ausgeführt, dass Rohre in den gängigen Millimeter- und Zoll-Abmessungen verwendet werden können. Löt-Anschlüsse haben gestufte Durchmesser. Je nach Abmessung wird das Rohr mehr oder weniger tief eintauchen. Im Bedarfsfall kann das Buchsen-Ende mit dem größeren Durchmesser auch abgesägt werden.

Anschluss-Positionen siehe Seite 11.

Achtung!
Ventile nicht überhitzen!
Während und nach dem Löten Ventilkörper kühlen.
Maximale Löttemperatur 700°C.

Zuerst Überdruck aus dem Druckbehälter ablassen: Anschlüsse vorsichtig öffnen.

4 Mounting

4.1 Condition as delivered

In delivery condition the pressure vessel is closed and filled with holding charge. The holding charge has an overpressure of 0.5 to 1 bar. All Rotalock and flange connections are closed by an inserted metal plate.

4.2 Pipe line connections

The pipe connections for refrigerant resp. oil are designed for tubes having the normal millimetre or inch dimensions. Brazing connections have stepped diameters. According to the size the tube can be pushed more or less into the fitting. If not required the end with the largest diameter can be cut-off.

Positions of connections see page 11.

Attention!
Avoid overheating of the valves!
Cool valve body while and after brazing!
Max. brazing temperature 700°C.

Release the pressure from the pressure vessel first: Open the connections carefully.

4 Montage

4.1 Etat à la livraison

A la livraison, le réservoir sous pression est clos et rempli d'un gaz de protection. La surpression du gaz de protection est de 0,5 .. 1 bar. Tous les raccords rotalock et à brides sont obturés par une plaque métallique.

4.2 Raccordement de la tuyauterie

Les raccords pour le fluide frigorigène / pour l'huile sont exécutés de façon à ce que les tubes usuels en millimètres et en pouces puissent être utilisés. Les raccords à braser ont plusieurs diamètres successifs. Suivant la section, le tube sera inséré plus ou moins profondément. Si nécessaire, l'extrémité avec le plus grand diamètre peut être sciée.

Positions des raccords, voir page 11.

Attention !
Ne pas surchauffer les vannes !
Refroidir les corps de vanne lors du brasage et après !
Température de brasage maximale 700°C.

Evacuer tout d'abord la surpression du réservoir sous pression: Ouvrir les raccords prudemment.

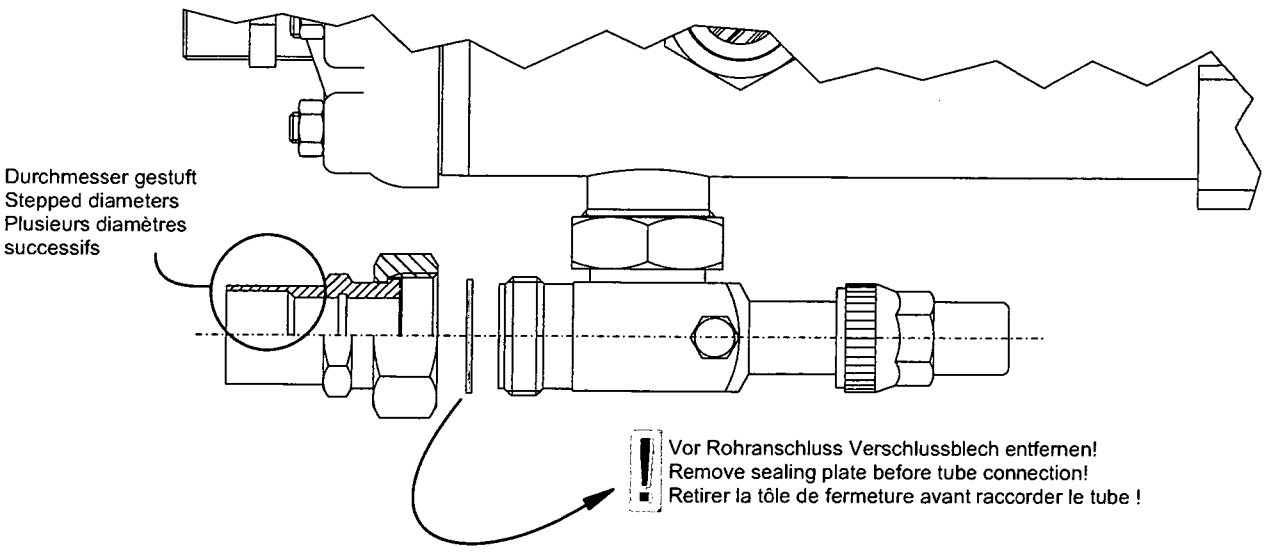

Abb. 1 Rohr-Anschluss mit Rotalock-Verschraubung

Fig. 1 Pipe connection with Rotalock adaptor

Fig. 1 Raccord de tube avec raccord à visser Rotalock

Warnung!
Druckbehälter steht unter Überdruck durch Schutzgas.
Verletzungen von Haut und Augen möglich.
Bei Arbeiten am Druckbehälter Schutzbrille tragen!

Absperrventile und / oder Lötanschlüsse entfernen.

Achtung!
Eintritt von Luftfeuchtigkeit möglichst vermeiden!
Offenen Druckbehälter umgehend in die Anlage einbauen.

Druckbehälter während Montage-Unterbrechungen wieder verschliessen.

Während der Löt- oder Schweißarbeiten die entsprechenden Leitungsteile mit Schutzgas spülen.

Sauberkeit der Rohre

Grundsätzlich nur Rohrleitungen und Anlagen-Komponenten verwenden, die
- innen sauber und trocken sind (frei von Zunder, Metallspänen, Rost- und Phosphat-Schichten) und
- luftdicht verschlossen angeliefert werden.

Druckentlastungs-Ventil an Verflüssiger montieren

Innengewinde 3/8"-18 NPTF:
Druckentlastungs-Ventil einschrauben.

Außengewinde 1 1/4"-12 UNF:
Druckentlastungs-Ventil in Adapter einschrauben. Dann Adapter mit Überwurfmutter am Druckbehälter befestigen.

Lieferbare Adapter siehe Abb. 2, Anschluss-Position Seite 11.

Warning!
Pressure vessel is under pressure with holding charge.
Injury of skin and eyes possible.
Wear safety goggles while working on pressure vessel!

Remove shut-off valves and / or brazed connections.

Attention!
If possible, prevent any humidity from entering!
Open pressure vessels should be immediately installed into the plant.

Close the pressure vessel again during any installation interruptions.

Flush out the relevant pipes with inert gas during any brazing or welding work.

Cleanliness of the pipes

Only use tubes and components which are
- clean and dry inside (free from slag, swarf, rust, and phosphate coatings) and
- which are delivered with an air tight seal.

Mounting the pressure relief valve at condenser

Internal thread 3/8"-18 NPTF:
Screw the pressure relief valve.

External thread 1 1/4"-12 UNF:
Screw the pressure relief valve into the adaptor. Then fasten the adaptor at the pressure vessel with the union nut.

Available adaptors see figure 2, connection position page 11.

Avertissement !
Le réservoir sous pression est en pression avec du gaz de protection.
Blessures de la peau et des yeux possibles.
Porter des lunettes de protection durand les travaux sur le réservoir sous pression !

Retirer les vannes d'isolement et / ou les raccords à braser.

Attention !
Eviter si possible l'introduction d'humidité !
Connecter immédiatement le réservoir de pression ouvert à l'installation.

Refermer le réservoir sous pression durant les arrêts de travail.

Durant les travaux de brasage et de soudage, rincer les portions de tuyauterie concernées avec du gaz de protection.

Propreté des tubes

D'une manière générale, n'utiliser que des tubes et des composants qui
- sont propres et secs à l'intérieur (pas de calamine, de copeaux métalliques, de dépôts de rouille et de phosphates) et
- sont livrés hermétiquement clos.

Monter la soupape de surpression au condenseur

Filet intérieur 3/8"-18 NPTF:
Visser la soupape de surpression.

Filet extérieur 1 1/4"-12 UNF:
Visser la soupape de surpression dans l'adaptateur. Puis fixer l'adaptateur sur le réservoir sous pression avec l'ecrou-raccord.

Adaptateurs disponibles voir figure 2, position de raccord page 11.

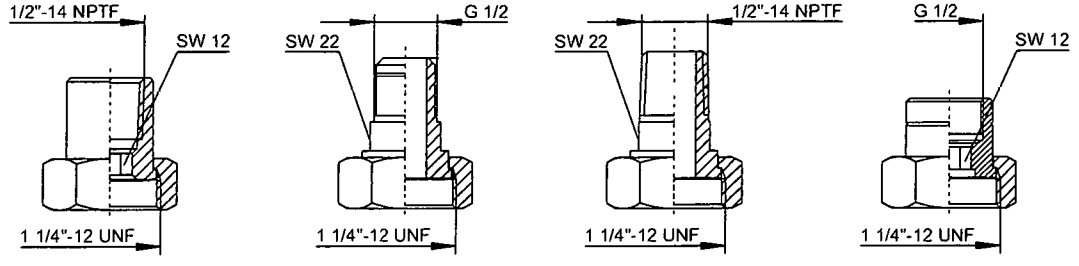

Abb. 2 Lieferbare Adapter für das Druckentlastungs-Ventil

Fig. 2 Available adaptors for the pressure relief valve

Fig. 2 Adaptateurs disponibles pour la soupape de surpression

Anschluss für Manometer

nur bei Wartungsarbeiten, nicht während Betrieb nutzen.

Hier keinesfalls Druck-Wächter anschließen!

Connection for pressure gauge

use it only for maintenance work not during operation.

By no means pressure limiters may be connected here!

Raccord du manomètre

utiliser seulement pour des travaux de maintenance ne pas pendant le service.

Ne raccorder, en aucun cas, les limiteurs de pression ici !

4.3 Kühlmedium-Rohre anschließen

Rohre einschrauben, dabei sicherstellen, dass die Einschraub-Nippel nicht mitgedreht werden.

Anschlussgewinde (3) und (4):

- Standard-Ausführung
  Innengewinde (G..)
  oder Flansch (DN..)
- Seewasser-Ausführung
  Nippel mit Außengewinde (G..)
  oder Flansch (DN..)

4.3 Fitting coolant pipes

Screw the pipes. Make sure that the screwed nipples do not turn.

Joining Thread (3) and (4):

- standard design
  internal thread (G..)
  or flange (DN..)
- seawater-resistant design
  nipple with external thread (G..)
  or flange (DN..)

4.3 Raccorder les tubes du fluide caloporteur

Visser les tubes. S'assurer que les nipples à vis ne se tournent pas.

Filetage de raccord à vis (3) et (4):

- version standard
  filets intérieur (G..)
  ou bride (DN..)
- version marine
  Nipple avec filets extérieur (G..)
  ou bride (DN..)

	1 Ø	2 Ø	2a	3a 4 pass	3b 2 pass	4a 4 pass	4b 2 pass	5	9
K033N(B)	12L 1/2"	10L 3/8"	–	G 1/2	2 x G 1/2	G 1/2	G 3/4	–	–
K073H(B)	12L 1/2"	10L 3/8"	–	G 1/2	2 x G 1/2	G 1/2	G 3/4	–	–
K123H(B)	16L 5/8"	12L 1/2"	(1 1/4"-12 UNF)	G 1/2	2 x G 1/2	G 1/2	G 3/4	–	–
K203H(B)	16L 5/8"	16L 5/8"	(1 1/4"-12 UNF)	G 3/4	2 x G 3/4	G 3/4	G 1	–	–
K283H(B)	22L 7/8"	22L 7/8"	(1 1/4"-12 UNF)	G 3/4	2 x G 3/4	G 3/4	G 1	–	–
K373H(B)	28L 1 1/8"	22L 7/8"	(1 3/4"-12 UNF)	G 3/4	2 x G 3/4	G 3/4	G 1	–	–
K573H(B)	35L 1 3/8"	28L 1 1/8"	(1 3/4"-12 UNF)	G 1 1/4	G 2	G 1 1/4	G 2	G 1/4 (G 1/2)	–
K813H(B)	35L 1 3/8"	28L 1 1/8"	(1 3/4"-12 UNF)	G 1 1/4	G 2	G 1 1/4	G 2	G 1/4 (G 1/2)	–
K1053H(B)	42L 1 5/8"	35L 1 3/8"	(1 3/4"-12 UNF)	G 1 1/4	G 2	G 1 1/4	G 2	G 1/4 (G 1/2)	–
K1353T(B)	42L 1 5/8"	35L 1 3/8"	(1 3/4"-12 UNF)	G 1 1/4	G 2	G 1 1/4	G 2	G 1/4 (G 1/2)	–
K1973T(B)	54L 2 1/8"	42L 1 5/8"	(2 1/4"-12 UNF)	G 2	DN 65	G 2	DN 65	G 1/4 (G 1/2)	–
K2923T(B)	54L 2 1/8"	54L 2 1/8"	(112x112)	G 2	DN 65	G 2	DN 65	G 1/4 (G 1/2)	–
K3803T(B)	76L 3 1/8"	76L 3 1/8"	(140x140)	DN 80	DN 100	DN 80	DN 100	G 1/4 (G 1/2)	–
K4803T(B)	76L 3 1/8"	76L 3 1/8"	(140x140)	DN 80	DN 100	DN 80	DN 100	G 1/4 (G 1/2)	–
OW401(B)	22L 7/8"	22L 7/8"	–	G 3/4	2 x G 3/4	G 3/4	G 1	–	Ø10B
OW501(B)	22L 7/8"	22L 7/8"	–	G 3/4	2 x G 3/4	G 3/4	G 1	–	Ø10B
				6 pass	3 pass	6 pass	3 pass		
OW781(B)	28L 1 1/8"	28L 1 1/8"	–	G 1	2 x G 1	G 1	G 1 1/2	G 1/4 (G 1/2)	Ø10B
OW941(B)	35L 1 3/8"	35 1 3/8"	–	G 1	2 x G 1	G 1	G 1 1/2	G 1/4 (G 1/2)	Ø10B

1 Kältemittel- bzw. Öl-Eintritt
2 Kältemittel- bzw. Öl-Austritt
2a Alternativer Kältemittel-Austritt (nur bei Seewasser-Ausführung)
3 Kühlmedium-Eintritt
3a: 4 oder 6 pass / 3b: 2 oder 3 pass
4 Kühlmedium-Austritt
4a: 4 oder 6 pass / 4b: 2 oder 3 pass
5 Kühlmedium-Ablass
6 Anschluss für Manometer
7 Anschuss für Druckentlastungs-Ventil
Innengewinde 3/8"-18 NPTF
Außengewinde 1 1/4"-12 UNF
8 Schauglas
9 Ölablass-Ventil
10 Umlenkdeckel, abnehmbar
11 untere Befestigungs-Schiene
12 obere Befestigungs-Schiene

1 Refrigerant resp. oil inlet
2 Refrigerant resp. oil outlet
2a alternative refrigerant outlet (only for sea water version)
3 Coolant inlet
3a: 4 or 6 pass / 3b: 2 or 3 pass
4 Coolant outlet
4a: 4 or 6 pass / 4b: 2 or 3 pass
5 Coolant drain
6 Connection for pressure gauge
7 Connection for pressure relief valve
interneal thread 3/8"-18 NPTF
external thread 1 1/4"-12 UNF
8 Sight glass
9 Oil drain valve
10 End cover, removable
11 Fixing rail below
12 Fixing rail above

1 Entrée de fluide frigorigène resp. d'huile
2 Sortie de fluide frigorigène resp. d'huile
2a Sortie alternative de fluide frigorigène (seulement pour version marine)
3 Entrée de fluide caloporteur
3a: 4 ou 6 pass / 3b: 2 ou 3 pass
4 Sortie de fluide caloporteur
4a: 4 ou 6 pass / 4b: 2 ou 3 pass
5 Vidage de fluide caloporteur
6 Raccord du manomètre
7 Raccord du soupape de surpression
filet intérieur 3/8"-18 NPTF
filet extérieur 1 1/4"-12 UNF
8 Voyant
9 Vanne de vidage d'huile
10 Couvercle déflecteur, amovible
11 Rail de fixation en dessous
12 Rail de fixation en dessus

Anschlüsse **Connections** **Raccords**

K033N(B) .. K373H(B)

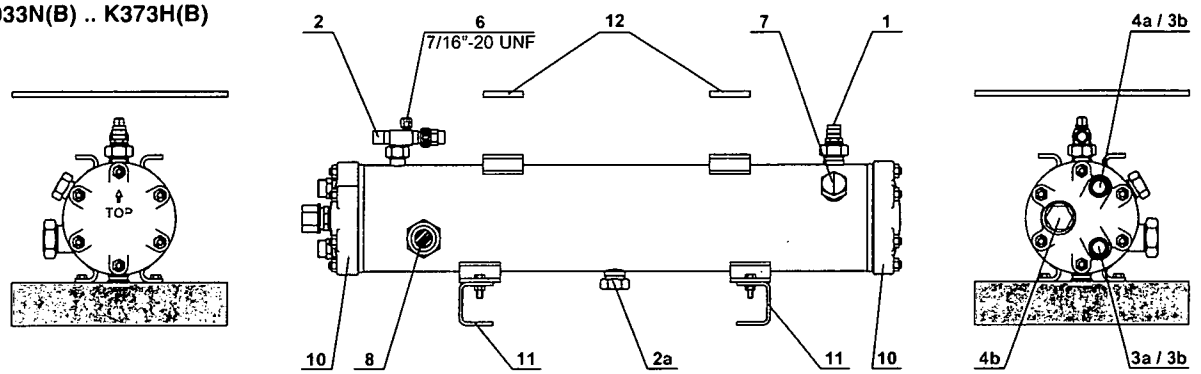

K573H(B) & K1053H

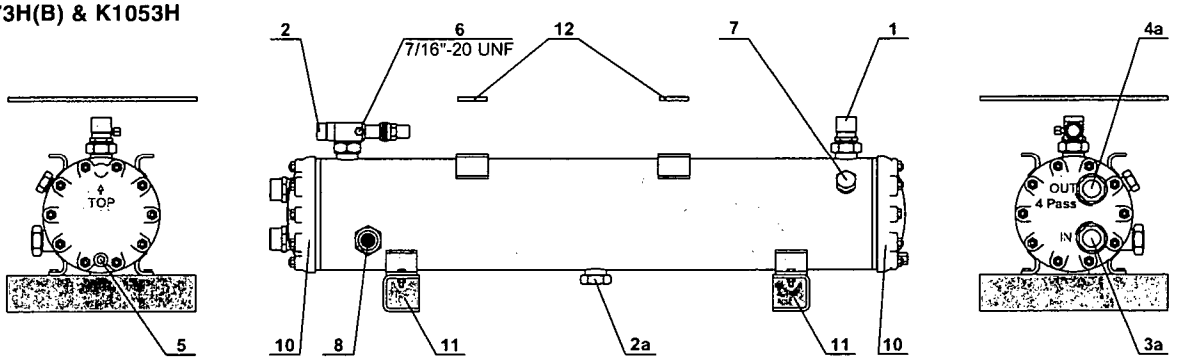

K1053HB &
K1353T(B) .. K4803T(B)

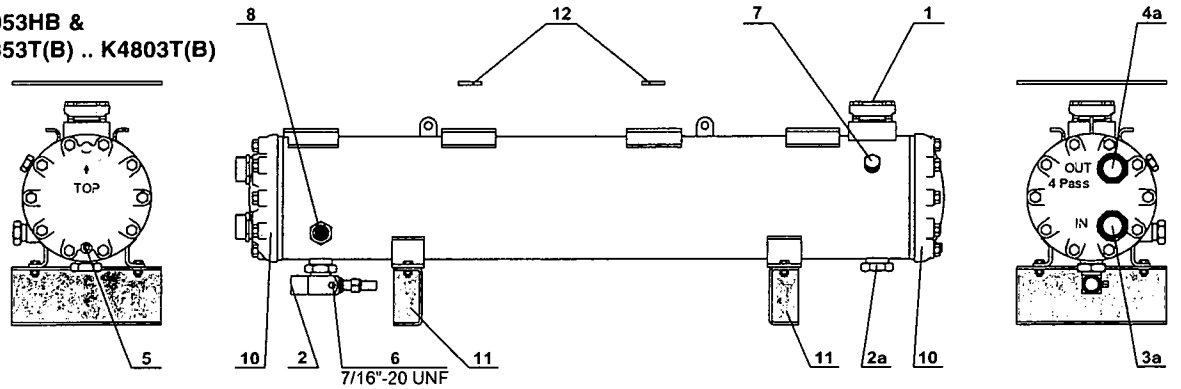

OW401(B) .. OW941(B)

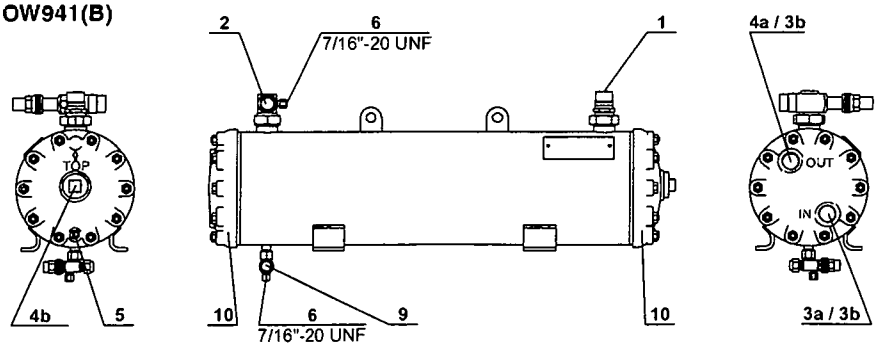

4.4 Kühlmedium-Durchgänge

Je nach Umlenkdeckel wird das Kühlmedium entweder 2, 3, 4 oder 6 mal durch den Druckbehälter geführt.

K573H(B) .. K4803T(B):
4-Pass-Deckel sind Standard mäßig montiert. Alternative: 2-Pass-Deckel

Bei allen anderen Geräten kann am gleichen Umlenkdeckel zwischen 4- oder 2- bzw. 6- oder 3-Pass gewählt werden. Dies hängt davon ab an welchen Positionen die Kühlmedium-Rohre montiert werden (Abb. 3).

4.4 Coolant passes

Depending on the end covers the coolant passes the pressure vessel 2, 3, 4, or 6 times.

K573H(B) .. K4803T(B):
4-pass end covers are monted as standard. Alternative: 2-pass end covers

At all other devices it can be choosen between 4 or 2 resp. 6 or 3 passes at the same end cover. This depends on which positions the coolant pipes are mounted (see fig. 3).

4.4 Passes du fluide caloporteur

Dépendent du couvercle déflecteur le fluide caloporteur passe le réservoir sous pression 2, 3, 4, ou 6 fois.

K573H(B) .. K4803T(B):
Couvercles à 4-pass sont standardement montés. Alternative: couvercles à 2-pass

Chez tous autres appareils on peut choisir entre 4 ou 2 resp. 6 ou 3 passages. Cela dépend auxquelles positions les tubes du fluide caloporteur sont montés (voir fig. 3).

K033N(B) .. K373H(B)
OW401(B) / OW501(B)

2 pass 4 pass

Abb. 3 Kühlmedium Anschuss-Positionen am Umlenkdeckel
K033N(B) .. K373H(B):
4- oder 2-Pass, je nach Anschluss am gleichen Deckel möglich
K573N(B) .. K4803T(B):
unterschiedliche Deckel für 4- oder 2-Pass
OW401(B) .. OW501(B):
4- oder 2-Pass, je nach Anschluss am gleichen Deckel möglich
OW781(B) .. OW861(B):
6- oder 3-Pass, je nach Anschluss am gleichen Deckel möglich

K573N(B) .. K4803T(B)

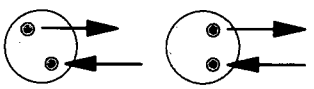

2 pass 4 pass

Fig. 3 Coolant connection positions at the end cover
K033N(B) .. K373H(B):
4 or 2 passes depending on connection at the same cover possible
K573N(B) .. K4803T(B):
different covers for 4 or 2 pass
OW401(B) .. OW501(B):
4 or 2 passes depending on connection at the same cover possible
OW781(B) .. OW861(B):
6 or 3 passes depending on connection at the same cover possible

OW781(B) / OW861(B)

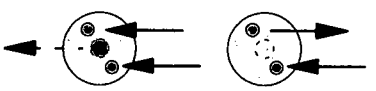

3 pass 6 pass

Fig. 3 Positions des raccords du fluide caloporteur au couvercle déflecteur
K033N(B) .. K373H(B):
4 ou 2 passages dépendant du raccord sur le même couvercle possible
K573N(B) .. K4803T(B):
couvercles différents pour 4 or 2 passages
OW401(B) .. OW501(B):
4 ou 2 passages dépendant du raccord sur le même couvercle possible
OW781(B) .. OW861(B):
6 ou 3 passages dépendant du raccord sur le même couvercle possible

5 In Betrieb nehmen

Der Druckbehälter wurde im Werk als einzelnes Gerät geprüft. Nach der Montage muss die Dichtheit der Anschlüsse und des Rohrleitungssystems erneut geprüft werden.

5.1 Dichtheit prüfen

Mit getrocknetem Stickstoff Überdruck erzeugen. Druckbehälter und Leitungen auf Lecks prüfen.

Gefahr!
Prüfdruck darf den maximal zulässigen Druck nicht überschreiten (siehe Typschild)!
Sicherheitsvorschriften unbedingt befolgen (z. B. EN 378 oder äquivalent).

5.2 Kältemittel einfüllen

- Bevor Kältemittel eingefüllt wird: Kühlmedium-Kreislauf in Betrieb nehmen. Das Kühlmedium könnte sonst einfrieren.
- Nur zugelassene Kältemittel einfüllen (siehe Kapitel 2).
- Flüssiges Kältemittel direkt in den Verflüssiger bzw. Sammler füllen, bei Systemen mit überflutetem Verdampfer evtl. auch in den Verdampfer.
- Nach Inbetriebnahme kann es notwendig werden, Kältemittel zu ergänzen:
  Bei laufendem Verdichter Kältemittel auf der Saugseite einfüllen, am besten am Verdampfer-Eintritt. Gemische müssen als blasenfreie Flüssigkeit dem Füllzylinder entnommen werden.

Gefahr!
Berstgefahr von Komponenten und Rohrleitungen durch hydraulischen Überdruck.
Überfüllung des Systems mit Kältemittel oder Öl unbedingt vermeiden!

5 Commissioning

The pressure vessels have been tested in the factory as individual units. After installation it is necessary to test again for any leaks of the connections and pipe work.

5.1 Leak testing

Test for leaks by pressurizing the presure vessel and pipes using dry nitrogen.

Danger!
Test pressure may not exceed the maximum allowable pressure (see name plate)!
Safety regulations have absolutely to be observed (e. g. EN 378 or equivalents).

5.2 Refrigerant charging

- Before refrigerant is charged: Put the coolant circuit into operation. Otherwise the coolant might freeze.
- Charge only permitted refrigerants (see chapter 2).
- Charge liquid refrigerant directly into the condenser resp. receiver. For systems with flooded evaporator possibly charge also into the evaporator.
- After commissioning it may be neccessary to add refrigerant:
  While the compressor is running, charge the refrigerant from the suction side, preferably at the evaporator inlet.
  Blends must be take from the charging cylinder as "solid liquid".

Danger!
Explosion risk of components and pipelines by hydraulic overpressure.
Avoid absolutely overcharging of the system with refrigerant or oil!

5 Mise en Service

Le réservoir sous pression a été contrôlé en usine en tant qu'appareil individuel. Après montage, l'étanchéité des raccords et du système de tuyauterie doit être recontrôlée.

5.1 Essai d'étanchéité

Créer une surpression avec de l'azote séché. Rechercher la présence de fuites dans le réservoir sous pression et la tuyauterie.

Danger !
Le timbrage ne doit pas excéder la pression maximale admissible (voir plaque d'identité) !
Exécuter absolument les prescriptions de sécurité (par ex. EN 378 ou équivalente).

5.2 Remplir le fluide frigorigène

- Avant le remplissage du fluide frigorigène:
  Mettre le circuit du fluide caloporteur en service, sinon celui-ci pourrait geler.
- Remplir seulement des fluides frigorigènes autorisés (voir chapitre 2).
- Remplir le fluide frigorigène liquide directement dans le condenseur resp. le réservoir de liquide. Pour les systèmes avec évaporateur noyé, le remplissage peut aussi se faire dans l'évaporateur.
- Après la mise en service, un appoint en fluide frigorigène peut s'avérer nécessaire: le compresseur étant en service, introduire le fluide frigorigène du côté aspiration, de préférence à l'entrée de l'évaporateur. Les mélanges doivent être retirées du cylindre de remplissage en phase liquide, sans bulles.

Danger !
Danger d'éclatement des composants et conduites par surpression hydraulique.
Eviter absolument suralimentation du système avec fluide frigorigène ou avec huile !

5.3 Kühlmedium

In der folgenden Tabelle ist der maximal zulässige Durchsatz an Kühlmedium aufgelistet. Dieser Wert bezieht sich auf sauberes und gasfreies Wasser mit einer Durchfluss-Geschwindigkeit von 2,5 m/s.

Der Druckbehälter kann mit gering feststoff- oder gasbelastetem Wasser bei einer Durchfluss-Geschwindigkeit bis ca. 1,5 m/s betrieben werden. Dazu müssen aus vergleichbaren Anwendungen positive Erfahrungen vorliegen.

Druckprobe / Probebetrieb

Bei geschlossenen Kühlmedium-Kreislauf sollte eine Druckprobe durchgeführt werden (maximaler Betriebsdruck 10 bar). Bei offenem Kreislauf genügt ein kurzer Probebetrieb.

Achtung – Korrosion!
Wenn die Anlage nach Druckprobe bzw. Probebetrieb längere Zeit stillsteht, müssen die Rohre vor Korrosion geschützt werden durch:

- Druckprobe mit sauberem Wasser oder trockenem Gas,
- Probebetrieb mit sauberem Wasser.

Wenn dies nicht möglich ist, müssen die Rohre gereinigt werden:
Rohre spülen und trocknen oder mit sauberem Wasser befüllen. Siehe auch Kapitel 6.1.

Einlauf-Zeit bei offenen Kühl-Kreisläufen (Korrosionsschutz)

Innerhalb der ersten Monate sollte der Druckbehälter ständig vom Kühlmedium durchströmt werden, damit sich eine Schutzschicht bilden kann.

Während Stillstandszeiten genügt ein geringer Durchfluss.

5.3 Coolant

The following table lists the maximum permitted coolant volume flow. These values refer to clean, gas-free water with a flow velocity of 2.5 m/s.

The pressure vessel can be operated with water containing a slight amount of solids or gases with a flow speed of up to about 1.5 m/s. However, positive experience must first have been gained from comparable applications.

Pressure test / Test operation

A pressure test should be carried out with a closed coolant circuit (maximum operating pressure: 10 bar). With an open circuit a short test run is sufficient.

Attention – Corrosion!
If the plant is not operated for a long time after pressure test resp. test run, the pipes must be protected against corrosion by:

- pressure test with clean water or dry gas,
- test run with clean water.

If this is not possible, the pipes must be cleaned:
Flush pipes and dry them or fill them with clean water. See also chapter 6.1.

Running-in time with open cooling circuits (corrosion protection)

Within the first months coolant should constantly flow through the pressure vessel so that a protective layer can form.

While inoperative a low flow rate is sufficient.

5.3 Fluide caloporteur

Dans le tableau ci-après, sont indiqués les débits de fluide caloporteur maximaux admissibles. Ces valeurs se réfèrent à de l'eau propre et sans gaz ayant une vitesse de passage de 2,5 m/s.

Le réservoir sous pression peut être utilisé avec de l'eau faiblement "chargée" en corps solides et en gaz pour une vitesse de passage jusqu'à 1,5 m/s. Pour ceci, il faut disposer de résultats probants obtenus dans des conditions similaires.

Essai de pression / Mise en service d'essai

Dans les cas d'un circuit fermé, il est souhaitable de procéder à un essai de pression (pression de service maximale 10 bar). Dans le cas d'un circuit ouvert, une courte mise en service d'essai suffit.

Attention – Corrosion !
Si l'installation reste assez longtemps à l'arrêt après l'essai de pression / la mise en service d'essai, les tubes doivent être protégés contre la corrosion par:

- essai de pression avec de l'eau propre ou un gaz sec,
- mise en service d'essai avec de l'eau propre.

Si ceci n'est pas possible, les tubes doivent être nettoyés:
Rincer et sécher les tubes ou les remplir avec de l'eau propre. Voir également chapitre 6.1.

Temps de mise en œuvre pour les circuits ouverts (protection anticorrosion)

Durant les premiers mois, le fluide caloporteur devrait circuler en permanence à travers le réservoir sous pression. Une couche de protection peut ainsi se former.

Un faible débit suffit durant les périodes d'arrêt.

Verflüssiger — Condensers — Condenseurs

Typ / Type / Type	Behälter-Inhalt (Kühlmedium) Receiver volume (coolant) Contenance de rés. (fluide caloporteur)	2 Pass			4 Pass		
		max. Durchsatz max. flow Quantité passée max.		Druckabfall Pressure drop Perte de pression	max. Durchsatz max. flow Quantité passée max.		Druckabfall Pressure drop Perte de pression
	dm^3 (l)	l/s	m^3/h	bar	l/s	m^3/h	bar
K033N	0,4	0,38	1,37	0,11	0,19	0,68	0,22
K073H	0,7	0,76	2,74	0,11	0,38	1,37	0,22
K123H	0,9	0,76	2,74	0,15	0,38	1,37	0,28
K203H	1,8	1,78	6,41	0,33	0,89	3,20	0,64
K283H	2,1	2,38	8,56	0,33	1,19	4,28	0,64
K373H	3,1	2,98	10,71	0,40	1,49	5,35	0,78
K573H	5,8	5,09	18,32	0,30	2,31	8,33	0,59
K813H	7,0	6,48	23,32	0,30	3,24	11,66	0,58
K1053H	9,3	6,48	23,32	0,38	3,24	11,66	0,74
K1353T	11,5	8,33	30,00	0,38	4,17	15,00	0,74
K1973T	18,8	12,03	43,32	0,38	6,02	21,66	0,74
K2923T	25,0	17,56	63,22	0,38	8,78	31,61	0,74
K3803T	37,4	23,17	83,40	0,38	11,58	41,70	0,74
K4803T	45,0	29,64	106,70	0,39	14,83	53,40	0,75
K033NB	0,4	0,38	1,38	0,10	0,19	0,69	0,22
K073HB	0,7	0,76	2,75	0,11	0,38	1,38	0,22
K123HB	0,9	0,76	2,75	0,14	0,38	1,37	0,28
K203HB	1,8	1,78	6,42	0,32	0,89	3,21	0,64
K283HB	2,1	2,38	8,56	0,32	1,89	4,28	0,64
K373HB	3,1	2,97	10,71	0,39	1,49	5,35	0,78
K573HB	5,8	5,09	18,32	0,30	2,31	8,33	0,59
K813HB	7,0	6,48	23,34	0,29	3,24	11,66	0,58
K1053HB	9,3	6,48	23,34	0,37	3,24	11,66	0,74
K1353TB	11,5	8,33	30,00	0,37	4,17	15,00	0,74
K1973TB	18,8	12,04	43,33	0,37	6,02	21,66	0,74
K2923TB	25,0	17,56	63,22	0,37	8,78	31,61	0,74
K3803TB	37,4	23,17	83,40	0,37	11,58	41,70	0,74
K4803TB	45,0	29,64	106,80	0,37	14,83	53,40	0,75

Ölkühler — Oil coolers — Refroidisseurs d'huile

Typ / Type / Type	Beh.-Inhalt (Kühlmed.) Res. volume (coolant) Contenance (fl. calop.)	Öltemp. (Eintritt) Oiltemp. (inlet) Temp. d'huile (entrée)	max. Durchsatz [m^3/h] und Druckabfall [bar] bei Kühlmedium-Eintritts- / Austritts-Temperatur max. flow [m^3/h] and pressure drop [bar] with coolant inlet and outlet temperature Quantité passée max. [m^3/h] et perte de pression [bar] à temp. entrée / sortie fluide caloporteur											
			15°C / 25°C			**27°C / 32°C ***			**40°C / 50°C**			**50°C / 60°C**		
	dm^3 (l)	°C	l/s	m^3/h	bar	l/s	m^3/h	bar	l/s	m^3/h	bar	l/s	m^3/h	bar
OW401(B)	2,2	80	0,42	1,5	0,13	0,61	2,2	0,04	0,19	0,7	0,03	0,11	0,4	0,02
		100	0,58	2,1	0,25	1,00	3,6	0,1	0,39	1,4	0,12	0,28	1,0	0,06
OW501(B)	2,6	80	0,53	1,9	0,24	0,81	2,9	0,08	0,25	0,9	0,06	0,14	0,5	0,03
		100	0,75	2,7	0,45	1,33	4,8	0,2	0,50	1,8	0,22	0,11	1,4	0,13
OW781(B)	4,5	80	0,75	2,7	0,13	1,14	4,1	0,04	0,36	1,3	0,03	0,19	0,7	0,01
		100	1,06	3,8	0,25	1,81	6,5	0,1	0,69	2,5	0,12	0,55	2,0	0,07
OW941(B)	5,4	80	1,00	3,6	0,28	1,53	5,5	0,09	0,47	1,7	0,07	0,28	1,0	0,02
		100	1,42*	5,1*	0,1*	2,44	8,8	0,22	0,92	3,3	0,22	0,72	2,6	0,15

Standard 4- oder 6-Pass
* 2- oder 3-Pass

Standard 4 or 6 pass
* 2 or 3 pass

Standard 4 ou 6 pass
* 2 ou 3 pass

6 Betrieb

Der Druckbehälter muss regelmäßig von einem Sachkundigen geprüft werden. Die Prüfintervalle sind von Kältemittel, Kühlmedium und Betriebsweise abhängig. Sie müssen vom Betreiber festgelegt werden.

6.1 Stillstand

Achtung – Korrosion!
Während des Stillstands die Kühlmedium-Seite des Druckbehälters vor Korrosion schützen!
Insbesondere bei aggressiven Kühlmedien z. B. Brackwasser, Feststoff-belastetes oder Bio-Fouling-anfälliges Wasser

Außer Betrieb nehmen

Verschmutzungen des Kühlmedium-Rohrsystems sollten vor längeren Stillstandszeiten entfernt werden. Dies gilt insbesondere für organische Stoffe und Muschelbefall. Siehe hierzu Kapitel 6.2.

Bei aggressiven Kühlmedien muss das Rohrsystem gereinigt und anschließend getrocknet oder mit sauberem Wasser befüllt werden.

6 Operation

The pressure vessel must be regularly inspected by authorized personnel. The inspection intervals depend on refrigerant, cooling agent and mode of operation. They must be determined by the end user.

6.1 Standstill

Attention – Corrosion!
While not operating, the coolant side of the pressure vessel must be protected against corrosion. This applies especially with aggressive coolants, e.g. brackish water, water containing solids or liable to bio-fouling.

Decommissioning

Any contamination of the coolant pipe system should be removed before any long periods of non-operation. This applies especially in cases of organic materials and shell deposits. See chapter 6.2.

With aggressive or corrosive coolants, the pipe system must be cleaned and dried or filled with clean water.

6 Fonctionnement

Le réservoir sous pression doit être contrôlé régulièrement par une personne compétente. La périodicité des contrôles dépend du fluide frigorigène, du fluide caloporteur et du mode d'exploitation. Elle doit être déterminée par l'exploitant.

6.1 Arrêt

Attention – Corrosion !
Durant les périodes d'arrêt, le côté fluide caloporteur du réservoir sous pression doit être protégé contre la corrosion.
Notamment pour les fluides caloporteurs agressifs comme par ex. eau saumâtre, eau chargée en corps solides ou soumise au bio-fouling.

Mise hors service

Les dépôts dans le système tubulaire du fluide caloporteur doivent être retirés avant les arrêts prolongés. Sont concernés avant tout les dépôts organiques et les formations de coquillages. Voir pour celà chapitre 6.2.

Pour les fluides caloporteurs agressifs, il est recommandé de nettoyer le système tubulaire puis de le sécher ou de le remplir avec de l'eau propre.

6.2 Wartung

Die Druckbehälter sind für wartungsfreien Betrieb ausgelegt. Dennoch ist es ratsam, die Rohre des Kühlmediums regelmäßig zu reinigen. Ihre Verschmutzung ist direkt von der Qualität des verwendeten Kühlmediums abhängig.

- In den Rohren können sich gelöste oder feste Bestandteile des Kühlmediums absetzen wie Kalk, Sand, Algen oder Schlick.
- Organische Stoffe z. B. Algen können Lokalelemente bilden. Daraus kann im schlimmsten Fall Lochfraß entstehen.
- Bei Meerwasser-Kühlung können auch innen auf die Rohre Muscheln aufwachsen.

6.2 Maintenance

The pressure vessels are designed for maintenance-free operation. However, it is advisable to clean the coolant pipes regularly. The contamination depends directly on the quality of the coolant used.

- Materials in the coolant in dissolved or solid form can be deposited in the pipes, e.g. lime, sand, algae or silt.
- Organic materials such as algae can build up local elements. In the worst case this can lead to pitting.
- With seawater cooling, shells can also grow on the insides of the pipes.

6.2 Maintenance

Les réservoirs sous pression sont dimensionnés pour un service sans entretien. Il est cependant recommandé de nettoyer régulièrement les tubes du fluide caloporteur. L'encrassement est en rapport direct avec la qualité du fluide caloporteur utilisé.

- Des composants solides ou dissous dans le fluide caloporteur tels que chaux, sable, algues ou limon peuvent se déposer sur les tubes.
- Des substances organiques telles que les algues peuvent constituer des éléments locaux. Dans le cas extrême, une corrosion localisée peut apparaître (piqûres).
- Avec le refroidissement par eau de mer, des coquillages peuvent se développer à l'intérieur des tubes.

Reinigung

Warnung!
Kühlmedium kann unter Überdruck stehen!
Schwere Verletzungen möglich.
Zuerst auf drucklosen Zustand bringen!

Warnung!
Kühlmedium kann Haut und Augen verätzen!
Schutzbrille tragen!

Die geeignete Reinigungsmethode und die Reinigungs-Intervalle sind von Art und Grad der Verschmutzung abhängig.

Achtung!
Reinigungsmittel darf das Rohrmaterial nicht angreifen!

- Weiche Ablagerungen
  z. B. Algen, Schlick:
  Vorsichtig abbürsten. Ggf Reinigungsmittel verwenden.
  Anschließend gut durchspülen.
- Feste Beläge z. B. Kalk, Muscheln:
  Spülen mit geeignetem Lösungsmittel.

  Sehr wirkungsvoll und Umwelt freundlich ist die Verwendung von Zitronensäure:
  - Mit einer wässrigen Lösung aus 25-prozentiger Zitronensäure befüllen.
  - 24 Stunden einwirken lassen. Gelegentliches Umpumpen verstärkt die Wirkung.
  - Anschließend die gelösten Stoffe aus dem Druckbehälter herausspülen.

Verunreinigtes Kühlmedium Umwelt gerecht entsorgen!

Cleaning

Warning!
Coolant can be under pressure!
Severe injuries possible.
Release the pressure first!

Warning!
Coolant can burn the skin and eyes!
Wear safety goggles!

Suitable cleaning methods and cleaning intervals depend on the type and extent of contamination.

Attention!
Cleaning agents must not react with the pipe material!

- Soft deposits
  such as algae or silt:
  Brush off carefully. Use cleaning agent if necessary.
  Rinse well afterwards.
- Solid coatings such as lime or shells:
  Rinse with suitable solvent.

  The use of citric acid is very effective and environmentally friendly:
  - Fill with a 25% citric acid / water solution.
  - Allow to react for 24 hours. Occasional circulation by pumping increases the effect.
  - Afterwards, flush the released materials out of the pressure vessel.

Dispose of contaminated coolant properly!

Nettoyage

Avertissement !
Fluide caloporteur peut être en sur pression !
Graves blessures possibles.
D'abord évacuer la pression !

Avertissement !
Fluide caloporteur peut provoquer des brûlures aux yeux et à la peau !
Porter des lunettes de protection !

La méthode de nettoyage appropriée et la périodicité du nettoyage dépendent du type et du degré d'encrassement.

Attention !
Le produit de nettoyage ne doit pas attaquer le matériau des tubes !

- Dépôts mous
  comme par ex. algues, limon:
  Retirer prudemment à la brosse.
  Utiliser éventuellement un produit de nettoyage.
  Rincer ensuite abondamment.
- Dépôts solides
  comme par ex. chaux, coquillages:
  Rincer avec un produit dissolvant approprié.

  L'emploi d'acide citrique est très efficace et non polluant:
  - Remplir avec une solution aqueuse composé de 25% d'acide citrique.
  - Laisser agir pendant 24 heures. Un transvasement occasionnel renforce l'efficacité.
  - Rincer le réservoir sous pression pour en retirer les composants dissous.

Le fluide caloporteur contaminé devra être recyclé de façon adaptée !

6.3 Kältemittel absaugen

bei Reparatureingriffen oder Außer-Betriebnahme der Verflüssiger

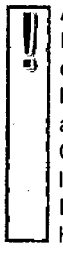

Achtung – Einfriergefahr!
Es muss sichergestellt sein, dass die Siedetemperatur des Kältemittels zu jedem Zeitpunkt ausreichend oberhalb dem Gefrierpunkt des Kühlmediums liegt.
Dazu unbedingt folgende Hinweise beachten:

Kältemittel möglichst flüssig absaugen oder abpumpen. Siedetemperatur des Kältemittels überwachen. Sie darf beispielsweise beim Kühlmedium Wasser nicht unter 4°C fallen.

Wird das Kältemittel gasförmig abgesaugt, muss zusätzlich der Kreislauf des Kühlmediums in Betrieb sein. Die Temperatur des Kühlmediums muss am Absaugort überwacht und ggf. entsprechend erhöht werden.

Kältemittel Umwelt gerecht entsorgen.

6.3 Extracting refrigerant

for repair work at the condensers or when decommissioning them

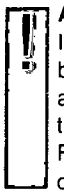

Attention – Danger of freezing!
It is necessary to ensure that the boiling point of the refrigerant is at all times high enough above the freezing point of the coolant. For this reason it is essential to observe the following points:

Pump-off refrigerant as a liquid if possible. Monitor the boiling point of the refrigerant. With water as a coolant, for example, it may not fall below 4°C.

If the refrigerant is extracted as a gas, the coolant circuit must also be in operation. The temperature of the coolant must be monitored where the refrigerant is sucked off and increased if necessary.

Dispose of the refrigerant properly.

6.3 Retrait du fluide frigorigène

en vue d'une réparation ou de la mise hors service des condenseurs

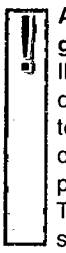

Attention – Risque de prise en glace !
Il faut s'assurer que la température d'ébullition du fluide frigorigène est toujours suffisamment plus élevée que le point de gel du fluide caloporteur.
Tenir toujours compte des points suivants:

Si possible, aspirer ou pomper le fluide frigorigène en phase liquide. Surveiller la température d'ébullition du fluide frigorigène. Si le fluide caloporteur est de l'eau, elle ne doit pas chuter en-dessous de 4°C.

Si le fluide frigorigène est aspiré en phase gazeuse, le circuit du fluide caloporteur doit être en service. La température du fluide caloporteur doit être surveillée au point d'aspiration et rehaussée le cas échéant.

Recycler le fluide frigorigène de façon adaptée.

6.4 Öl ablassen

bei Reparatureingriffen oder außer Betrieb nehmen der Ölkühler

Anlage ausschalten. Wenn möglich Kältemittel- und Öl-Leitungen vor und hinter dem Ölkühler absperren.

Warnung!
Ölkühler kann unter Druck stehen!
Schwere Verletzungen möglich.
Ölkühler zuerst auf drucklosen Zustand bringen!
Schutzbrille tragen!

Wanne bereit halten. Öl am Ölablass-Ventil ablassen (Pos. 9 Seite 11). Öl auffangen und Umwelt gerecht entsorgen.
Chlorhaltiges Öl ist Sondermüll.

6.4 Draining the oil

for repair work at the oil coolers or when decommissioning them

Switch off the plant. If possible shut off the refrigerant pipes and oil pipes before and behind the oil cooler.

Warning!
Oil cooler can be under pressure!
Severe burns possible.
Release the pressure in the oil cooler!
Wear safety goggles!

Take an oil pan ready. Drain the oil at the oil drain valve (pos. 9 page 11). Collect the oil and dispose of it properly.
Chlorinated oil is pollutive waste.

6.4 Vider l'huile

en vue d'une réparation ou de la mise hors service des refroidisseurs d'huile

Mettre l'installation hors de service. Si possible, fermer les tuyaus de fluide frigorigène et de l'huile devant et derrière le refroidisseur d'huile.

Avertissement !
Le refroidisseur d'huile peut-être sous pression !
Graves blessures possible.
Retirer la pression sur le refroidisseur d'huile premièrement !
Porter des lunettes de protection !

Tenir prête une gouttière à l'huile. Vider l'huile à la vanne de vidage d'huile (pos. 9 page 11). Recueillir l'huile et recycler la de façon adaptée.
Les huiles chlorées unsées sont des déchets pollués.

6.5 Außer Betrieb nehmen

Im Schadensfall muss der Druckbehälter vom Kältesystem getrennt und ausgetauscht werden. Dazu Kältemittel absaugen und Kühlmedium entfernen.

Verunreinigte Stoffe Umwelt gerecht entsorgen!
Chlorhaltiges Öl ist Sondermüll.

6.5 Decommissioning

In the case of damage the pressure vessel must be disconnected from the refrigeration system and replaced. For this purpose the refrigerant and the coolant must be removed.

Dispose of contaminated fluids properly!
Chlorinated oil is pollutive waste.

6.5 Mise hors service

En cas de sinistre, le réservoir sous pression doit être déconnecté du système frigorifique et remplacé. Pour celà, il faut retirer le fluide frigorigène et le fluide caloporteur.

Les fluides contaminés devront être recyclé de façon adaptée !
Les huiles chlorées unsées sont des déchets pollués.

Bitzer Kühlmaschinenbau GmbH
Eschenbrünnlestr. 15
71065 Sindelfingen (Germany)
Tel. +49(0)7031-932-0
Fax +49(0)7031-932-146 & -147
email: bitzer@bitzer.de • www.bitzer.de

Änderungen vorbehalten / Subject to change / Toutes modifications réservées 04.04 901-01

NORGREN B01, B07, B08, B11, B15, B39, B64, B68, B72, B73, B74

GENERAL PURPOSE AND OIL REMOVAL FILTER/REGULATORS (ENGLISH)

Contact your Norgren supplier for complete instructions and kits.

Installation - Shut off air pressure. Install in air line:

- vertically (bowl down),
- with air flow in direction of arrow on body,
- upstream of lubricators and cycling valves,
- as close as possible to the device being serviced.
- Make sure bowl and bowl guard if so equipped are turned fully clockwise into body before pressurizing.

Servicing

1. Keep accumulated liquids below baffle on general purpose units and below element on oil removal units.
2. Replace filter element when dirty.

Adjustment - Turn adjustment clockwise to increase and counterclockwise to decrease outlet pressure setting. To reduce pressure, first reduce to a pressure less than that desired, then increase to the desired outlet pressure.

Warning

These products are intended for use in industrial compressed air systems only. Do not use these products where pressures and temperatures can exceed those listed on the product label.

Polycarbonate plastic bowls can be damaged and possibly burst if exposed to such substances as certain solvents, strong alkalies, compressor oils containing ester-based additives or synthetic oils. Fumes of these substances in contact with the polycarbonate bowl, externally or internally, can also result in damage. Clean with warm water only.

Use metal bowl in applications where a plastic bowl might be exposed to substances that are incompatible with polycarbonate.

If outlet pressure in excess of the filter/regulator pressure setting could cause downstream equipment to rupture or malfunction, install a pressure relief device downstream of the filter/regulator. The relief pressure and flow capacity of the relief device must satisfy system requirements.

Before using with fluids other than air, for nonindustrial applications, or for life support systems, consult Norgren.

Water vapor will pass through these units and will condense into liquid if air temperature drops in the downstream system. Install an air dryer if water condensation could have a detrimental effect on the application.

FILTRI-REGOLATORI PER IMPIEGHI GENERICI E RIMOZIONE OLIO (ITALIAN)

Contattare il Vostro fornitore Norgren per istruzioni complete e ricambi.

Installazione- Togliere la pressione dell'aria. Posizione sulla linea:

- Verticale (tazza in basso),
- Con il flusso aria in direzione della freccia riportata sul corpo,
- A monte dei lubrificatori e delle valvole di controllo,
- Il più vicino possibile all'apparecchio che deve essere alimentato,
- Accertarsi che la tazza e relativa protezione, se fornite, vengano montate al corpo avvitandole completamente in senso orario, prima di dare pressione.

Manutenzione

1. Mantenere i liquidi accumulati al di sotto dello schermo sui filtri per impieghi generici e sotto l'elemento sulle unità per rimozione olio.
2. Sostituire l'elemento filtrante quando sporco.

Regolazione - Girare il dispositivo di regolazione in senso orario per aumentare e in senso antiorario per diminuire la pressione ditaratura. Per ridurre la pressione, prima di tutto portarla al di sotto del valore desiderato, poi aumentarla fino al valore richiesto.

Avvertenze

Questi prodotti sono adatti esclusivamente all'impiego su sistemi industriali ad aria compressa. Non impiegare in presenza di pressioni e temperature superiori a quelle riportate sulla targhetta.

Le tazze in policarbonato possono venire danneggiate od esplodere se esposte ad alcune sostanze come solventi, alcali concentrati, oppure oli per compressore contenenti additivi od oli sintetici. I fumi di queste sostanze a contatto con la tazza in policarbonato, esternamente o internamente, possono risultare altrettanto dannosi. Pulire esclusivamente con acqua tiepida.

Adottare la tazza metallica in applicazioni nelle quali la tazza in plastica potrebbe essere esposta a sostanze incompatibili con il policarbonato.

Se un aumento della pressione in uscita rispetto al valore di taratura dovesse causare rotture o malfunzionamento nell'impianto a valle, installare una valvola limitatrice di pressione a valle del regolatore. La pressione e la capacità di scarico della valvola limitatrice devono soddisfare i requisiti di sicurezza del sistema.

Prima dell'impiego con altri fluidi che non siano aria, per applicazioni non industriali, o in apparecchiature medicali consultare la Norgren.

Se dovesse verificarsi un abbassamento di temperatura nel sistema a valle, il vapore acqueo passato attraverso queste unità si condenserebbe in liquido. Installare un essicatore se la presenza di acqua dovesse avere effetti negativi sull'applicazione.

FILTROS/REGULADORES REMOVEDORES DE ÓLEO E PARA APLICAÇÕES GERAIS (PORTUGUESE)

Consulte seu fornecedor Norgren para instruções completas e kits de reparo.

Instalação - Desligue a pressão de ar. Instale na linha de ar:

- Verticalmente (copo para baixo),
- Com o fluxo de ar na direção da seta no corpo,
- Antes dos lubrificadores e válvulas de controle direcional,
- Tão próximo quanto possível do dispositivo que está sendo atendido,
- Certifique-se que o reservatório e o protetor do reservatório, se equipados, girem completamente no sentido horário dentro do corpo, antes de pressurizar.

Manutenção -

1. Mantenha os líquidos acumulados abaixo do defletor nas unidades de aplicações gerais e abaixo do elemento filtrante nas unidades de remoção de óleo.
2. Substitua o elemento filtrante quando sujo.

Regulagem - Gire ajustando para aumentar/diminuir a a pressão primária estabelecida. Para reduzir a pressão, primeiro reduza-a para um valor menor do que desejado e posteriormente aumente até a pressão final.

Advertências

Estes produtos devem ser usados somente em sistemas de ar comprimido industrial. Não os use onde pressões e temperaturas excederem aqueles listados nas etiquetas dos produtos.

O copo de policarbonato pode ser danificado e possivelmente rompido se exposto a susbstâncias tais como certos solventes, substâncias alcalinas, óleos de compressor contendo aditivos com base em ésteres ou óleos sintéticos. Vapores destas substâncias em contato com o copo de policarbonato, externa ou internamente, podem danificá-lo. Limpe somente com água morna.

Use copo de metal em aplicações onde o copo transparente possa ser exposto a produtos a produtos incompatíveis com o policarbonato.

Se a pressão de saída for superior à estabelecida podendo causar danos ao equipamento, instale um dispositivo de alívio de pressão após o regulador, que atenda aos requisitos do sistema.

Antes de usar outros fluidos para aplicações não indutriais ou para sistemas de suporte à saúde, consulte a Norgren.

Vapor de água poderá passar através dessas unidades e condensar posteriormente quando a temperatura do ar cair. Instale um secador de ar se a condensação de água prejudicar a aplicação.

FILTRO/REGULADORES DE USO GENERAL Y DE ELIMINACION DE ACEITE (SPANISH)

Contacte con su proveedor Norgren para instrucciones completas y kits.

Instalación - Cerrar la presión de aire, instalar en la línea del aire:

- verticalmente (con el depósito hacia abajo)
- el caudal de aire deberá seguir la dirección de la marca en el cuerpo
- situarlo antes de lubricadores y válvulas de ciclo
- lo más cerca posible del aparato al que está conectado
- asegurarse de que el depósito y el protector del depósito (en caso de haberlo) están totalmente girados en la dirección de las agujas del reloj dentro del cuerpo antes de presurizar

Mantenimiento

1. Mantener los líquidos acumulados por debajo del deflector en unidades de uso general, y por debajo del elemento filtrante en unidades de eliminación de aceite
2. Substituir el elemento filtrante cuando esté sucio.

Regulación - Girar el pomo de regulación en el sentido de las agujas del reloj para aumentar el nivel de presión de salida y en sentido contrario para reducirla. Para disminuir la presión, reducir en primer lugar a un nivel inferior al requerido; después aumentar hasta la presión de salida deseada.

Advertencia

Estos productos se han diseñado para su uso exclusivamente en sistemas industriales de aire comprimido. No usar estos productos en instalaciones en las que las presiones y temperaturas puedan superar las que figuran en la etiqueta del producto.

El depósito de plástico de policarbonato puede resultar dañado y posiblemente explotar si es expuesto a sustancias tales como disolventes, productos alcalinos fuertes, aceites de compresor con aditivos formulados con esteres o aceites sintéticos. Los humos de estas sustancias en contacto con el depósito de policarbonato, ya sea a nivel interno o externo, podrían ser asimismo perjudiciales. Limpiar sólo con agua caliente.

Usar un depósito metálico en aplicaciones en las que el depósito de plástico pueda ser expuesto a sustancias incompatibles con el policarbonato.

Si la presión de salida es superior al nivel de presión del regulador, podrían producirse roturas o fallos en los equipos situados después del mismo. En este caso, instalar un aparato con escape de presión después del filtro/regulador. La capacidad en cuanto a presión de escape y caudal del mecanismo de descarga deberá satisfacer las necesidades del sistema.

Consultar con Norgren antes de utilizar estos productos con otros fluidos que no sean el aire, en aplicaciones no industriales o en sistemas de seguridad.

Por estas unidades circulan vapores de agua que se podrían condensar en forma líquida en la parte inferior a medida que desciende la temperatura del aire. Instalar un secador de aire en caso de que la condensación de agua pueda perjudicar la aplicación.

詳細及びキットに関しては供給元にお問い合わせ下さい。

取付方法：
●空気圧力を閉じます。
●空気配管に垂直で、ボウルを下に向けて取付けます。
●本体上の矢印に気流方向を合わせます。
●インジケータ、バルブの一次側に取付。
●使用する機器に出来るだけ近い位置に取付けます。
●圧力をかける前に、ボウルとボウルガードを右回りに回し、完全な締め付けを確認ください。

メンテナンス：
汎用の場合はバッフルの下に、油除去の場合はエレメントの下に、液体をためます。フィルタがよごれたら取り替えてください。

調整：
圧力設定を上げるには調整ノブを時計方向に、圧力設定下げるには反時計方向に回します。高い設定値から低い設定値に変更する場合は、目的の圧力よりも低く下げた後、目的の圧力値まで上げるようにして下さい。

注意事項：
当該製品は工業用圧縮空気システムのみ使用できるように作られています。製品ラベル記載以外の温度、圧力では使用出来ません。

ポリカーボネイト製プラスチックボウルはある種の溶剤、強アルカリ性剤、エステル性添加物を含むコンプレッサ用油、あるいは合成油に接触すると、破損又は破裂する恐れがあります。又これらの物質から出るガスがポリカーボネイト性ボウルの内部又は外部と接触すると、破損することがあります。清掃には温湯のみ使用して下さい。

ポリカーボネイト製プラスチックに適さない物質に接触する恐れがある場合は、金属製ボウルを使用して下さい。

出力圧力がフィルタ／レギュレータの設定圧力を超え、フィルタ／レギュレータの二次側にある機器が壊れたり作動不良が生じる恐れがある場合は、フィルタ／レギュレータの二次側にリリーフバルブを取付けて下さい。減圧装置の減圧および流量はシステムの要求値に合わせなければなりません。

空気以外の媒体や工業用以外の用途、又は生命維持システムに当該製品を使用する場合は、ノルグレン社までお問い合わせ下さい。

水蒸気が本機器内を通り、空気温度低下に伴い凝縮して水になることがあります。この現象が機器を痛める恐れがある場合は、エアードライヤーを取付けて下さい。

通用和精细过滤器/减压阀

需维修配件和全部使用说明，请与诺冠供应商联係.

安装

先关闭气路，然後安装本产品于气路.

- 置机体于竖直位置，滤杯在下部.
- 气体流向与机体上的箭头指向一致.
- 置于油雾器和循环阀之前.
- 尽量接近所服务的设备.
- 接通气压之前，确保滤杯和护罩已完全顺时针旋入机体.

维护

1. 通用过滤器杯中积液不得超过滤芯底置，精细过滤器杯中积液不得超过滤芯下沿.
2. 及时更换变脏的滤芯.

调节 - 顺时针转动以增大压力，逆时针转动以降低压力. 降低压力时，先将压力降所需压力之下，然後调高压力至所需压力.

警告

本产品仅限用于工业压缩空气系统，请勿在超出产品标牌所示的压力和温度范围之外使用.

透明聚脂滤杯接触到某些溶剂，强碱，含酯添加物的压缩机油以及合成机油时，可能会受损甚至爆裂. 当聚脂滤杯从内部或外部接触上述物质的气体时，也会损坏. 请只用温水清洗滤杯.

当有与聚脂滤杯不相容的物质存在时，请使用金属滤杯.

如果输出压力超过设定压力会导致下游的设备失灵或爆裂，则应在本产品的下游安装安全阀. 安全阀的溢流压力和流量必须满足系统的要求.

欲将本产品用于空气以外的流体，非工业用途或医疗设备，请先与诺冠接洽.

水蒸汽能通过本产品，当下游温度低于水凝结温度时，可形成凝结水. 若凝结水对设备不利，请使用空气乾燥器.

FILTERREGLER (GERMAN)
Verschleißteilsätze und ausführliche Hinweise erhalten Sie von Norgren.
Einbau
- Luftzufuhr abstellen.
- In vertikaler Lage (Behälter nach unten) einbauen.
- Flußrichtungspfeile am Gehäuse beachten.
- Vor Ölern und Wege-Ventilen installieren.
- Filterregler so nah wie möglich bei den zu versorgenden Geräten einbauen.
- Vor Inbetriebnahme Behälter und Schutzkorb bis zum Anschlag bzw. Dichtsitz einschrauben.

Wartung
1. Die gesammelten Verunreinigungen müssen unterhalb von Filterelement und Trennkappe (Standard-Filter) bleiben.
2. Filterelement austauschen, falls verschmutzt:

Einstellung
Drehen im Uhrzeigersinn erhöht den Sekundärdruck. Ein neuer niedriger Sekundärdruck wird in zwei Schritten eingestellt. Zunächst unter den gewünschten Druckwert reduzieren. Dann auf den gewünschten Sekundärdruck erhöhen.
Sicherheitshinweise
Die Produkte sind nur für den Einsatz in industriellen Druckluftsystemen geeignet. Die Wartungsgeräte nicht außerhalb der angegebenen Betriebsbedingungen (siehe „Technische Merkmale"), z.B. Druck und Temperatur einsetzen.
Kunststoffbehälter können beschädigt werden oder platzen, wenn sie mit den folgenden Substanzen in Berührung kommen:
- Lösungsmittel
- Starke Laugen
- Kompressoröle mit Zusatzstoffen auf Esterbasis
- Synthetische Öle
- Dämpfe der vorher genannten Substanzen
- Alle anderen polycarbonatunverträglichen Substanzen

Behälter dürfen nur mit warmen Wasser gereinigt werden. Metallbehälter einsetzen, falls Kunststoffbehälter für den gegebenen Anwendungsfall nicht geeignet sind.
Falls der maximal einstellbare Sekundärdruck bei nachgeschalteten Geräten zu Fehlfunktionen oder Beschädigungen führen kann, müssen diese durch Druckbegrenzungsventile geschützt werden. Die Druckbegrenzungsventile müssen den Systemanforderungen hinsichtlich Druck und Durchfluß genügen.
Anwendungen mit anderen Fluiden als Druckluft oder in medizinischen Geräten sind nur in Absprache mit Norgren erlaubt.
Wasserdampf durchströmt die Geräte. Bei sekundärseitigem Temperaturabfall kann es zum Wasserausfall kommen. Falls ein Wasserausfall sich negativ auf die Anwendung auswirken könnte, muß ein Lufttrockner eingesetzt werden.

FILTER-REDUCEERVENTIELEN (DUTCH)
Neem contact op met uw Norgren leverancier voor volledige instructies.
Installatie: Schakel de perslucht-toevoer uit en monteer in-l uchtleiding;
- verticaal met het reservoir naar beneden,
- met luchtstroom in de richting van pijl op het huis,
- bovenstrooms van smeertoestellen en schakelende ventielen,
- zo dicht mogelijk bij de bediende apparatuur,
- alvorens onder druk te zetten, verzeker u ervan dat het reservoir en de eventuele beschermkap volledig vastgedraaid zijn met de wijzers met de klok mee.

Onderhoud:
1. Zorg dat het vloeistofniveau in het reservoir beneden de aangegeven grens blijft of bij de B39 beneden de onderkant van het filter-element blijft.
2. Vervang het filter bij vervuiling.

Afstelling: Draai de afstelknop met de wijzers van de klok mee voor een verhoging en tegen de wijzers van de klok in voor een verlaging van de ingestelde druk. Bij een verlaging van de ingestelde druk dient eerst naar een lagere waarde dan naar de gewenste gegaan te worden.
Veiligheid
Deze producten zijn bestemd voor toepassing in industriële persluchtsystemen. Gebruik deze producten niet in situaties waarin druk en/of temperatuur hoger zijn dan aangegeven op het typeplaatje.
Reservoirs van polycarbonaat kunnen aangetast worden door bepaalde oplosmiddelen, sterke alkaloïden, compressor-olie met ester-additieven of synthetische olie, ook in de dampvorm aan de binnen- of de buitenkant van het reservoir. Schoonmaken uitsluitend met warm water.
Pas metalen reservoirs toe waar de kans bestaat dat polycarbonaat-aantastende stoffen voorkomen.
Indien een hogere dan de ingestelde druk aan secundaire zijde schade of weigering van functioneren kan veroorzaken dient benedenstrooms van het filterreduceerventiel een ontlastventiel geplaatst te worden. De afblaascapaciteit van het geselecteerde ontlastventiel dient groter te zijn dan de maximaal mogelijke afblaasstroom bij de ingaande poort.
Wij verzoeken u contact met ons op te nemen indien u dit filter-reduceerventiel wilt gaan gebruiken met andere media dan persluchl, in niet-industriële toepassingen of in ademluchtsystemen.
Waterdamp kan door het filter-reduceerventiel komen en bij daling van de temperatuur benedenstrooms condenseren. Installeer een luchtdroger indien dit het functioneren van de apparatuur aldaar kan beïnvloeden.

FILTRE-REGULATEURS (FRENCH)
Contacter votre agent Norgren le plus proche pour de plus amples renseignements.
Installation : Couper la pression d'air et installer le filtre-régulateur.
- Verticalement (cuve en bas).
- Dans le sens du débit d'air marqué sur le corps.
- En amont du lubrificateur et des distributeurs.
- Au plus près des éléments à alimenter.
- S'assurer que la cuve et sa protection éventuelle soient bien verrouillées avant la mise sous pression.

Entretien:
1. Périodiquement, vérifier le niveau des condensats et purger si nécessaire.
2. Remplacer l'élément filtrant lorsque celui-ci est colmaté.

Réglage: Tourner le bouton de réglage dans le sens horaire pour augmenter la pression et dans le sens contraire pour la diminuer. Pour réduire la pression, diminuer celle-ci au-dessous de la valeur de consigne et augmenter jusqu'à la pression désirée.
Attention : Ce produit a été conçu pour une utilisation avec de l'air comprimé industriel. Ne pas utiliser ce produit à une pression ou température supérieure à celle indiquée sur l'étiquette, ceci pouvant causer des ruptures ou un mauvais fonctionnement. La pression et le débit doivent satisfaire aux besoins de l'installation.
Les cuves transparentes en polycarbonate peuvent être endommagées et éventellement exploser si elles sont exposées à des agents tels que solvants alcalins forts ou des huiles de compresseur contenant soit des additifs à base d'éther soit des huiles synthétiques.
Utiliser des cuves métalliques pour une application dans des ambiances incompatibles avec le polycarbonate.
De la vapeur d'eau peut passer à travers le filtre et se condenser dans le circuit aval avec la chute de température. L'installation d'un assècheur d'air est nécessaire si cette condensation est trop importante.
Si un excès de pression en provenance du régulateur peut endommager ou gêner le fonctionnement des appareils situés en aval de celui-ci, installer une soupape de décharge entre le régulateur et ces appareils. Le seuil de déclenchement ainsi que les caractéristiques de débit de la soupape doivent être choisis pour satisfaire aux exigences des appareils à protéger.

FILTERREGULATORER TIL GENERELLE FORMÅL OG OLJEAVSKILLING (NORWEGIAN)
Kontakt din Norgren leverandør for fullstendig informasjon.
Installasjon - Steng av trykkluften, installer etter følgende anvisning:
- vertikalt med beholder ned.
- med strømningsretningen i enhetens pilretning
- før smørere og ventiler
- så nært forbrukstedet som mulig.
- kontroller at beholder er skrudd helt fast før trykk settes på.

Service.
1. Påse at kondensatnivå ikke stiger over skilleplaten i generelle filter, eller når opp til filterelement på oljeavskillende filter.
2. Erstatt forurenset filterelement.

Justering.
Vri justeringsrattet medurs for å øke trykket og moturs for å redusere trykket. For å redusere trykket, juster først til lavere verdi enn ønsket, deretter opp til ønsket trykk.
ADVARSEL.
Disse produkter er kun beregnet til bruk i industrielle trykkluftsystemer. Produktene må ikke benyttes i tilfeller hvor trykk og temperatur kan overstige de verdier som er angitt i produktbeskrivelsen.
Beholdere i polykarbonat kan bli ødelagt og muligens sprekke dersom de utsettes for løsningsmidler, sterke alkalier, kompressoroljer som inneholder esterbaserte tilsetningsstoffer eller syntetiske oljer.
Selv gasser fra disse stoffene, utvendig eller innvendig, kan resultere i skader. Beholderne må kun rengjøres med varmt vann. Benytt metallbeholder i applikasjoner hvor plastbeholder kan bli utsatt for stoff som er uforenelig med polykarbonat. Dersom systemet er følsomt for trykk over den innstilte verdi bør en avluftningsventil /sikkerhetsventil monteres på regulatorens sekundærside.
Ved benyttelse av andre medier enn trykkluft, for ikke industrielle applikasjoner eller i medisinsk sammenheng, ta kontakt med din Norgren leverandør.
Vanndamp passerer gjennom filteret og vil kondenseres hvis temperaturen faller. Installer en trykklufttørke dersom kondensat vil få en ugunstig virkning på utstyret.

FILTER-REGULATORER FÖR GENERELL ANVÄNDNING OCH OLJEAVSKILJNING (SWEDISH)
Kontakta Er Norgren-leverantör för kompletta instruktioner och servicesatser.
Installation - Stäng av tryckluften och installera enligt följande:
- vertikalt med behållaren nedåt
- med luftflöde i pilens riktning
- innan smörjapparater och riktningsventiler
- så nära förbrukningsstället som möjligt
- kontrollera att behållaren är rätt monterad innan tryckluft släpps på

Service
1. Se till att kondensatnivån inte överstiger skiljeplåten på generella filter, eller når upp till filterelementet på oljeavskiljningsfilter.
2. Ersätt nersmutsade filterelement.

Justering - Vrid ratten/T-vredet medurs för att öka tryckinställningen eller moturs för att minska tryckinställningen. Vid sänkning av tryck, justera till ett tryck lägre än erforderligt, höj sedan till rätt värde.
Varning
Dessa produkter är avsedda enbart för industriella tryckluftsystem. Använd inte enheterna där tryck och temperatur kan överskrida angivna värden.
Behållare i polykarbonat kan skadas och ibland sprängas om de utsätts för substanser som lösningsmedel, starka alkalier, kompressoroljor med esterbaserade additiver eller syntetiska oljor. Även utdunstningar från dessa substanser, internt eller externt, kan förorsaka skada. Behållarna får endast rengöras i varmt vatten.
Använd metallbehållare i miljöer där en plastbehållare kan exponeras av substanser som inte är kompatibla med polykarbonat. Om inställt tryck kan stiga över inställt värde i system med känslig utrustning bör en avluftningsventil installeras efter filter-regulatorn. Avluftningsventilens tryckområde och kapacitet måste överensstämma med systemkraven.
Innan användning till andra media än industriell tryckluft, icke industrielle applikationer eller livsuppehållande system, kontakta Er Norgren-leverantör.
Vatten i ångform passerar igenom dessa filter-regulatorer och kondenserar till vätska om lufttemperaturen sänks i systemet efter filter-regulatorn. Installera lämplig torkutrustning om kondensat kan ha skadlig inverkan på applikationen.

FILTERREGULATOR (DANISH)
Kontakt deres Norgren leverandør for yderligere teknisk information og reservedele.
Montering - Luften afspærres og filterregulatoren monteres på følgende måde:
- Vertikalt (beholder nedad).
- Med luftgennemstrømning i samme retning som pilen på huset
- Før smøreapparat og andre pneumatik komponenter.
- Så tæt som muligt på den enhed der skal betjenes
- Kontroller om beholder og beholderkappe (hvis en sådan er monteret) er skruet helt i bund (mod uret når beholder er nedad og filterregulatoren ses ovenfra) før filterregulatoren sættes under tryk.

Vedligehold
1. Kontroller jævnligt beholder og fjern kondensat hvis det forefindes.
2. Udskift filterelement når det er tilsmudset eller når service indikator (hvis en sådan er monteret) viser halvt rød/grønt.

Justering
Drej justeringsgreb med uret for at øge og mod uret for at mindske sekundærtrykket. Ved justering til lavere sekundærtryk, justér da ned til et lavere tryk end ønsket og derefter op til det ønskede.
Advarsel
Disse enheder er kun til brug i industrielle trykluftsystemer. Anvend ikke enhederne hvor tryk og temperatur overstiger de angivne værdier.
Beholdere af polykarbonat skades eller eventuelt sprænges hvis de udsættes for opløsningsmidler, stærke alkaliske væsker, kompressor olie med hydrogen baserede additiver eller syntetiske olier. Dampene fra disse væsker kan ligeledes ødelægge beholderen. Brug kun varmt vand til rensning.
Anvend metalbeholder i miljøer hvor transparent beholder kan udsættes for substanser, der er aggressive overfor polykarbonat.
Hvis sekundærtrykket kan overstige regulatorens fastsatte indstilling og dermed give funktionsfejl eller ødelægge udstyr, skal én overtryksventil monteres efter regulatoren. Gennemstrømnings- og trykkapacitet for overtryksventil skal svare til systemkravene.
Kontakt venligst Norgren før anvendelse af filterregulator til andre gasser end luft, i ikke industrielle sammenhænge eller til friskluft systemer.
Der kan passere vanddamp gennem enhederne som vil kondensere hvis lufttemperaturen falder på primærsiden. Installer en lufttørrer hvis kondensation kan have en skadelig effekt i systemet.

Quickstart
Installation and Operation • Installation und Bedienung

MassFlowController (MFC)
Type / Typ 8712
MassFlowMeter (MFM)
Type / Typ 8702

GB D

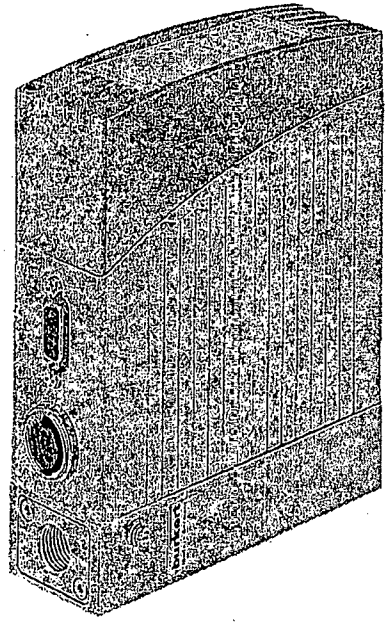

bürkert
Fluid Control Systems

ALLGEMEINE HINWEISE

Bitte beachten Sie diese Hinweise sowie die Einsatzbedingungen und zulässigen Daten gemäß Datenblatt , damit die Geräte einwandfrei funktionieren und lange einsatzfähig bleiben. Bei Nichtbeachtung dieser Hinweise sowie bei unzulässigen Eingriffen in die Geräte entfällt jegliche Haftung unsererseits, ebenso erlischt die Garantie auf Geräte und Zubehörteile! Der MFC Typ 8712 dient ausschließlich zur Regelung des Massendurchflusses von Gasen; der MFM Typ 8702 dient ausschließlich zum Messen von Massendurchflüssen von Gasen. Eine andere oder darüber hinausgehende Benutzung gilt als ***nicht bestimmungsgemäß***. Für hieraus resultierende Schäden haftet Bürkert nicht. Das Risiko trägt allein der Anwender.

Das Quickstart-Faltblatt ist eine Ergänzung zur Bedienungsanleitung. Weiterführende Informationen finden Sie in der Bedienungsanleitung auf der beiliegenden CD.

Sicherheitshinweise

- Halten Sie sich bei der Einsatzplanung und dem Betrieb der Geräte an die allgemeinen Regeln der Technik!
- Installation und Wartungsarbeiten dürfen nur durch Fachpersonal und mit geeignetem Werkzeug erfolgen!
- Beachten Sie die geltenden Unfallverhütungs- und Sicherheitsbestimmungen für elektrische Geräte während des Betriebes und der Wartung des Gerätes!
- Schalten Sie vor Eingriffen in das System in jedem Fall die Spannung ab!
- Treffen Sie geeignete Maßnahmen, um unbeabsichtigtes Betätigen oder unzulässige Beeinträchtigung auszuschließen!
- Bei Nichtbeachtung dieser Hinweise und unzulässigen Eingriffen in die Geräte entfällt jegliche Haftung unsererseits, ebenso erlischt die Garantie auf Geräte und Zubehörteile!

ALLGEMEINE HINWEISE

Sicherheitshinweise

ACHTUNG VORSICHT BEI HANDHABUNG ! ELEKTROSTATISCH GEFÄHRDETE BAUELEMENTE / BAUGRUPPEN

Das Gerät enthält elektronische Bauelemente, die gegen elektrostatische Entladung (ESD) empfindlich reagieren. Berührung mit elektrostatisch aufgeladenen Personen oder Gegenständen gefährdet diese Bauelemente. Im schlimmsten Fall werden sie sofort zerstört oder fallen nach der Inbetriebnahme aus.

Beachten Sie die Anforderungen nach EN 100 015 - 1, um die Möglichkeit eines Schadens durch schlagartige elektrostatische Entladung zu minimieren bzw. zu vermeiden. Achten Sie ebenso darauf, dass Sie elektronische Bauelemente nicht bei anliegender Versorgungsspannung berühren.

Bestimmungsgemäße Verwendung

Zur bestimmungsgemäßen Verwendung gehört insbesondere eine adäquate Mediumsqualität. Stark verschmutzte oder partikelhaltige Medien beeinträchtigen die Genauigkeit. Gelangen flüssige Phasen in den Sensorraum, kann das die Funktion des Sensors und des MFC/MFM beeinflussen. In diesen Fällen müssen dem MFC/MFM geeignete Wartungseinheiten (Filter, Flüssigkeitsabscheider) vorgeschaltet werden.

Technische und Elektrische Daten

Betriebsbedingungen	Typen 8712 und 8702
Umgebungstemperatur	- 10 bis + 50 °C
Mediumstemperatur	- 10 bis + 70 °C
Schutzart	IP 65*
Einbaulage	sh. Kalibrierprotokoll
* bei Verwendung der vorgeschriebenen Stecker	

Elektrische Daten	Typen 8712 und 8702
Betriebsspannung	24 V DC ± 10 % Restwelligkeit < 5 %
Relaisausgänge	2 potentialfreie Wechsler 60 V, 1 A, 60 VA
Messgenauigkeit* (nach 1 min. Aufwärmzeit)	± 0,8 % v.M. ± 0,3 % v.E.

* Die festgelegte Genauigkeit wird erst dann erreicht, wenn nach dem Einschalten die thermischen Ausgleichsvorgänge abgelaufen sind und das Gerät seine Betriebstemperatur erreicht hat.

Allgemeine Hinweise zu Installation und Betrieb

Beachten Sie vor der Installation:

- Schalten Sie geeignete Filter vor, um die Sauberkeit des Betriebsmediums zu gewährleisten.
- Beachten Sie die Einbaulage (siehe Kalibrierdaten).
- Sehen Sie ein Netzteil mit ausreichender Leistung vor.
- Beachten Sie die max. Restwelligkeit der Betriebsspannung.
- Entfernen Sie vor dem Einbau des MFC Verschmutzungen aus den Rohren.

Gehen Sie bei der Inbetriebnahme eines MFC / MFM in der beschriebenen Reihenfolge vor:

1. Mechanische und fluidische Installation
2. Elektrische Installation
3. Beaufschlagen mit Betriebsmedium
4. Regulärer Arbeitsantrieb

Fluidische Installation

Wählen Sie die verfügbaren fluidischen Anschlüsse passend zum maximalen Durchfluss. Einlaufstrecken sind nicht erforderlich. Falls notwendig, liefern wir auch Sondergrößen, wobei die Auslegung der fluidischen Anlage hinsichtlich Strömung und Druckabfall berücksichtigt werden muss.

Verschraubungen

Die Geräte können auf Wunsch auch mit montierten Einschraubverschraubungen geliefert werden. Bitte wählen Sie die entsprechende Verschraubung aus der Tabelle im Anhang der Bedienungsanleitung aus.

Elektrische Anschlüsse

Verbinden Sie zur Gewährleistung der elektromagnetischen Verträglichkeit (EMV) das Gehäuse über ein möglichst kurzes Kabel (Querschnitt so groß wie möglich) mit der Funktionserde (FE).

Die GND- oder Masse Leitungen aller Signale des MFC / MFM müssen in jedem Fall einzeln an den MFC herangeführt werden. Werden alle GND-Signale direkt am MFC gebrückt und nur eine gemeinsame Leitung zum Schaltschrank geführt, kann es zu Signalverschiebungen sowie Störungen (Impulse, Schwingungen usw.) der analogen Signale kommen.

Die MFC / MFM werden mit einer 24-V-Gleichspannungsversorgung betrieben. Wählen Sie den Anschlussquerschnitt abhängig vom verwendeten Ventil und möglichst groß (siehe *Technische Daten*). Geeignete Anschlusskabel finden Sie im Anhang der Bedienungsanleitung.

→ Schließen Sie die Funktionserde (FE) an der gekennzeichneten Schraube an, z.B. mit Hilfe einer Ringzunge.

INSTALLATION UND BETRIEB

Anschlussbelegung Typen 8712 und 8702

8pol. Buchse rund		
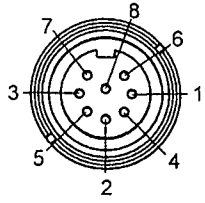	1	24-V-Versorgung +
	2	Relais 1 Mittelkontakt
	3	Relais 2 Mittelkontakt
	4	Relais 1 - Öffner
	5	Relais 1 - Schliesser
	6	24-V-Versorgung GND
	7	Relais 2 - Schliesser
	8	Relais 2 - Öffner

9pol. Sub-D-Buchse (nur bei Busausführung)			
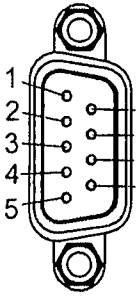		**PROFIBUS DP**	**DeviceNet**
	1	Schirm (FE) Funktionserde	
	2	n.c. (not connected)	CAN_L Datenleitung
	3	RxD/TxD-P B-Leitung	GND
	4	RTS Steuersignal für Repeater	n.c.
	5	GND Datenüber-tragungspotential	n.c.
	6	VDD Versorgungs-spannung + (P5V)	n.c.
	7	n.c.	CAN_H Datenleitung
	8	RxD/TxD-N A-Leitung	n.c.
	9	n.c.	n.c.

ANSCHLUSSBELEGUNG

Anschlussbelegung Typen 8712 und 8702

15pol. Sub-HD-Buchse			
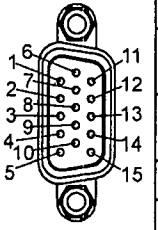		**analoge Ansteuerung**	**Busausführung**
	1	Sollwerteingang +	n.c.
	2	Sollwerteingang GND	n.c.
	3	Istwertausgang +	n.c.
	4	Binäreingang 2	
	5	12-V-Ausgang (nur werksinterne Verwendung)	
	6	RS232 TxD (direkter Anschluss an PC)	
	7	Binäreingang 1	
	8	DGND (für Binäreingänge)	
	9	nur werksinterne Verwendung (nicht belegen!)	
	10	12-V-Ausgang (nur werksinterne Verwendung)	
	11	12-V-Ausgang (nur werksinterne Verwendung)	
	12	Binäreingang 3	
	13	Istwertausgang GND	n.c.
	14	RS232 RxD (direkter Anschluss an PC)	
	15	DGND (für RS232-Schnittstelle)	

ANSCHLUSSBELEGUNG

LEDs zur Anzeige des Betriebszustandes

Default-Belegung

POWER LED (grün)	*leuchtet*	Das Gerät ist mit Betriebsspannung versorgt
	blinkt	Autotune Funktion aktiv
COMMUNICATION LED (gelb)	*leuchtet*	Das Gerät kommuniziert über Bus oder RS232.
LIMIT (y) LED	*leuchtet*	<u>Bei MFC:</u> zeigt an, dass die Stellgröße des Ventils nahezu 100 % erreicht hat. In der Praxis bedeutet dies meist, dass der Druck am Regler nicht ausreicht, um den gewünschten Durchfluss zu realisieren. <u>Bei MFM:</u> zeigt an, dass der Istwert nahezu den Nenndurchfluss erreicht hat.
(blau)	*blinkt*	Das Gerät befindet sich in einem anderen Betriebszustand als Regelbetrieb oder Autotune.
ERROR LED	*leuchtet*	Nicht schwerwiegender Fehler, z.B. nicht erfolgreich abgeschlossene Autotune oder defekte LED
(rot)	*blinkt*	Schwerwiegender Fehler, z.B. Sensorbruch oder fehlerhafte interne Spannungsversorgung

Chr.-Bürkert-Straße 13-17
74653 Ingelfingen
Ph: (0 79 40) 10-111
Fax (0 79 40) 10-448
www.buerkert.com
info@de.buerkert.com

Berlin	Ph: (0 30) 67 97 17 - 0
Dortmund	Ph: (0 23 73) 96 81 - 0
Frankfurt	Ph: (0 61 03) 94 14 - 0
Hannover	Ph: (05 11) 9 02 76 - 0
München	Ph: (0 89) 82 92 28 - 0
Stuttgart	Ph: (07 11) 4 51 10 - 0

BÜRKERT INTERNATIONAL

A	Ph.	(01) 894 13 33	Fax	(01) 894 13 00
AUS	Ph.	(02) 1300 888 868	Fax	(02) 1300 888 076
B	Ph.	(03) 325 89 00	Fax	(03) 325 61 61
BRA	Ph.	(011) 51 82 00 11	Fax	(011) 51 82 88 99
CDN	Ph.	(905) 847 55 66	Fax	(905) 847 90 06
CH	Ph.	(041) 785 66 66	Fax	(041) 785 66 33
CN	Ph.	(21) 58 68 21 19	Fax	(21) 58 67 21 20
CZ	Ph.	(543) 25 25 05	Fax	(543) 25 25 06
DK	Ph.	(44) 50 75 00	Fax	(44) 50 75 75
E	Ph.	(93) 477 79 80	Fax	(93) 477 79 81
EST	Ph.	(372)644 06 98	Fax	(372)631 37 59
F	Ph.	(0388) 58 91 11	Fax	(0388) 57 20 08
GB	Ph.	(01453) 73 13 53	Fax	(01453) 73 13 43
HKG	Ph.	24 80 12 02	Fax	24 18 19 45
I	Ph.	(02) 95 90 71	Fax	(02) 95 90 72 51
J	Ph.	(03) 53 05 36 10	Fax	(03) 53 05 36 11
KOR	Ph.	(02) 34 62 55 92	Fax	(02) 34 62 55 94
N	Ph.	(63) 84 44 10	Fax	(63) 84 44 55
NL	Ph.	(0346) 58 10 10	Fax	(0346) 56 37 17
NZ	Ph.	(09) 622 28 40	Fax	(09) 622 28 47
P	Ph.	(21)212 84 90	Fax	(21)212 84 91
PL	Ph.	(022) 840 60 10	Fax	(022) 840 60 11
RC	Ph.	(02) 26 53 78 68	Fax	(02) 26 53 79 68
RP	Ph.	(02) 776 43 8 4	Fax	(02)776 43 82
S	Ph.	(040) 664 51 00	Fax	(040) 664 51 01
SA	Ph.	(011)574 60 00	Fax	(011) 574 62 26
SF	Ph.	(09) 54 97 06 00	Fax	(09) 503 12 75
SIN	Ph.	68 44 22 33	Fax	68 44 35 32
TR	Ph.	(0232) 459 53 95	Fax	(0232) 459 76 94
TT	Ph.	(04)643 50 08	Fax	(04)643 70 10
USA	Ph.	(949) 223 31 00	Fax	(949) 223 31 98

Betriebsanleitung-Nr.: 804 682 - indB/nov04

GENERAL NOTES

Please observe the notes in these operating instructions as well as the service conditions and permissible data which are specified in the data sheet, in order that the devices will function flawlessly and remain operable for a long time. On non-observance of these notes and unauthorized interference with the device, we will refuse all liability and the guarantee on device and accessories will become void! The MFC Type 8712 serves exclusively to control the mass flow of gases; the MFM Type 8702 serves exclusively to measure the mass flow of gases. Any other use or use exceeding the specific scope is considered to be ***non-intended use***. Bürkert will not be liable for any damage resulting therefrom. The risk will be borne solely by the user.

The Quickstart leaflet is a supplement to the Operating Instructions. More detailed information is to be found in the Operating Instructions on the enclosed CD.

Safety notes

- Keep to standard engineering rules in planning the use of and operating the device!
- Installation and maintenance is only allowed by specialist personnel using suitable tools!
- Observe the current regulations on accident prevention and safety for electrical devices during operation and maintenance of the device!
- Before interfering with the system always switch off the voltage!
- Take suitable precautions to prevent unintended operation or damage by unauthorized action!
- On non-observance of this note and unauthorized interference with the device, we will refuse all liability and the guarantee on device and accessories will become void!

GENERAL NOTES

Safety notes

ATTENTION EXERCISE CAUTION ON HANDLING ! ELECTROSTATICALLY SENSITIVE COMPOENTS / MODULES

This device contains electronic components that are sensitive to electrostatic discharge (ESD). Contact to electrostatically charged persons or objects will endanger these components. In the worst chase, they will be immediately destroyed or will fail after commissioning.

Observe the requirements of EN 100 015 - 1 in order to minimize the possibility of, or avoid, damage from instantaneous electrostatic discharge. Also take care not to touch components that are under supply voltage.

Intended use

Use as intended includes, in particular, adequate medium quality. Media that are heavily contaminated or contain particulates are detrimental to precision; if liquid phases enter the sensor chamber, the function of the sensor and the MFC / MFM may be impaired. In these cases, a suitable maintenance unit (filter, liquid separator) must be installed upstream of the MFC / MFM.

Technical and electrical data

Operating conditions	types 8712 and 8702
Ambient temperature	- 10 to + 50 °C
Medium temperature	- 10 to + 70 °C
Type of protection	IP 65*
Installation position	see calibration record
* with the specified plug connectors	

Electrical data	types 8712 and 8702
Ambient temperature	24 V DC ± 10 % residual ripple < 5 %
Relay outputs	2 potential-free changeover 60 V, 1 A, 60 VA
Measurement precision* (after 1 min. warm-up)	± 0.8 % v.M. ± 0.3 % v.E.

* The specified precision will be obtained only when, after switching on, the thermal equilibration process have been completed and the device has reached its operating temperature.

General notes on installation and operation

Before installation:

- Install a suitable filter upstream to assure cleanliness of the operating medium.
- Observe the installation position (see calibration data).
- Provide a power supply with adequate power.
- Observe the max. residual ripple on the operating voltage.
- Remove dirt from the piping before installation of the MFC.

Proceeded in the following sequence on commissioning am MFC / MFM:

1. Mechanical and fluidic installation
2. Electrical installation
3. Pressurize with operating medium
4. Regular working operation

Fluidic installation

Select the available fluidic connections to match the maximum flow rate. Intake sections are not required. If necessary, we can also supply special sizes, whereby the dimensioning of the fluidic system with regard to flow and pressure drop must be taken into account.

Screw joints

The device can on request also be supplied with screw-in joints alredy assembled. Please select the corresponding srew joints from the table in the annex to the Operating Instructions.

Electrical connection

To assure electromagnetic compatibility (EMC), connect the housing via as short a cable as possible (with as large a cross-section as possible) to the functional earth (FE).

The GND or mass conductors for all signals of the MFC / MFM must in all cases be led individually to the MFC. If all GND signals are bridged directly at the MFC and only one common conductor is led to the switching cabinet, signal displacements and disturbances (pulses, oscillations, etc.) to the analog signals may result.

The MFCs / MFMs are operated with 24 V power supply. Select the connectors cross-section according to the valve used and as large as possible (see *Technical data*). Suitable connecting cables are to be found in the table in the annex to the Operating Instructions.

→ Connect the functional earth (FE) to the marked screw, e.g. using round pliers.

CONNECTION CONFIGURATION

Connection Configuration Types 8712 and 8702

8-pole socket (circular)

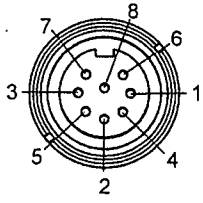

1	24 V supply +
2	Relay 1 centre contact
3	Relay 2 centre contact
4	Relay 1 - breake contact
5	Relay 1 - make contact
6	24 V - supply GND
7	Relay 2 - make contact
8	Relay 2 - break contact

9-pole Sub-D socket (bus version only)

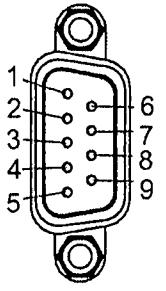

	PROFIBUS DP	DeviceNet
1	Shield (FE) functional earth	
2	n.c. (not connected)	CAN_L data line
3	RxD/TxD-P B-line	GND
4	RTS control signal for repeater	n.c.
5	GND data transmission potential	n.c.
6	VDD supply voltage + (P5V)	n.c.
7	n.c.	CAN_H data line
8	RxD/TxD-N A-line	n.c.
9	n.c.	n.c.

CONNECTION CONFIGURATION

Connection Configuration Types 8712 and 8702

15-pole Sub-HD socket

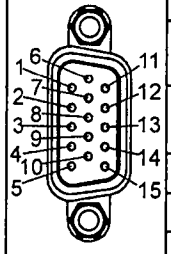

	Analoge drive	Bus version
1	Setpoint input +	n.c.
2	Setpoint input GND	n.c.
3	Process value input +	n.c.
4	Binary input 2	
5	12 V output (For factory use only!)	
6	RS232 TxD (direct connection to PC)	
7	Binary input 1	
8	DGND (for binary inputs)	
9	For factory use only! (Do not connect!)	
10	12 V output (For factory use only!)	
11	12 V output (For factory use only!)	
12	Binary input 3	
13	Process value output GND	n.c.
14	RS232 RxD (direct connection to PC)	
15	DGND (for RS232 interface)	

CONNECTION CONFIGURATION

LEDs to indicate the operating mode

Default configuration

POWER LED (green)	*lights*	The device is supplied with operating voltage.
	flashes	Autotune function activated.
COMMUNICATION LED (yellow)	*lights*	The device communicates via bus or RS232.
LIMIT (y) LED	*lights*	With MFC: indicates that the correcting variable of the valve has almost reached 100%. In practice, this usually means that the pressure at the controller is insufficient to realize the desired flow rate. With MFM: indicates that the process value has almost reached the nominal flow rate.
(blue)	*flashes*	The device is in an operating mode other than control or Autotune.
ERROR LED	*lights*	Not a serious error, e.g. Autotune not completed successfully or faulty LED.
(red)	*flashes*	Serious error, e.g. sensor breakage or faulty internal voltage supply.

Instructions

CPCE + LG

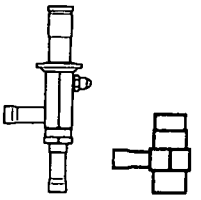

034R9507

CFC, HCFC, HFC

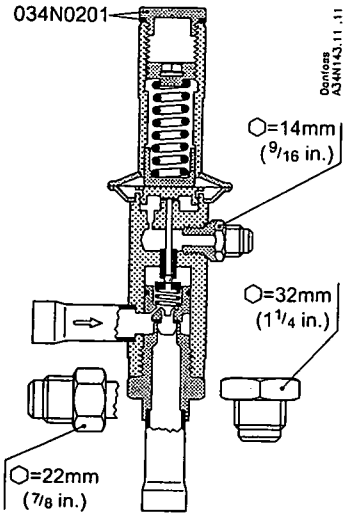

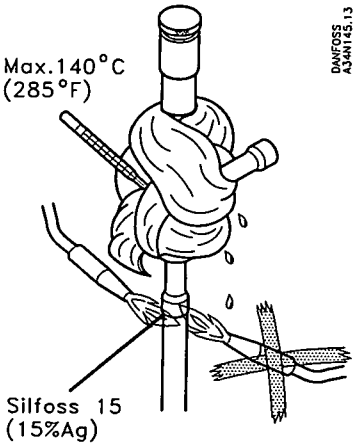

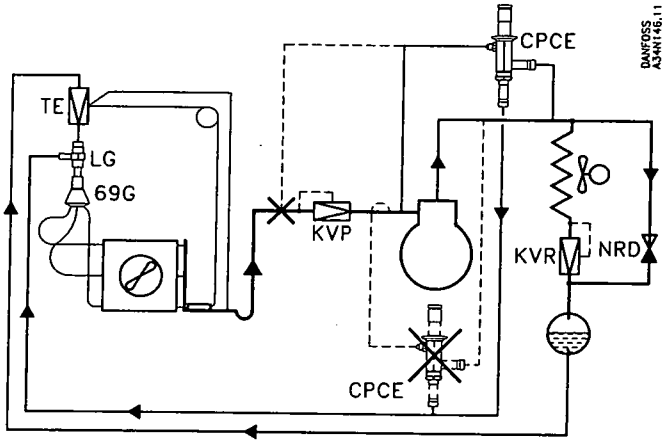

$t_{max.}$ = +140°C (285°F)

$t_{min.}$ = −50°C (−60°F)

PS (MWP) = 28 bar p_e (400 psig)

$p_{test, max.}$ = 31.5 bar p_e (450 psig)

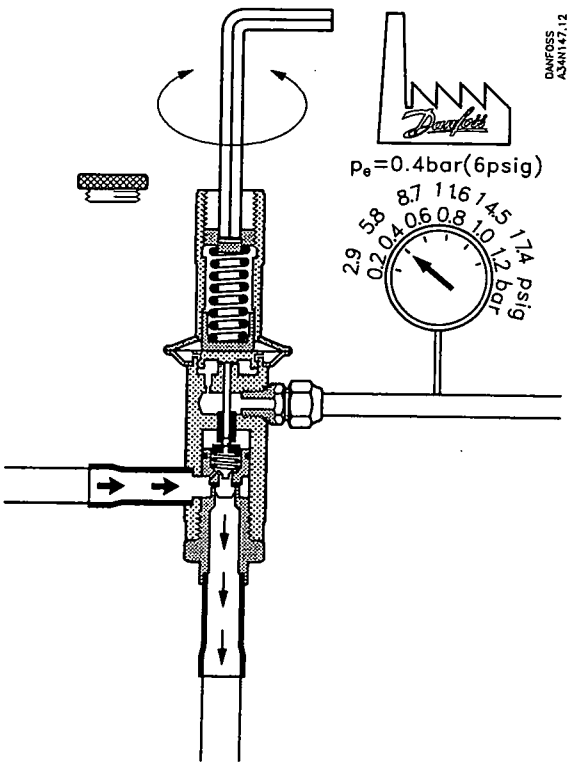

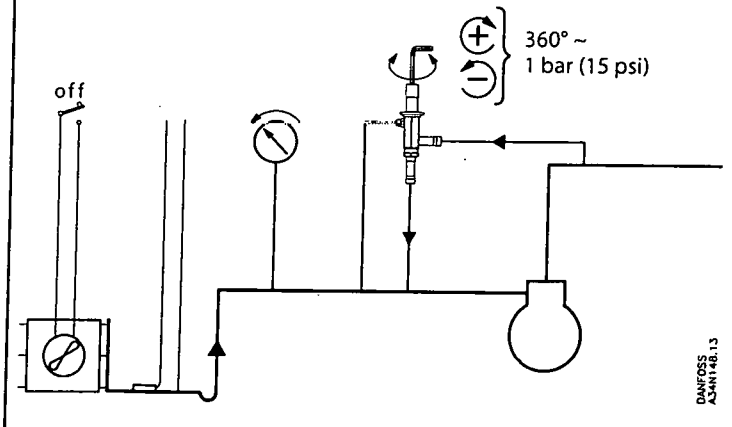

Refrigeration and Air Conditioning Controls

Manual

Interface module
- EKC 366

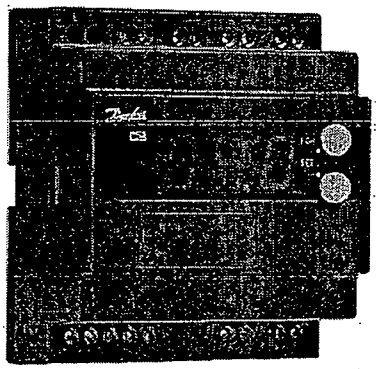

ADAP-KOOL®
Refrigeration control systems

REFRIGERATION AND AIR CONDITIONING

Introduction

Application
The controller is used for regulating a valve in a refrigerating system - for example in connection with:
- Long-term storage of fruits and vegetables
- Refrigerating plant
- Brewery systems
- Processing plant

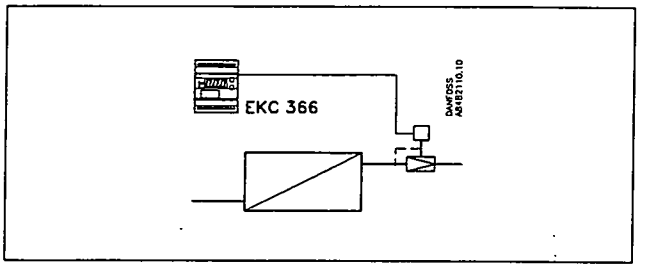

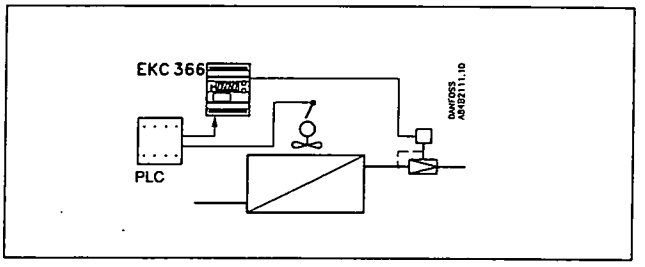

Here the controller has been specially designed for the following functions:
- *Maintenance of a constant evaporating pressure*
  A temperature sensor in the valve's actuator will regulate its temperature. This temperature is an indication of the pressure in the valve, and the interface module will keep this temperature constant.
- *The media temperature is regulated by a PLC or similar device.*
  Here the interface module receives a variable signal from the PLC and will subsequently regulate the valve, so that the refrigeration will be as accurate as possible.

System

The controller must always be used in conjunction with a pilot valve of the types shown here.
The most commonly used one is pilot valve CVQ in conjunction with main valve PM3 (sketched out above).

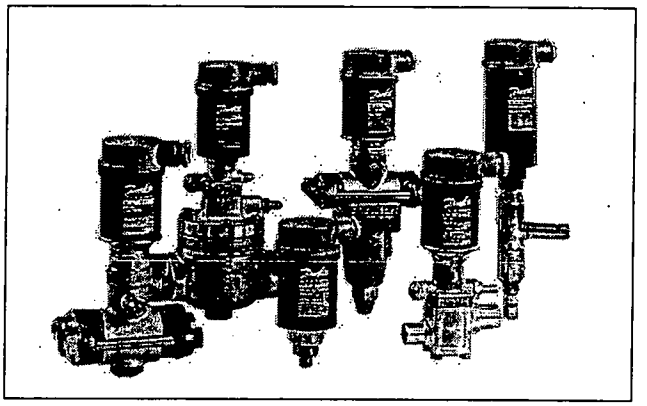

Valve types:
- CVQ + PM
- KVQ
- TQ
- PHTQ
- TEAQ
- CVMQ

Function

The valve constantly receives feedback of the pressure in the evaporator. Whatever the variations in the suction pressure from the compressor, this feedback will produce the result that the evaporating pressure is kept constant.

In conjunction with the controller, an electronic constant-pressure valve is thus obtained.

Inserted between the controller and the actuator is a so-called inner regulating loop. This loop will - via an NTC resistance - constantly control the temperature in the actuator.

In an application where a PLC or similar device is used for regulating a media temperature, the regulating system will in this way be supplied with an outer regulating loop - which will result in great regulating accuracy.

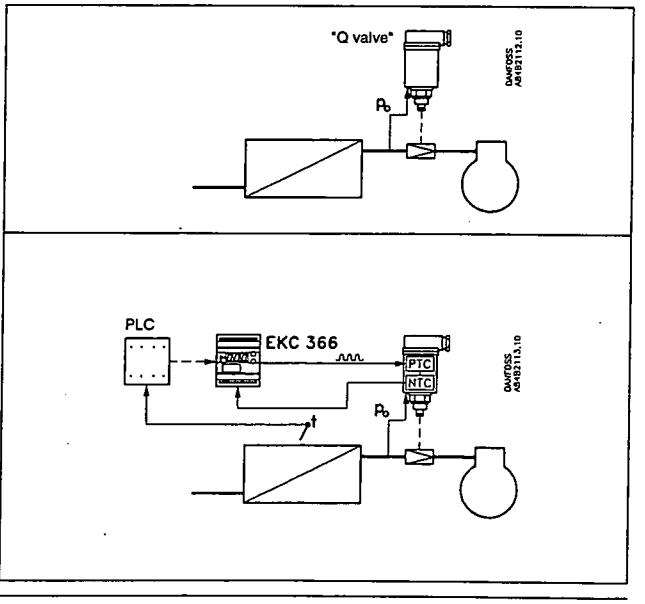

Survey of functions

Function	Parameter	Parameter by operation via data communication
Temperature regulation		**Actuator temperature**
Display of valve temperature The display constantly shows the valve's temperature. The display is filtered over a period of approx. 10 seconds	-	Actuator temp.
Valve's basic temperature reference This temperature setting is the valve's basic setting. At this value no signal must be received from an external regulation. The setting value is taken from one of the curves shown and may be fine-adjusted later when the valve has reached the temperature (read the manometer in the system). (Push both buttons simultaneously to set the menu)	-	SP Temp.
Temperature unit Set here whether the controller is to show the temperature values in °C or in °F. If indication in °F is selected, other temperature settings will also change over to Fahrenheit, either as absolute values or as delta values.	r05	Temp. unit (°C=0, °F=1) (In AKM only °C is displayed, whatever the setting).
Input signal's temperature influence This setting determines how much the input signal has to raise the temperature in the valve. You should aim at selecting the value, so that the valve can close at the highest occurring evaporating pressure when the input signal is maximum (value to be set in Kelvin)	r06	Ext.Ref.offset K
Reference The valve's temperature is regulated on the basis of the basic setting plus the signal from the external regulation. (Reference = SP Temp + percentage of "r06".). The reference can be seen when you push the lower of the two buttons	-	Actuator Ref.
Sundry configurations		**Miscellaneous**
External signal Here you set the signal that is to be connected to the controller. 0: no signal 1: 4-20 mA 2: 0-20 mA 3: 0-10 V 4: 2-10 V	o10	AI Type
Frequency Set network frequency	o12	50 / 60 Hz (50=0, 60=1)
Data communication If the controller is built into a network with data communication, it must have an address, and the master gateway of the data communication must then know this address. These settings can only be madewhen a data communication modulehas been mounted in the controller and the installation of the data communication cable has been completed. This installation is mentioned in a separate document "RC.8A.C".		Following installation of a data communication module, the controller can be operated on a par with the other controllers in ADAP-KOOL® refrigeration controls.
The address is set between 1 and 60	o03	
The address is sent to the gateway when the menu is set in pos. ON	o04	
Language This setting is only required when data communication is connected to the controller. Settings: 0=English, 1=German, 2=French, 3=Danish, 4=Spanish, and 6= Swedish When the controller is operated via data communication, the texts in the right-hand column will be shown in the selected language. When you change the setting to an other language you must activate o04 before "the new language" can be visible from the AKM program.	o11	Language
Service		
The signal will be constantly updated. If you wish to follow the signal beyond the 20 seconds, the time-out period, push one of the two buttons before the time-out period expires		
External current signal Here you can read the value of the current signal received by the controller at its input	u06	AI mA
External voltage signal Here you can read the value of the voltage signal received by the controller at its input	u07	AI Volt

Operation

Display
The values will be shown with three digits, and with a setting you can determine whether they are to be shown in °C or in °F.

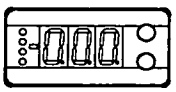

LED's on the front panel
There is one LED on the front panel which will light up when power is sent to the pilot valve.
There are furthermore three LED's which will flash if there is an error in the regulation. In this situation you can show the error code on the display and cut out the alarm by giving the upper button a brief push.

The controller can give the following messages:	
E1	Errors in the controller
E11	Valve's actuator temperature outside its range
E12	Input signal outside its range

The buttons
When you want to change a setting, the two buttons will give you a higher or lower value depending on the button you are pushing. But before you change the value, you must have access to the menu. You obtain this by pushing the upper button for a couple of seconds - you will then enter the column with parameter codes. Find the parameter code you want to change and push the two buttons simultaneously. When you have changed the value, save the new value by once more pushing the two buttons simultaneously.

Gives access to the menu

Gives access to changes

Saves a change

Examples of operations

Set the valve's basic temperature reference
1. Push the two buttons simultaneously
2. Push one of the buttons and select the new value
3. Push both buttons again to conclude the setting

Read the valve's regulating reference
1. Push the lower button
   (After approx. 20 seconds the controller automatically returns to its setting, and it again shows the valve's actual temperature)

Set one of the other menus
1. Push the upper button until a parameter is shown
2. Push one of the buttons and find the parameter you want to change
3. Push both buttons simultaneously until the parameter value is shown
4. Push one of the buttons and select the new value
5. Push both buttons again to conclude the setting

Menu survey

SW =1.2x

Function	Para-meter	Min.	Max.
Read valve's actual temperature (standard display)	-		°C
Set valve's basic temperature reference	-	40.0°C	140°C
Read valve's regulation reference	-		°C
Select temperature unit (°C/°F)	r05	°C	°F
Input signal's temperature influence	r06	-99.9 K	99.9 K
Controller's address	o03*	1	60
ON/OFF switch (service-pin message)	o04*	-	-
Define input signal 0: no signal 1: 4 - 20 mA 2: 0 - 20 mA 3: 0 - 10 V 4: 2 - 10 V	o10	0	4
Language (0=English, 1=German, 2=french, 3=Danish, 4=Spanish, 6=Swedish). When you change this setting you must also activate o04.	011*	0	6
Set supply voltage frequency	o12	50 Hz	60 Hz
Service information			
Read value of external current signal	u06		mA
Read value of external voltage signal	u07		V

*) This setting will only be possible if a data communication module has been installed in the controller.

Factory setting
If you need to return to the factory-set values, it can be done in this way:
- Cut out the supply voltage to the controller
- Keep both buttons depressed at the same time as you reconnect the supply voltage

Valve's working temperature

Without external signal
The working temperature must be set on the basis of one of the following curves. Find the actuator temperature corresponding to the required evaporating temperature (push). Set the value in the controller as mentioned under "Set the valve's basic temperature reference".

With external signal
If the valve is to be operated with an external signal, two settings have to be made. One is as mentioned to the left, and the other determines how much the signal must be able to raise the temperature in the valve. This value is also read on one of the following curves.
Set the value in the r06 menu.
If the set value is too low, the valve will not be able to close/open fully.

CVQ

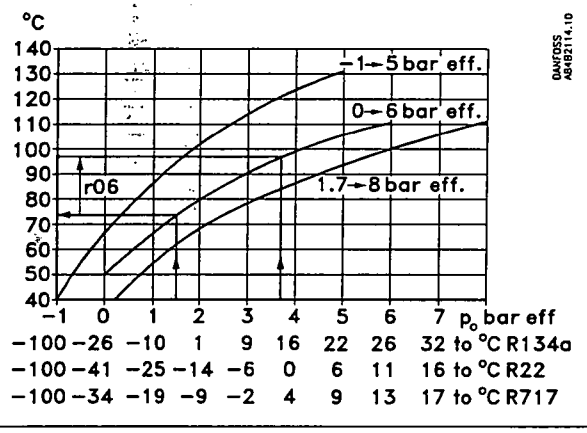

KVQ

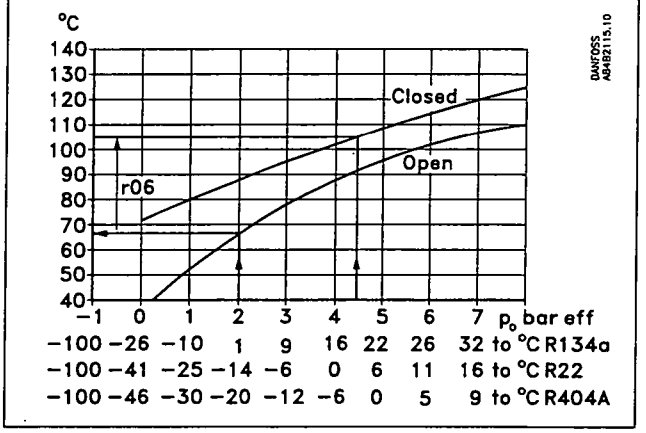

TQ

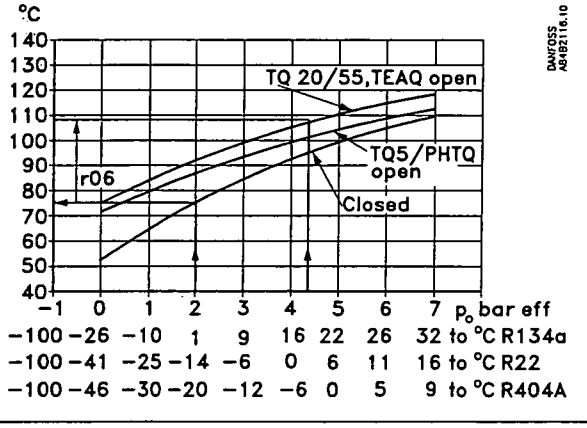

All the curves shown are approximate.

CVMQ

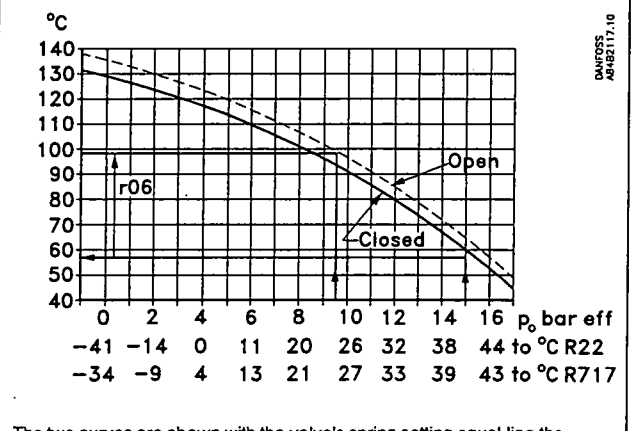

The two curves are shown with the valve's spring setting equal-ling the factory setting. If the spring setting is changed to a higher pressure, the curve will be displaced correspondingly to a higher temperature.

Example
CVQ type = 0-6 bar
Refrigerant = R_{717}
A constant evaporating temperature or input pressure to the valve of -9°C (2 bar) is required.
According to the CVQ curve this will require a temperature in the actuator of 80°C. Set the valve's basic temperature reference at 80°C.

When the valve has reached its working temperature, it may be necessary to fine-adjust the setting from the system's manometer.

Data

Supply voltage	24 V a.c. +/-15% 50/60 Hz, 80 VA (the supply voltage is galvanically separated from the input and output signals)	
Power consumption	Controller Valve	5 VA 75 VA
Input signal	4-20 mA, 0-20 mA, 0-10V d.c. or 2-10 V d.c.	
Actuator	Input	Temperature signal from sensor in actuator
	Output	Pulsating 24 V a.c. to actuator
Data communication	Possible to connect a data communication module	
Ambient temperature	During operation During transport	-10 - 55°C -40 - 70°C
Enclosure	IP 20	
Weight	300 g	
Mounting	DIN rail	
Display	LED, 3 digits	
Terminals	max. 2.5 mm² multicore	
Approvals	EU Low Voltage Directive and EMC demands re CE-marking complied with. LVD-tested acc. to EN 60730-1 and EN 60730-2-9 EMC-tested acc. to EN 50081-1 and EN 50082-2	

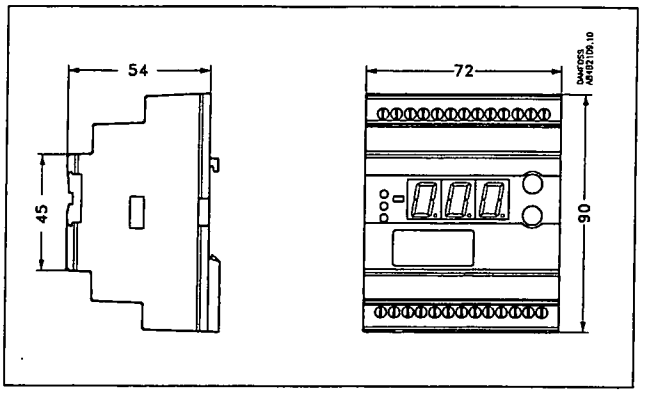

Ordering

Type	Function	Code No.
EKC 366	Interface module	**084B7076**
EKA 173	Data communication module (accessories), (FTT 10 module)	**084B7092**
EKA 174	Data communication module (accessories), (RS 485 module) with galvanic separation	**084B7124**

Valves: Kindly refer to catalogue RK.00.H

Connections

Necessary connections
Terminals:
25-26 Supply voltage 24 V a.c. 80 VA
17-18 Signal from NTC sensor in valve
23-24 Supply to valve's PTC resistance

Control signal, if applicable (see also o10)
Either terminals:
15-16 Voltage signal
or
18-19 Current signal

Data communication, if applicable
Terminals:
3-4 Mount only, if a data communication module has been mounted.
It is <u>important</u> that the installation of the data communication cable be done correctly. Cf. separate literature No. RC.8A.C...

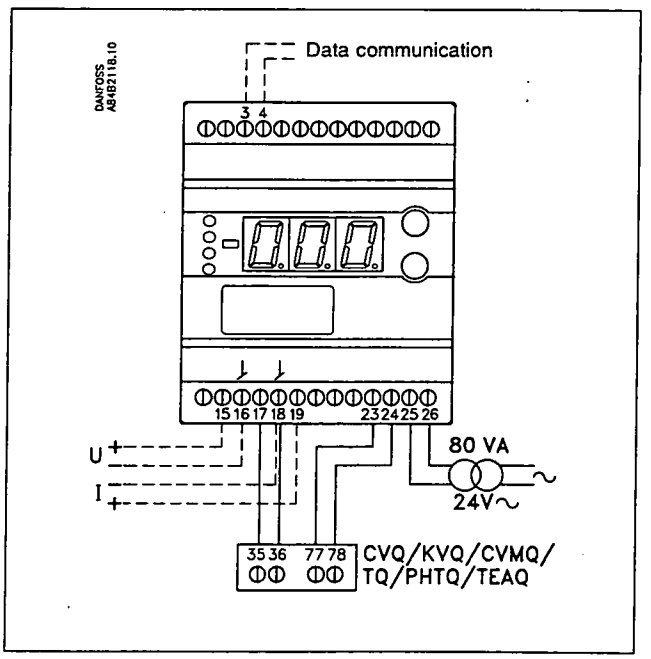

Data communication

This page contains a description of a few of the possibilities you will have when the controller is provided with data communication.

If you want to know more about operation of controllers via PC, you may order additional literature.

Examples

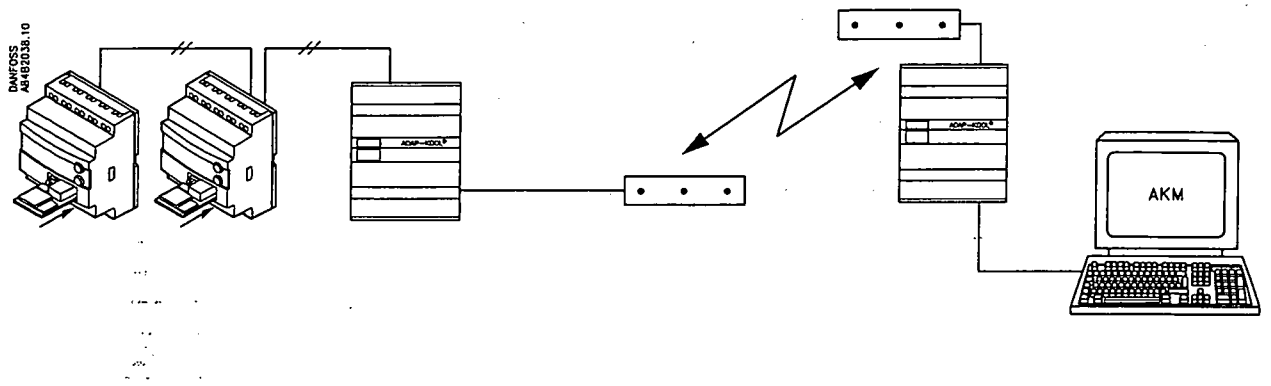

Each controller is provided with a plug-in module.

The controllers are then connected to a two-core cable.

Up to 60 controllers may be connected to one cable.

This cable is also connected to a gateway type AKA 243.

This gateway will now control the communication to and from the controllers.

It will collect temperature values and it will receive alarms. When there is an alarm the alarm relay will be activated for two minutes

The gateway can now be connected to a modem.

When an alarm occurs from one of the controllers, the gateway will - via the modem - make a phone call to the service company.

At the service company a modem, gateway and PC with system software type AKM have been installed.

All the controllers' functions can now be operated from the various menu displays.

The programme will for example upload all the collected temperature values once a day.

Example of menu display

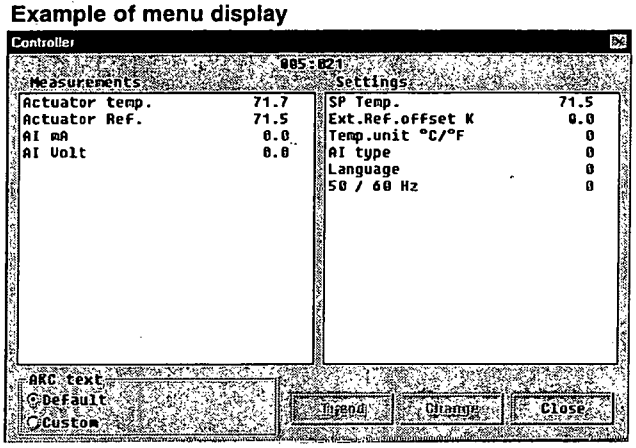

Measurements are shown at one side and settings at the other.

You will also be able to see the parameter names of the functions on page 3.

With a simple change-over the values can also be shown in a trend diagram.

If you prefer to see the earlier temperature measurements, you may upload a log collection.

Alarms

If the controller is extended with data communication, it will be possible to define the importance of the transmitted alarms.

The importance is defined with the setting: 1, 2, 3 or 0.

When the alarm then arises at some time, it will result in one of the following activities:

1 = Alarm
The alarm message is sent off with alarm status 1. This means that the gateway that is the master in the system will have its alarm relay output activated for two minutes. Later, when the alarm ceases, the alarm text will be retransmitted, but now with status value 0.

2 = Message
The alarm text is transmitted with status value 2. Later, when the "message" lapses, the alarm text is retransmitted, but now with status value 0.

3 = Alarm
As "1", but the master gateway's relay output is not activated.

0 = Suppressed information
The alarm text is stopped at the controller. It is transmitted nowhere.

Danfoss can accept no responsibility for possible errors in catalogues, brochures and other printed material. Danfoss reserves the right to alter its products without notice. This also applies to products already on order provided that such alterations can be made without subsequential changes being necessary in specifications already agreed.
All trademarks in this material are property of the respective companies. Danfoss and Danfoss logotype are trademarks of Danfoss A/S. All rights reserved.

RC-ET

Instructions
PM 5-65

Installation / Installazione

027R9524

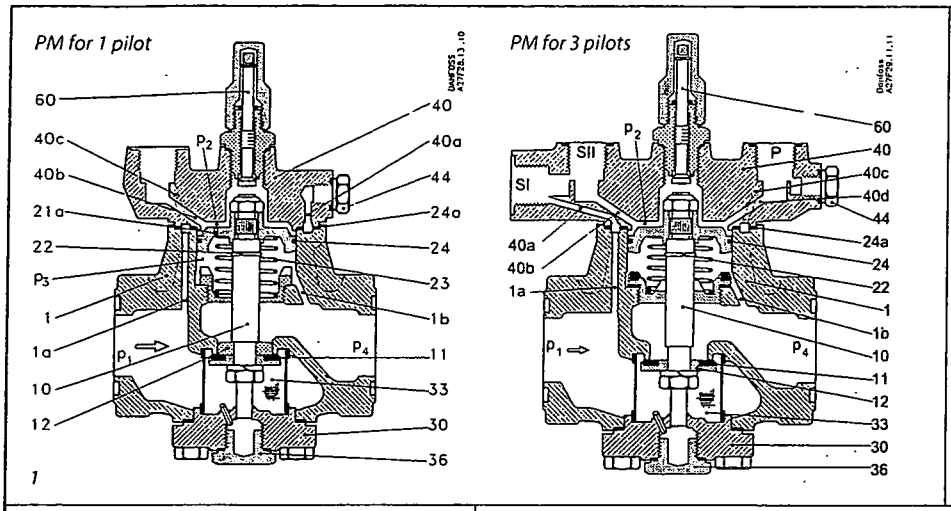

1

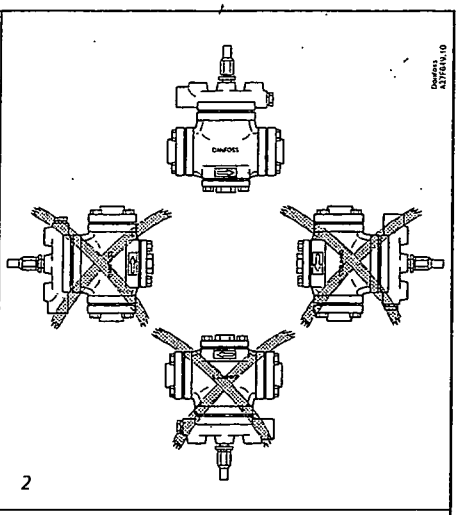

2

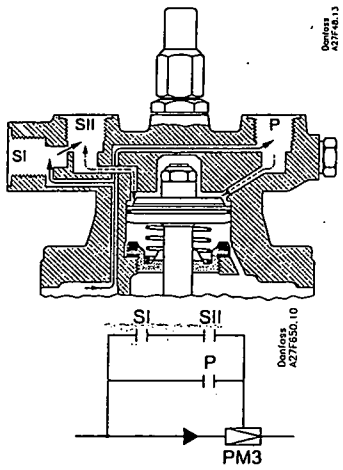

3

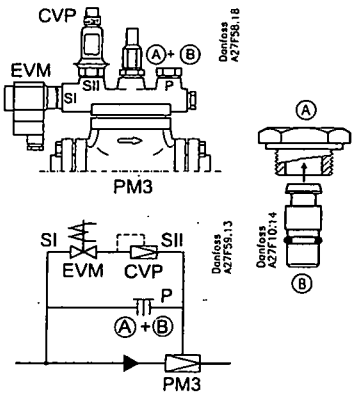

4a

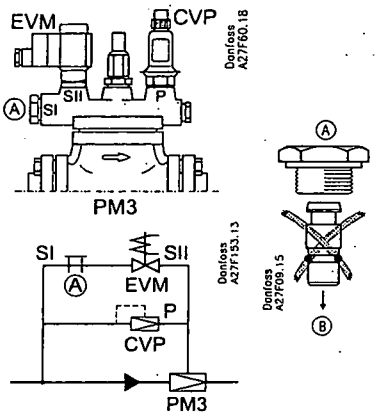

4b

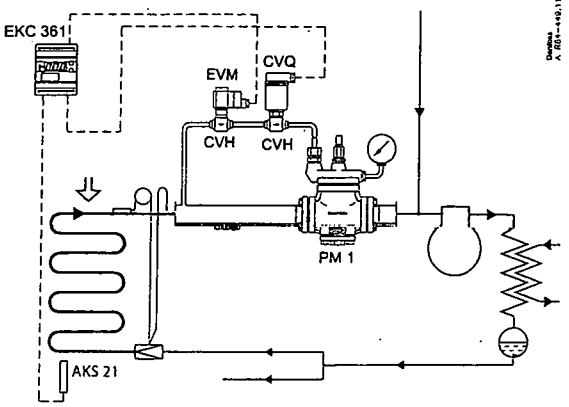

5

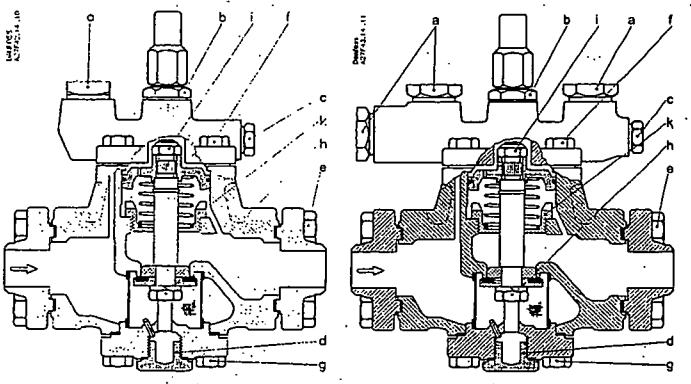

Tabel I - Table I - Tabelle - Tableau I - Tabella 1

Pos.	Tilspændingsmoment i Nm (lb - ft) Tightening Torque in Nm (lb - ft) Anzugsmoment in Nm (lb - ft) Couple de serrage en Nm (lb - ft) Coppia di serraggio in Nm(lb- ft)					
	PM størrelse / size / Grösse / dimension / PM dimensioni					
	5-20	25	32	40	50	65
a	50 (37)					
b	50 (37)					
c	25 (18)					
d	50 (37)					
e	60 (44)				80 (59)	
f	35 (26)			60 (44)		80 (59)
g	35 (26)			60 (44)		80 (59)
h	30 (22)		40 (30)		50 (37)	60 (44)
i	25 (18)					
k	80 (59)			100 (74)		120 (89)

6

© Danfoss A/S (RC-CMS/MWA), 05 - 2005

DANSK

Installation

Konstruktion
Se fig. 1.
1. Ventilhus
1a og 1b. Kanaler i ventilhus (1)
10. Ventilspindel
11. Drøvlekegle
12. Ventilsæde
21a. Udligningshul i servostempel (24)
22. Låsering
24. Servostempel
24a. Tætning
30. Bunddæksel
33. Smudsfilter
36. Bundprop
40. Dæksel
40a, b, c og d. Kanaler i dæksel (40)
44. Manometertilslutning
60. Spindel for manuel åbning
S I, S II og P. Højtrykspilotventil

Kølemidler
Kan anvendes til alle almindelige, ikke-brændbare kølemidler, herunder R717, og ikke-korroderende gasser/væsker under passende hensyntagen til tætningsmaterialer.
Brændbare kulbrinter bør ikke anvendes.
Det anbefales, kun at anvende ventilen i lukkede kredsløb.
Yderligere informationer fås ved at kontakte Danfoss.

Temperaturområde
PM: -60/+120°C (-76/+248°F)

Trykområde
PM: Ventilerne er beregnet til et maks. arbejdstryk på 28 bar g (406 psi g).

Tekniske data
PM 1 kan anvendes i suge-, væske-, varmgas- og væske-/dampledninger.
PM 1 regulerer medieflowet ved hjælp af modulering eller on/off-regulering afhængigt af styreimpulsen fra de påskruede pilotventiler.

PM 3 er udstyret med tre tilslutninger til pilotventiler: to seriebundne tilslutninger, mærket "S I" og "S II", og én tilslutning, mærket "P", der er parallelforbundet med disse to, se fig. 3 og 4.

Hvis der kun skal anvendes to pilotventiler til den ønskede funktion, skal den tredje pilotventil lukkes af med en blændprop (se fig. 4). Der leveres en blændprop sammen med ventilen.

Åbningsdifferenstryk (Δp)
Hovedventilen PM kræver et åbnings-differenstryk på minimum 0,07 bar (1 psi) for at begynde at åbne, og 0,2 bar (2,8 psi) for at åbne helt.
Bemærk: Ventilen åbner, når der opstår et differenstryk mod flowretningen.

Installation
Flangesæt til PM leveres separat. Ventilen monteres, så pilen peger i flowretningen og topdækslet vender opad (fig. 2). Topdækslet kan roteres 4 x 90° i forhold til ventilhuset.

Ventilen er udstyret med en spindel for manuel åbning.
Hvis der anvendes en ekstern pilotventil, skal pilotledningen tilsluttes den øverste side af hovedledningen, så eventuel snavs og olie fra anlægget ikke trænger ind i pilotledningen.
Hvis PM 1 skal anvendes som magnetventil i en væskeledning, anbefales det, ikke at anvende eksternt styretryk, da dette kan forårsage væskeslag.

Ventilen kan modstå et højt indvendigt tryk. Rørsystemet bør imidlertid konstrueres, så væskefælder undgås og risikoen for hydraulisk tryk forårsaget af termisk ekspansion reduceres. Ventilen skal beskyttes mod tryktransienter, såsom væskeslag, i systemet.

Svejsning
Hvis der bruges svejseflanger, må der kun anvendes materialer og svejsemetoder, som er kompatible med flangematerialet. Før ventilen sættes på plads, bør flangerne rengøres indvendigt for at fjerne svejseslagger.

Efter installation skal ventilhuset og flangerne være uden spænding (ekstern belastning).

PM-ventiler må ikke installeres i systemer, hvor ventilens udløbsside er åben til atmosfæren. Ventilens udløbsside skal altid tilsluttes systemet eller blændes korrekt af, for eksempel med en påsvejset endebund.

Farver og identifikation
PM-ventilerne er zinkkromateret fra fabrikken. Hvis yderligere korrosionsbeskyttelse er påkrævet, kan ventilerne males. Ventilen kan identificeres nøjagtigt ved hjælp af typeskiltet på topdækslet. Efter installation og montering skal ventilhusets udvendige overflade beskyttes mod korrosion med et velegnet antikorrosionsmiddel.

Det anbefales at afdække typeskiltet ved ommaling af ventilen.

Vedligeholdelse

Service
PM-ventilerne er lette at demontere og består primært af udskiftelige dele. Når bunddækslet fjernes, kan smudsfiltret afmonteres og rengøres. Undlad at åbne ventilen, mens den stadig er under tryk.

- Kontroller, at O ringen ikke er beskadiget.
- Kontroller, at spindlen er fri for ridser og slagmærker.
- Udskift delene, hvis teflonventilpladen er beskadiget.

Montering
Fjern eventuelt snavs fra huset, før ventilen monteres. Kontroller, at kanalerne i ventilen ikke er tilstoppet med partikler eller lignende.

Tilspænding (fig. 6)
Tilspændingsmomenter
Se tabel I.

Anvend kun originale Danfoss-dele, herunder pakdåser, O-ringe og pakninger, ved udskiftning. De materialer, som er anvendt til nye dele, er certificeret til det pågældende kølemiddel.

Kontakt venligst Danfoss i tilfælde af tvivl.

Tegningerne er kun ment som eksempler og kan ikke anvendes i forbindelse med dimensionerings- og konstruktionsarbejde.

Danfoss påtager sig intet ansvar for fejl og udeladelser. Danfoss Industrial Refrigeration forbeholder sig retten til at foretage ændringer i produkter og specifikationer uden forudgående varsel.

© Danfoss A/S (RC-CMS/MWA), 05 - 2005

Installation

Design
See fig. 1
1. Valve body
1a and 1b. Channels in valve body (1)
10. Valve spindle
11. Throttle cone
12. Valve seat
21a. Equalizing hole in servo piston (24)
22. Locking ring
24. Servo piston
24a. Gasket
30. Bottom cover
33. Strainer
36. Bottom plug
40. Cover
40a, b, c and d. Channels in cover (40)
44. Pressure gauge connection
60. Manual operating spindle
S I, S II and P. Pilot valve connections

Refrigerants
Applicable to all common non-flammable refrigerants, including R717 and non-corrosive gases/liquids dependent on sealing material compatability.
Flammable hydrocarbons are not recommended. The valve is only recommended for use in closed circuits. For further information please contact Danfoss.

Temperature range
PM: –60/+120°C (–76/+248°F)

Pressure range
PM: The valves are designed for a max. working pressure of 28 bar g (406 psi g).

Technical data
The PM 1 can be used in suction, liquid, hot-gas and liquid/vapour lines.
The PM 1 regulates the flow of the medium by modulation or on/off function, depending on the control impulse from the screwed on pilot valves.
The PM 3 has three connections for pilot valves: two in series, marked "S I" and "S II", and one in parallel with these two, marked "P", figs. 3 and 4.

If only two pilot valves are necessary for the function required, the third pilot connection must be sealed with a blanking plug (see fig. 4). A blanking plug is supplied with the valve.

Opening differential pressure (Δp)
The PM main valve requires a minimum opening differential pressure of 0.07 bar (1 psi) to begin to open and 0.2 bar (2.8 psi) to be completely open.
Note: The valve opens when differential pressure against the direction of flow occurs.

Installation
Flange set for the PM is delivered separately.
The valve must be installed with the arrow in the direction of the flow and the top cover upwards (fig. 2). The top cover can be rotated 4 X 90° in relation to the valve body. The valve is fitted with a spindle for manual opening.

If an external pilot valve is used, the pilot line must be connected to the upper side of the main line so that any dirt and oil from the plant will not find its way into the pilot line.
If the PM 1 is to be used as a solenoid valve in a liquid line, external control pressure cannot be recommended because it can cause liquid hammer.

The valve is designed to withstand a high internal pressure. However, the piping system should be designed to avoid liquid traps and reduce the risk of hydraulic pressure caused by thermal expansion. It must be ensured that the valve is protected from pressure transients like "liquid hammer" in the system.

Welding
If using welding flanges, only materials and welding methods, compatible with the flange material must be welded to the flanges. The flanges should be cleaned internally to remove welding debris on completion of welding and before the valve is inserted.

The valve housing and flanges must be free from stresses (external loads) after installation.

PM valves must not be mounted in systems where the outlet side of the valve is open to atmosphere. The outlet side of the valve must always be connected to the system or properly capped off, for example with a welded-on end plate.

Colours and identification
The PM valves are Zinc-Chromated in the factory. If further corrosion protection is required, the valves can be painted.
Precise identification of the valve is made via the ID plate on the top cover. The external surface of the valve housing must be prevented against corrosion with a suitable protective coating after installation and assembly.

Protection of the ID plate when repainting the valve is recommended.

Maintenance

Service
The PM valves are easy to dismantle and most of its parts are replaceable. When the bottom cover is removed, the strainer can be taken out for cleaning.
Do not open the valve while the valve is still under pressure.

- Check that the O-ring has not been damaged.
- Check that the spindle is free of scratches and impact marks.
- If the teflon ring has been damaged, the parts must be replaced.

Assembly
Remove any dirt from the body before the valve is assembled. Check that all channels in the valve are not blocked with articles or similar.

Tightening (fig. 6)
Tightening torques
See table I.

Use only original Danfoss parts, including packing glands, O-rings and gaskets for replacement. Materials of new parts are certified for the relevant refrigerant.

In cases of doubt, please contact Danfoss.

Drawings are only for illustration, not for dimensioning or construction.

Danfoss accepts no responsibility for errors and omissions. Danfoss Industrial Refrigeration reserves the right to make changes to products and specifications without prior notice.

DEUTSCH

Installation

Konstruktion
Siehe Abb. 1
1. Ventilkörper
1a und 1b. Kanäle im Ventilgehäuse (1)
10. Ventilspindel
11. Drosselkegel
12. Ventilsitz
21a. Ausgleichsbohrung im Servokolben (24)
22. Verriegelungsring
24. Servokolben
24a. Dichtung
30. Bodendeckel
33. Sieb
36. Bodenverschraubung
40. Verschluss
40a, b, c und d. Kanäle im Gehäuse (40)
44. Manometeranschluss
60. Manuelle Einstellspindel
S I, S II und P. Pilotventilanschlüsse

Kältemittel
Anwendbar für alle herkömmlichen, nicht entflammbaren Kältemittel, einschließlich R717, und nicht korrodierende Gase/Flüssigkeiten, sofern die Dichtungsmaterialien geeignet sind.
Entflammbare Kohlenwasserstoffe werden nicht empfohlen. Das Ventil wird nur für den Einsatz in geschlossenen Kreisläufen empfohlen.
Für weitere Informationen wenden Sie sich bitte an Danfoss.

Temperaturbereich
PM: –60/+120°C (–76/+248°F)

Druckbereich
PM: Die Ventile sind für einen max. Arbeitsdruck von 28 bar (406 psi) ausgelegt.

Technische Daten
PM 1 kann in Saug-, Flüssigkeits-, Heißgas- und Flüssigkeits-/Dampfleitungen eingesetzt werden. PM 1 regelt den Medienstrom durch Modulation oder Ein-Aus-Funktion, abhängig vom Steuerimpuls der aufgeschraubten Pilotventile.

PM 3 verfügt über drei Anschlüsse für Pilotventile: zwei in Serie, "S I" und "S II" gekennzeichnet, und einen parallel zu diesen beiden, gekennzeichnet mit "P", Abb. 3 und 4.
Werden nur zwei Pilotventile für die erforderliche Funktion benötigt, muss der dritte Pilotanschluss mit einem Blindstopfen dicht verschlossen werden (siehe Abb. 4). Ein Blindstopfen wird mit dem Ventil mitgeliefert.

Öffnungsdruckdifferenz (Δp)
Das PM-Hauptventil erfordert eine minimale Öffnungsdruckdifferenz von 0,07 bar (1 psi) um zu öffnen zu beginnen und 0,2 bar (2,8 psi) um völlig zu öffnen.
Anmerkung: Das Ventil öffnet, wenn ein Differenzdruck gegen die Durchfluss-richtung auftritt.

Installation
Flanschsätze für PM werden separat geliefert. Das Ventil ist mit dem Pfeil in Durchflussrichtung und dem Kopf nach oben zu installieren (Abb. 2). Der Ventilkopf lässt sich gegenüber dem Ventilgehäuse um 4 x 90° drehen.

Das Ventil ist mit einer Spindel zum manuellen Öffnen ausgestattet. Kommt ein externes Pilotventil zum Einsatz, ist die Pilotleitung mit der Oberseite der Hauptleitung zu verbinden, um das Eindringen von in der Anlage befindlichem Schmutz und Öl in die Pilotleitung zu verhindern.
Wird PM 1 als Magnetventil in einer Flüssigkeitsleitung eingesetzt, kann externer Steuerdruck, um Flüssigkeitsschläge zu vermeiden, nicht empfohlen werden.

Das Ventil ist für hohe Innendrücke dimensioniert. Jedoch ist bei der Auslegung des Rohrsystems darauf zu achten, dass Kältemitteleinschlüsse vermieden werden, und dass das Risiko von durch thermische Expansion verursachtem hydraulischem Druck herabgesetzt wird.
Es ist sicherzustellen, dass das Ventil gegen Druckschwingungen in der Anlage, wie Flüssigkeitsschläge, geschützt ist.

Anschweißenden
Werden Anschweißenden benutzt, sind nur mit dem Flanschwerkstoff verträgliche Materialien und Schweißmethoden zu verwenden. Die Flansche sind nach Abschluss der Schweißarbeiten und vor dem Einsetzen des Ventils innen von Schweißabfällen zu reinigen.

Das Ventilgehäuse und die Flansche müssen nach der Installation frei von Belastungen (externen Kräften) sein.

PM-Ventile dürfen nicht in Anlagen eingebaut werden, in denen die Ausgangsseite des Ventils zur Atmosphäre offen ist. Die Ausgangsseite des Ventils muss immer an die Anlage angeschlossen oder korrekt verschlossen sein, beispielsweise mit einem aufgeschweißten Enddeckel.

Farben und Kennzeichnung
Die PM-Ventile werden im Werk zinkchromatiert. Ist zusätzlicher Korrosionsschutz erforderlich, empfiehlt sich ein Anstrich der Ventile. Die genaue Identifikation des Ventils kann dem Typenschild am Ventilkopf entnommen werden. Die Außenoberfläche des Ventilgehäuses ist mit einer passenden Schutzschicht nach Installation und Zusammenbau gegen Korrosion zu schützen.

Beim Anstreichen ist das Typenschild zum Schutz abzudecken.

Instandhaltung

Service
PM-Ventile sind einfach auseinander zu nehmen, und die meisten Teile sind austauschbar. Nach Entfernen des Bodendeckels lässt sich das Sieb zum Reinigen herausnehmen. Das Ventil nicht öffnen, solange es unter Druck steht.
- Kontrollieren, dass der O-Ring nicht beschädigt ist.
- Kontrollieren, dass die Spindel frei von Riefen und Schlagkerben ist.
- Ist der Teflonring beschädigt, ist er auszutauschen.

Zusammenbau
Vor dem Zusammenbau das Gehäuse sorgfältig von Schmutz reinigen.
Kontrollieren, dass keiner der Kanäle durch Gegenstände oder Ähnliches blockiert wird.

Festspannen (Abb. 6)
Anzugsmomente
Siehe Tabelle 1.

Zum Austausch nur Originalteile von Danfoss, einschließlich Stopfbuchsen, O-Ringe und Dichtungen, benutzen. Die Werkstoffe von Neuteilen sind für das betreffende Kältemittel zertifiziert.

Im Zweifelsfall bitte mit Danfoss Kontakt aufnehmen.

Zeichnungen dienen nur zur Erläuterung, nicht zur Bemessung und Konstruktion.

Danfoss lehnt jede Verantwortung für Fehler und Auslassungen ab. Danfoss Industrial Refrigeration behält sich das Recht zu Produkt- und Spezifikationsänderungen ohne vorherige Ankündigung vor.

© Danfoss A/S (RC-CMS/MWA), 05 - 2005

Conception
Voir figure 1
1. Corps de vanne
1a et 1b. Canaux dans corps de vanne (1)
10. Tige de vanne
11. Cône d'étranglement
12. Siège de vanne
21a. Orifice d'équilibrage dans servopiston (24)
22. Contre-anneau
24. Servopiston
24a. Joint
30. Couvercle inférieur
33. Filtre
36. Bouchon de fond
40. Chapeau
40a, b, c et d. Canaux dans couvercle (40)
44. Prise manométrique
60. Tige d'ouverture manuelle
Raccords S I, S II et P pour vanne pilote

Fluides frigorigènes
Utilisables avec tous les fluides frigorigènes ininflammables courants (y compris le R717) et tous les fluides non corrosifs adaptés aux matériaux d'étanchéité. L'utilisation des hydrocarbures inflammables est déconseillée. L'utilisation de la vanne est uniquement conseillée dans les circuits fermés.
Si vous souhaitez en savoir davantage, veuillez contacter Danfoss.

Plage de température
PM: -60/+120°C (-76/+248°F)

Plage de pression
PM: Les vannes sont conçues pour fonctionner à une pression de service maximale de 28 bars g (406 psi g).

Caractéristiques techniques
La vanne PM 1 peut être utilisée dans les conduites d'aspiration, de liquide, de gaz chauds et de fluides à l'état liquide ou gazeux.
Elle permet de régler le débit du fluide par modulation ou fonction marche-arrêt, selon les impulsions de commande envoyées par les vannes pilotes vissées.

La vanne PM 3 est équipée de trois raccords pour vannes pilotes : les deux premiers, marqués "S I" et "S II", sont reliés en série, tandis que le dernier, marqué "P", est relié en parallèle aux deux autres (voir les figures 3 et 4).
Lorsque deux vannes pilotes seulement sont nécessaires pour assurer la fonction requise, le troisième raccord pilote doit être scellé à l'aide d'un bouchon obturateur (voir figure 4). Un bouchon obturateur est fourni avec la vanne.

Pression différentielle d'ouverture (Δp)
La vanne principale PM commence à s'ouvrir à partir d'une pression différentielle d'ouverture de 0,07 bar (1 psi) et elle est complètement ouverte lorsque la pression différentielle atteint 0,2 bar (2,8 psi).
Note : La vanne s'ouvre lorsque apparaît une pression différentielle dans le sens opposé au sens de l'écoulement.

Installation
Le jeu de brides de la vanne PM est fourni séparément. La vanne doit être installée en faisant correspondre l'orientation indiquée sur le corps de la vanne avec le sens d'écoulement et en dirigeant le couvercle supérieur vers le haut (figure 2). Il est possible de faire pivoter le couvercle supérieur de 4 X 90° par rapport au corps de la vanne.
La vanne est équipée d'une tige destinée à l'ouverture manuelle.
Lorsqu'une vanne pilote externe est utilisée, la conduite pilote doit être raccordée au côté supérieur de la conduite principale, afin d'éviter tout passage des impuretés et de huile de l'installation dans la conduite pilote.
Lorsque la vanne PM 1 doit être utilisée comme une électrovanne dans une conduite de liquide, il est déconseillé d'utiliser la pression de commande externe, car cette configuration peut entraîner l'apparition de coups de bélier.

La vanne est conçue pour résister à des pressions internes élevées. Cependant, il est souhaitable que la conception du réseau de canalisations empêche la formation de siphons et réduise ainsi le risque de pression hydraulique engendré par expansion thermique. Il convient de vérifier que la vanne est protégée des phénomènes de pression transitoires tels que les coups de bélier dans le système.

Soudage
En cas d'utilisation de brides soudées, seuls les matériaux et les méthodes de soudage compatibles avec le matériau des brides sont autorisés. Nettoyer intérieurement les brides et enlever les restes de soudure en fin de soudage, avant la mise en place de la vanne.

Ne soumettre le corps et les brides de la vanne à aucune tension (charges externes) après l'installation.

Les vannes PM ne doivent pas être montées dans les systèmes où le côté sortie de la vanne est ouvert à l'air atmosphérique.
Le côté sortie de la vanne doit toujours être raccordé au système ou correctement fermé, par exemple à l'aide d'une plaque d'extrémité soudée.

Couleurs et identification
Les vannes PM sont traitées en usine au chromate de zinc. Lorsqu'une protection supplémentaire contre la corrosion est exigée, les vannes peuvent être peintes. L'identification précise de la vanne se fait à l'aide de la plaque d'identification située sur le couvercle supérieur. La surface externe du corps de la vanne doit être protégée contre la corrosion à l'aide d'une application adéquate réalisée après l'installation et le montage.

Il est conseillé de protéger la plaque d'identification lors de la remise en peinture de la vanne.

Entretien
Les vannes PM sont aisément démontables et la plupart de leurs pièces sont interchangeables. Lorsque le couvercle inférieur est enlevé, il est possible de sortir le filtre pour le nettoyer. Ne pas ouvrir la vanne lorsqu'elle est encore sous pression.

- Vérifier que le joint torique n'a pas été endommagé.
- Vérifier que la tige est exempte d'éraflures et de marques d'impact.
- Si la bague en téflon a été endommagée, la remplacer.

Montage
Enlever toute trace d'impuretés du corps de la vanne avant le montage. Vérifier qu'aucun canal de la vanne n'est bloqué par des impuretés ou d'aucune autre manière.

Serrage (figure 6)
Couples de serrage
Voir tableau I.

Utiliser uniquement des composants Danfoss d'origine, en particulier pour tout remplacement du presse-étoupe ou des joints toriques et d'étanchéité. Les matériaux des nouveaux composants sont homologués pour le fluide frigorigène utilisé.

En cas de doute, veuillez prendre contact avec Danfoss.

Les plans sont fournis uniquement à titre indicatif et ne doivent pas servir pour le dimensionnement ou la conception.

Danfoss n'assume aucune responsabilité quant aux erreurs ou omissions éventuelles. Danfoss Industrial Refrigeration se réserve le droit d'apporter sans préavis toutes modifications à ses produits et à leurs spécifications.

Installazione

Design
Vedere fig. 1
1. Corpo della valvola
1a e 1b. Canali nel corpo della valvola (1)
10. Perno della valvola
11. Sede di tenuta
12. Cono logaritmico
21a. Foro di compensazione nel servo pistone (24)
22. Anello di bloccaggio
24. Servo pistone
24a. Guarnizione
30. Coperchio inferiore
33. Filtro
36. Connettore inferiore
40. Coperchio
40a, b, c e d. Canali nel coperchio (40)
44. Connessione manometro
60. Apertura manuale
S I, S II e P. Attacchi valvola pilota

Refrigeranti
Applicabile a tutti i refrigeranti comuni non infiammabili, compreso l'R717 e i gas/liquidi non corrosivi, in base alla compatibilità con il materiale di tenuta. Gli idrocarburi infiammabili sono sconsigliati. La valvola è consigliata unicamente per l'uso in circuiti chiusi. Per ulteriori informazioni contattare Danfoss.

Campo di temperatura
PM: –60/+120°C (–76/+248°F)

Campo di pressione
PM: le valvole sono progettate per una pressione massima d'esercizio di 28 bar g (406 psi g).

Dati tecnici
La valvola PM1 può essere utilizzata con linee di aspirazione, liquido, gas caldo e vapore/liquido. La valvola PM1 regola il flusso del mezzo tramite la funzione di modulazione o on/off, che dipende dall'impulso di controllo proveniente dalle valvole pilota installate. La valvola PM3 ha tre connessioni per valvole pilota: due in serie, contrassegnate da "S I" e "S II", e una in parallelo a queste due, contrassegnata da "P", figg. 3 e 4.

Se sono sufficienti due valvole pilota per la funzione richiesta, il terzo attacco deve essere chiuso con un tappo cieco (vedere fig. 4). Il tappo cieco viene fornito con la valvola.

Pressione differenziale d'apertura (Δp)
La valvola principale PM richiede un differenziale d'apertura minimo di 0,07 bar (1 psi) per iniziare ad aprirsi e di 0,2 bar (2,8 psi) per aprirsi completamente.
Nota bene: la valvola si apre quando il differenziale di pressione va contro la direzione del flusso.

Installazione
Il set di flange per la valvola PM viene consegnato a parte. La valvola deve essere installata con la freccia nella direzione del flusso e il coperchio superiore rivolto verso l'alto (fig. 2). Il coperchio superiore può essere ruotato di 4 X 90° rispetto al corpo della valvola. La valvola è dotata di un perno per l'apertura manuale.

Se viene utilizzata una valvola pilota esterna, la linea pilota deve essere collegata alla parte superiore della tubazione. In tal modo la sporcizia e l'olio dell'impianto non penetreranno nella linea pilota.
Se la valvola PM 1 viene usata come valvola solenoide in una linea del liquido, la pressione di controllo esterna non può essere raccomandata in quanto può provocare un colpo d'ariete.

La valvola è progettata per resistere ad un'elevata pressione interna. Tuttavia, il sistema di tubazioni dovrebbe essere progettato in modo da evitare raccolte di liquido e ridurre il rischio di pressione idraulica causata dall'espansione termica. Si deve verificare che la valvola sia protetta da pressioni transitorie quali i "colpi d'ariete" all'interno del sistema.

Saldatura
Se si utilizzano flange a saldare, si potranno impiegare solamente materiali e metodi di saldatura compatibili con il il materiale della flangia. Le flange devono essere pulite internamente per rimuovere residui di saldatura al termine della stessa e prima dell'inserimento della valvola.

La sede della valvola e delle flange non dev'essere sottoposta a pressioni (carichi esterni) dopo l'installazione.

Le valvole PM non devono essere montate su sistemi in cui il lato di sbocco della valvola è aperto all'atmosfera. Il lato di sbocco della valvola deve essere sempre collegato al sistema o coperto adeguatamente, ad esempio con una piastra terminale saldata su di esso.

Colori ed identificazione
Le valvole PM vengono zinco-cromate in fabbrica. Se si richiede un'ulteriore protezione contro la corrosione, le valvole possono essere verniciate. Un'identificazione precisa della valvola è possibile grazie alla targhetta di identificazione situata sul coperchio superiore. La superficie esterna della sede della valvola deve essere protetta dalla corrosione mediante un rivestimento protettivo adatto, applicato dopo l'installazione e l'assemblaggio.

Si consiglia la protezione della targhetta di identificazione durante la verniciatura della valvola.

Servizio di manutenzione

Service
Le valvole PM sono facili da smontare e la maggior parte dei loro componenti sono sostituibili. Quando viene tolto il coperchio inferiore, il filtro può essere estratto per essere pulito. Non aprire la valvola mentre questa si trova ancora sotto pressione.

- Controllare che l'O-ring non sia danneggiato.
- Controllare che il perno non presenti graffi o segni dovuti ad urti.
- Se l'anello in Teflon ha subito danni, le parti devono essere sostituite.

Assemblaggio
Eliminare tutta la sporcizia dal corpo della valvola prima di procedere all'assemblaggio. Controllare che i canali all'interno della valvola non siano ostruiti da particelle o elementi simili.

Serraggio (fig. 6)
Coppie di serraggio
Vedere tabella I.

Utilizzare solamente ricambi originali Danfoss, comprese le guarnizioni di tenuta, gli O-ring e le guarnizioni di ricambio. I materiali delle nuove parti sono certificati per il refrigerante corrispondente.

In caso di dubbio, contattare Danfoss.

I disegni sono solo a scopo illustrativo, non per il dimensionamento o la struttura.

Danfoss non si ritiene responsabile di errori od omissioni. Danfoss Industrial Refrigeration si riserva il diritto di effettuare modifiche ai prodotti e alle caratteristiche tecniche degli stessi senza alcun preavviso.

© Danfoss A/S (RC-CMS/MWA), 05 - 2005

INSTRUCTIONS

EVR 2 - 22, Normally Closed/Normally Open (NC/NO)

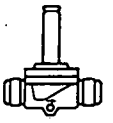

032R9500

Refrigerants CFC, HCFC, HFC

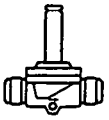

EVR 2, 3, 4, 6, 8, 10 (NC flare)

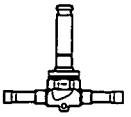

EVR 6, 10 (NO solder)

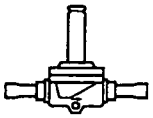

EVR 2, 3, 4, 6, 8, 10 (NC solder)

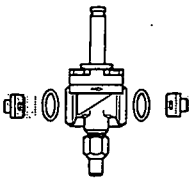

EVR 15, 20 (NC)

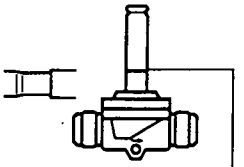

EVR 6, 10 (NO)

Note: tube construction

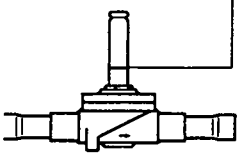

EVR 15 (NO solder)

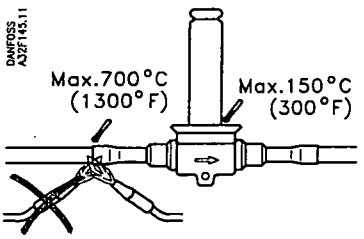

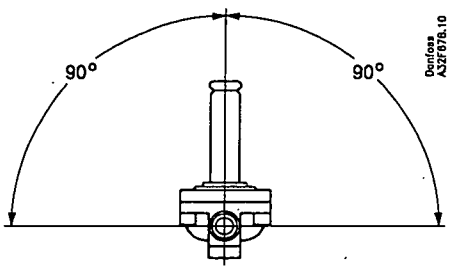

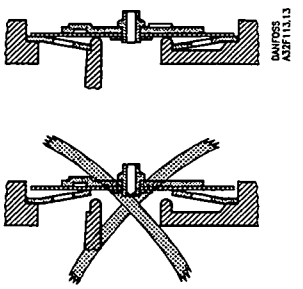

EVR	Nm	kpm	ft-lbs	Torx size
2-3	1.4	0.15	1	T 15

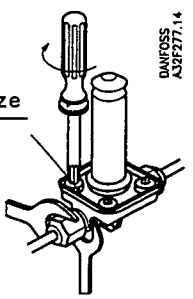

EVR	Nm	kpm	ft-lbs	Torx size
4,6,8	1.4	0.14	1	T 20
10,15,18	2.8	0.3	2	T 25
20,22	12	1.2	9	T 40

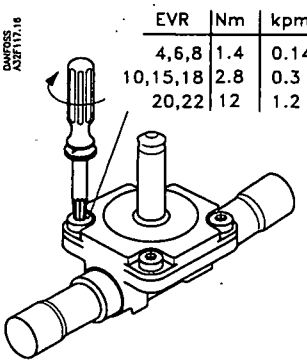

9 W a.c. EVR 2 — $t_{max.}$ 40°C (105°F)

10/12 W a.c. — $t_{max.}$ 80°C (175°F)

20 W d.c. — $t_{max.}$ 50°C (120°F)

10 W a.c. — $t_{max.}$ 55°C (130°F)

$t_{min.}$ -40°C (-40°F)

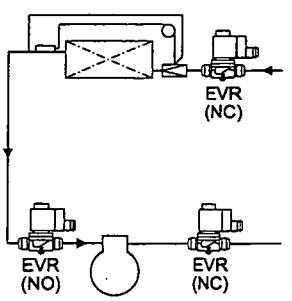

Min. medium temperature: -40°C (-40°F)
Max. medium temperature: 105°C (221°F)
Max. working pressure:EVR2-10 PB=35bar
Max. working pressure:EVR15-22 PB=32bar
Max. opening diff. pressure (MOPD): →

Danfoss A32F593.11

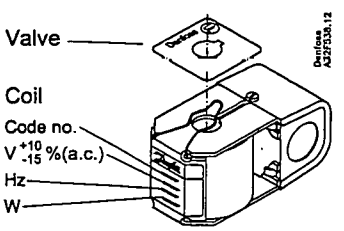

Caution
Wiring and fusing (when used) must comply with prevailing local and national wiring codes and ordinances.

© Danfoss A/S 02-2003

032R9500

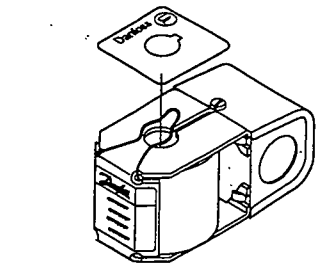

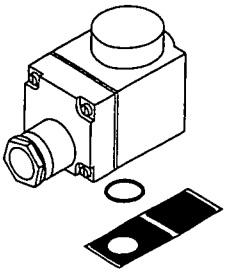

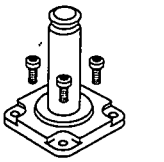

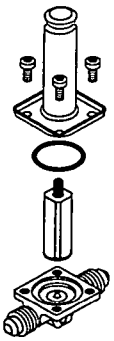

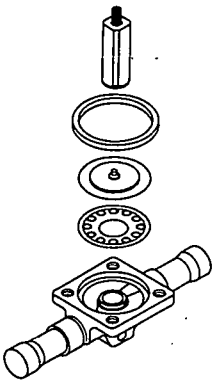

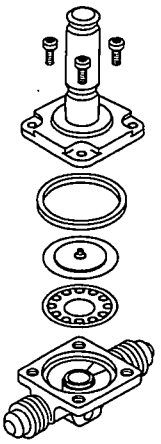

EVR 2, 3 (NC)

EVR 4 - 22 (NC)

EVR 6 - 20 (NO)

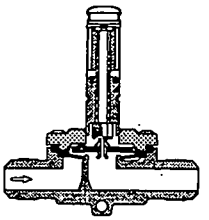

EVR 6 - 20 (NO)

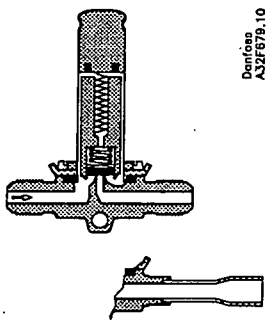

EVR 3 (NC)

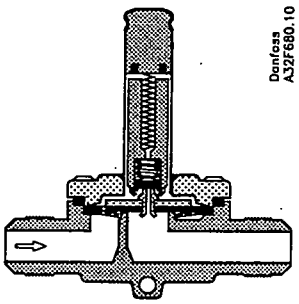

EVR 4 - 22 (NC)

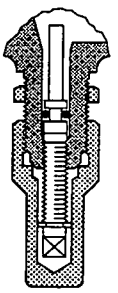

EVR 4 - 10 (NC)

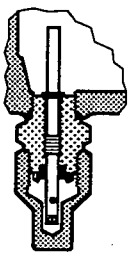

EVR 15 - 22 (NC)

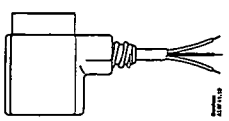

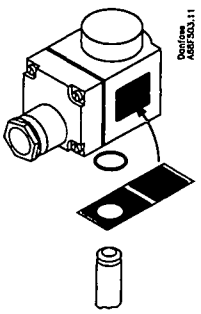

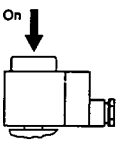

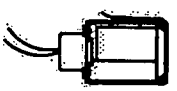

Conduit coil

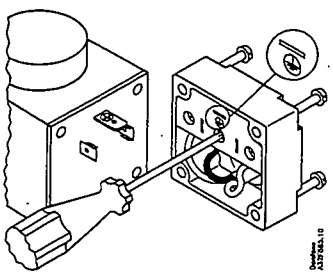

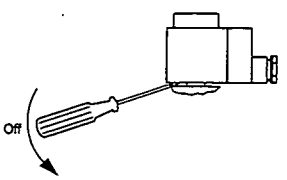

Junction box

© Danfoss A/S, (IC-MC,mr) 02 - 2003

Refrigeration Controls

Instructions

CVQ

027R9626

RI4JK100

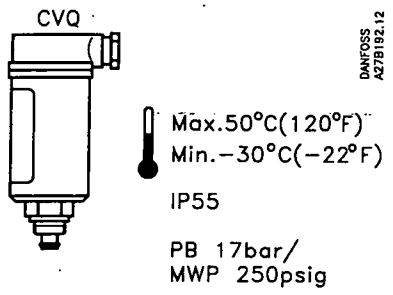

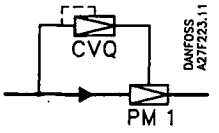

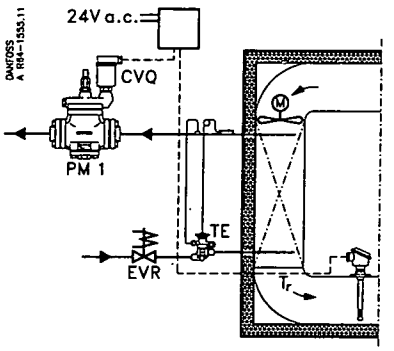

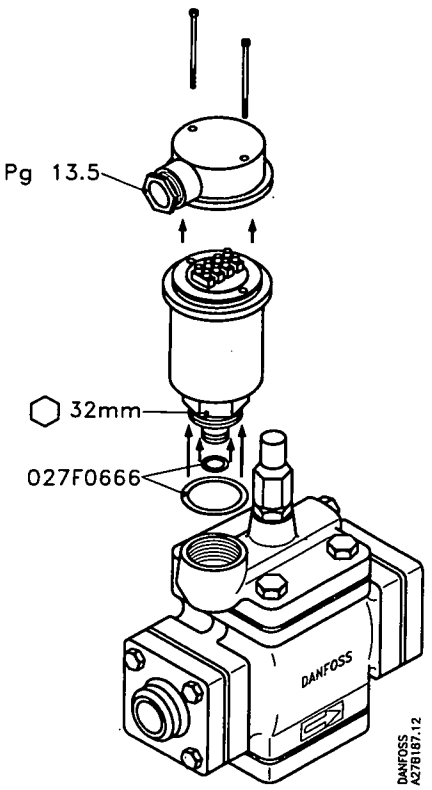

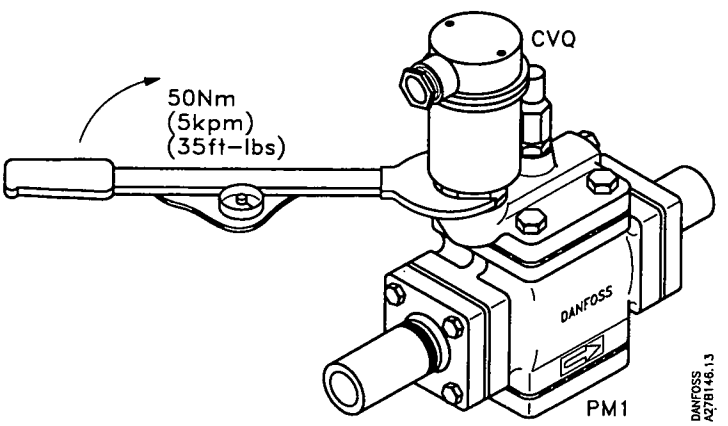

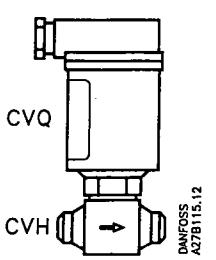

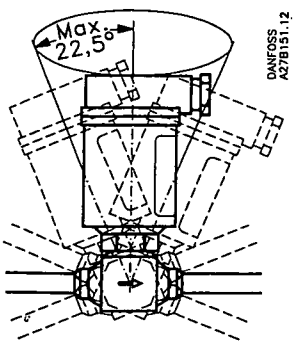

© Danfoss A/S, AC-RDT

INSTRUCTIONS

TE 5, TE 12, TE 20, TE 55

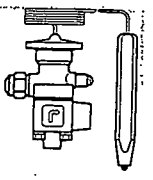

067R9504

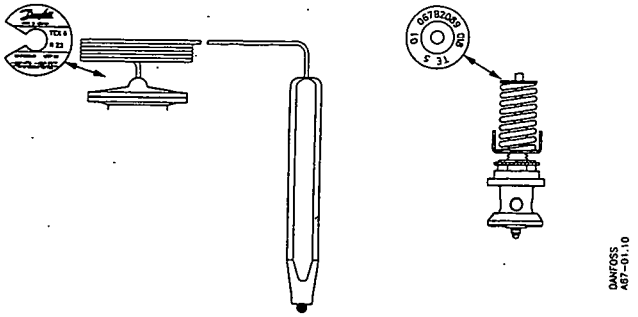

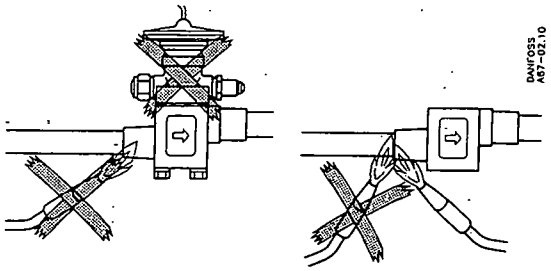

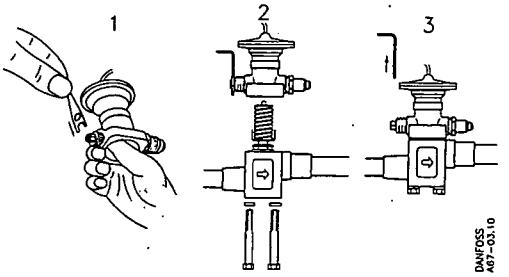

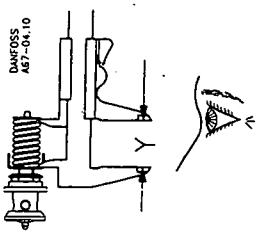

Range N = −40°C → +10°C (−40°F → +50°F)
Range B = −60°C → −25°C (−75°F → −15°F)

TE 5

Orifice no.	Orifice code no.	Y = ±1 mm							
		R 22 Range N	R 22 Range B	R 134a Range N	R 404A Range N	R 404A Range B	R 12 Range N	R 502 Range N	R 502 Range B
01	067B2089	26	26	27	27.5	27.5	28	26	26
02	067B2090	26	26	27	27.5	27.5	28	26	26
03	067B2091	26	26	27	27.5	27.5	28	26	26
04	067B2092	26	26	27	27.5	27.5	28	26	26

TE 12

Orifice no.	Orifice code no.	Y = ±1 mm							
		R 22 Range N	R 22 Range B	R 134a Range N	R 404A Range N	R 404A Range B	R 12 Range N	R 502 Range N	R 502 Range B
01	067B2005	35	35	35	36	36	36	32	32
02	067B2006	35	35	35	36	36	36	32	32
03	067B2007	35	35	35	36	36	36	32	32
04	067B2008	35	35	35	36	36	36	32	32

TE 20

Orifice no.	Orifice code no.	Y = ±1 mm							
		R 22 Range N	R 22 Range B	R 134a Range N	R 404A Range N	R 404A Range B	R 12 Range N	R 502 Range N	R 502 Range B
01	067B2170	-	-	32	-	-	34	-	-
02	067B2172	33.5	36	-	-	-	-	-	-
03	067B2175	-	-	-	35	35	-	33	33

TE 55

Orifice no.	Orifice code no.	Y = ±1 mm							
		R 22 Range N	R 22 Range B	R 134a Range N	R 404A Range N	R 404A Range B	R 12 Range N	R 502 Range N	R 502 Range B
01	067G2001	-	-	31	33	33	33	-	-
02	067G2002	-	-	31	33	33	33	-	-
01	067G2005	32	34	-	-	-	-	-	-
02	067G2006	32	34	-	-	-	-	-	-
01	067G2011	-	-	-	-	-	-	33	34
02	067G2012	-	-	-	-	-	-	33	34

SH= SuperHeat

SH= 4°C (7°F)

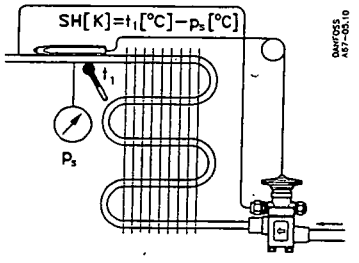

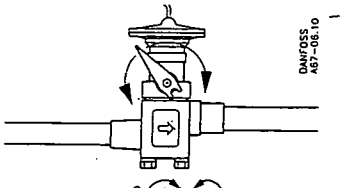

360° ⊕ ⊖

TE5,TE12: { N ~ 0.5 °C (1 °F) SH / B ~ 1.5 °C (3 °F) SH

TE20,TE55: { N ~ 0.5 °C (1 °F) SH / B ~ 1.0 °C (2 °F) SH

© Danfoss A/S

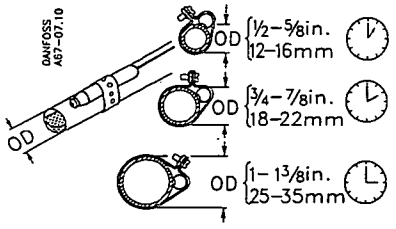

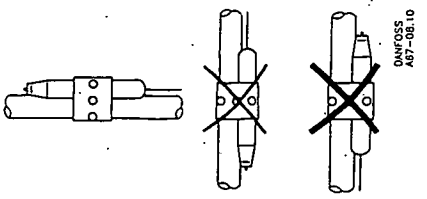

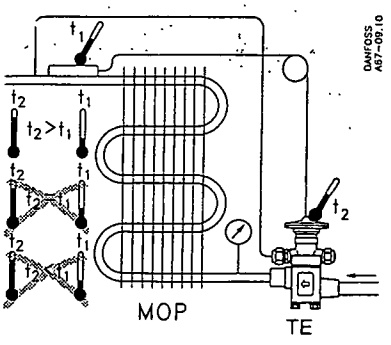

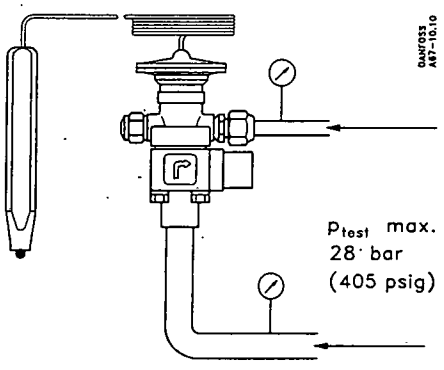

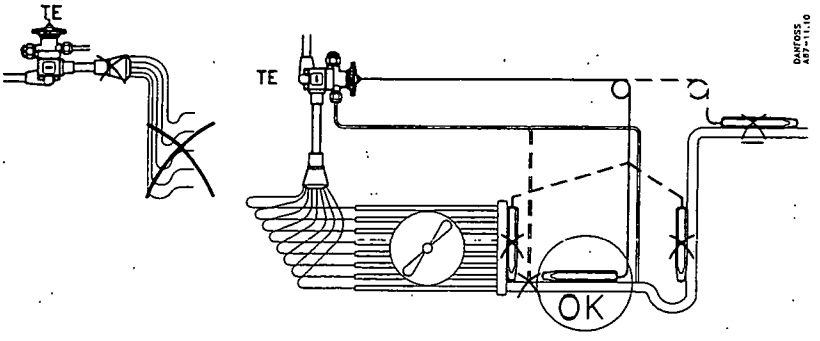

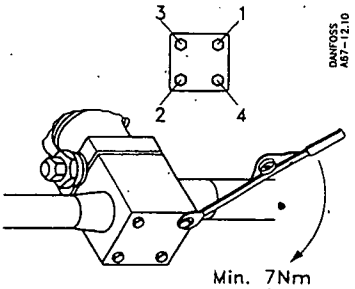

Min. 7Nm
(0.7kpm/5ft-lbs)
Max. 10Nm
(1kpm/7ft-lbs)

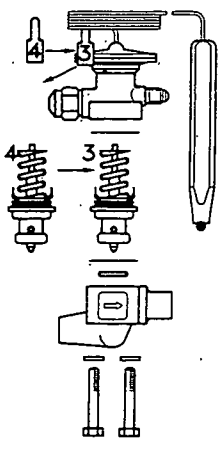

TE 5

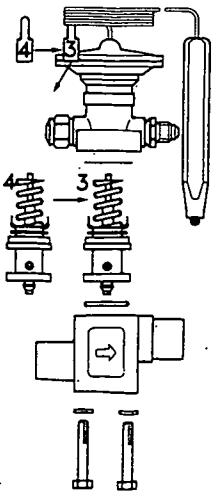

TE 5, TE 12, TE 20

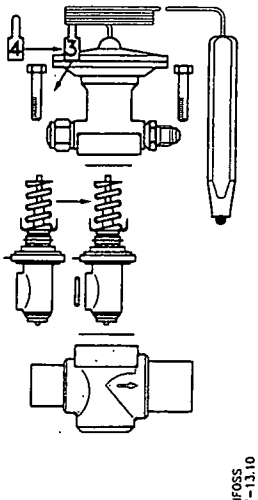

TE 55

DANFOSS A67-13.10

 © Danfoss A/S

Instructions

060R9747

Pressure Controls
KP 15, KP 17W, KP 17B, KP 25

060R9747

Types
The controls can be used with CFC, HFC, HCFC refrigerants.

CAUTION: Do not install these controls on ammonia systems

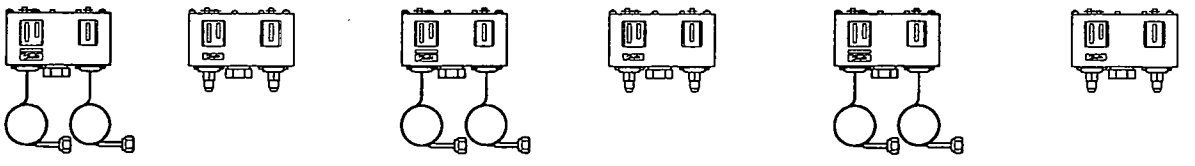

KP 15 man. (LP) / man. (HP) reset | **KP 15, KP 17B auto. (LP) / man. (HP) reset** | **KP 15, KP 17W, KP 25 auto. (LP) / auto (HP) reset**

Ambient temperatures

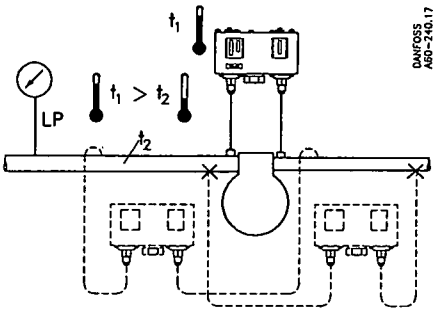

t_1 min. KP 15, KP 25: −40°F (−40°C)
KP 17W, KP 17B: −13°F (−25°C)
t_1 max. 150°F (65°C)

CAUTION: Do not mount the control in a position where dirt, sediment, or oil will affect the operation of the control.

Test pressure (p_{TEST})

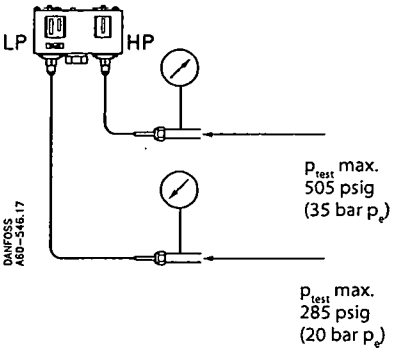

Enclosure

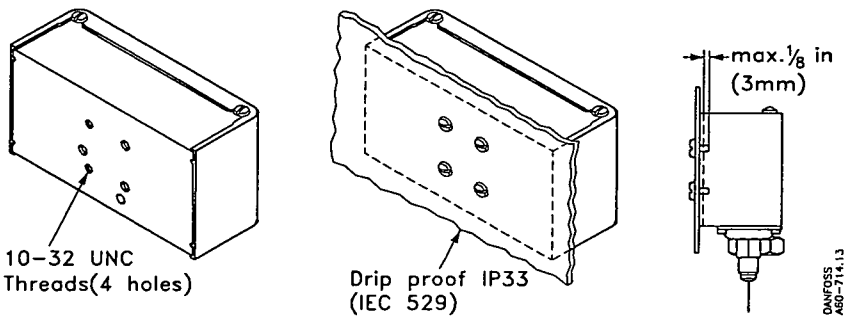

CAUTION: The mounting panel must be plane to avoid damage of control.

©Danfoss A/S

Connections

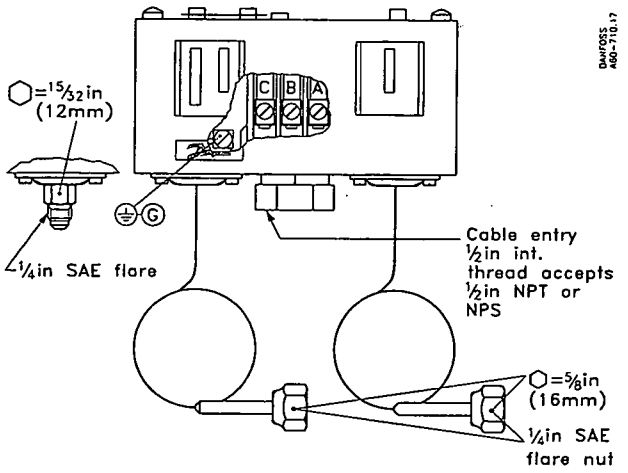

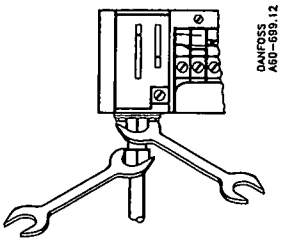

Wiring

CAUTION: Disconnect power supply before wiring connections are made to avoid possible electrical shock or damage to equipment.

All wiring should conform to the National Electrical Code and local regulations.

SPDT

Controls with low pressure (LP) signal

Terminal block

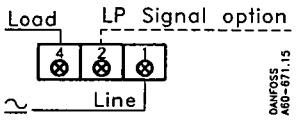

CAUTION: Use terminal screws furnished in the contact block.
Use tightening torque 20 lb. in (2.3 Nm).
Use copper wire only.

Low pressure (LP) side:
A-C close on LP rise
A-C open on LP drop

High pressure (HP) side.
A-C open on HP rise
A-C close on HP drop

LP signal option:
A-B close on LP drop

See label for current wiring inside cover

Controls with low pressure (LP) and high pressure (HP) signal)
KP 15 and KP 17W. Only code nos.:
060-2024060-2027 060-2030
060-2026060-2029 060-2031
(stamped on top of control)

Terminal block

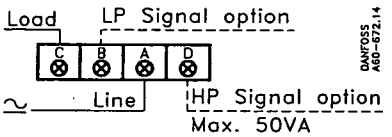

CAUTION: Use terminal screws furnished in the contact block.
Use tightening torque 20 lb. in (2.3 Nm).
Use copper wire only.

Low pressure (LP) side:
A-C close on LP rise
A-C open on LP drop

High pressure (HP) side.
A-C open on HP rise
A-C close on HP drop

LP signal option:
A-B close on LP drop

HP signal option:
A-D close on HP rise

Contact load ratings

120 V a.c.	16 FLA, 96 LRA
240 V a.c.	8 FLA, 48 LRA
240 V d.c.	12 W pilot duty

See label inside cover

Function

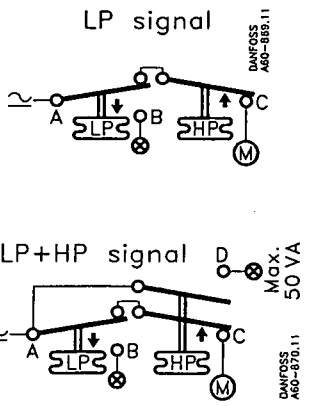

Note!
Ⓜ = Load
⊗ = Signal option
= Bellows movement on pressure rise
¬ = Bellows movement on pressure drop

Manual tripping
(Electrical contacts/wiring test)

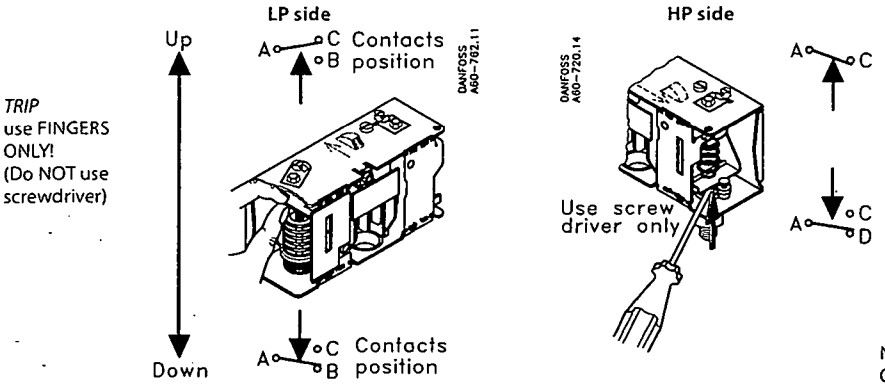

Note:
On controls with LP and/or HP man. reset, push corresponding LP and/or HP man. reset knob during tripping.

Manual tripping

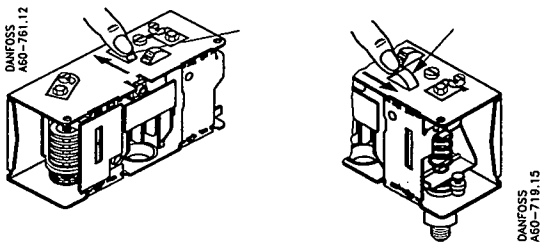

To resume control operation after safety cut-out, push man. reset knob as indicated.

Note:
LP man. reset is possible only after system pressure has risen above cut-in value.

HP man. reset is possible only after system pressure has dropped below cut-out value.

Convertible reset
KP 15, code nos.: 060-2025, 060-2028

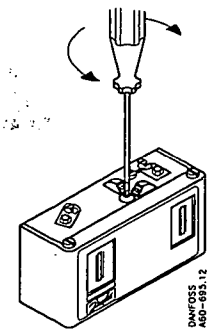

Turn plate to desired reset configuration

Reset options

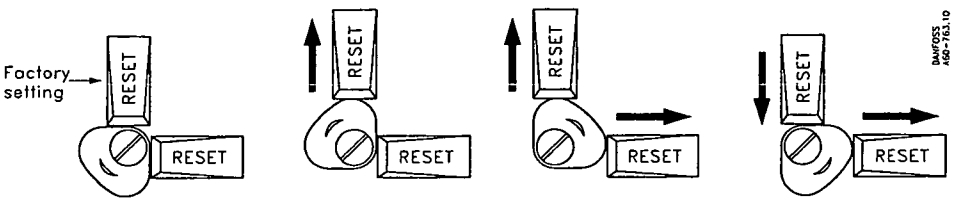

LP man.
HP-man.

LP-auto.
HP-man.

LP-auto.
HP-auto.

LP-man.
HP-auto.

Adjustment spindle(s) location

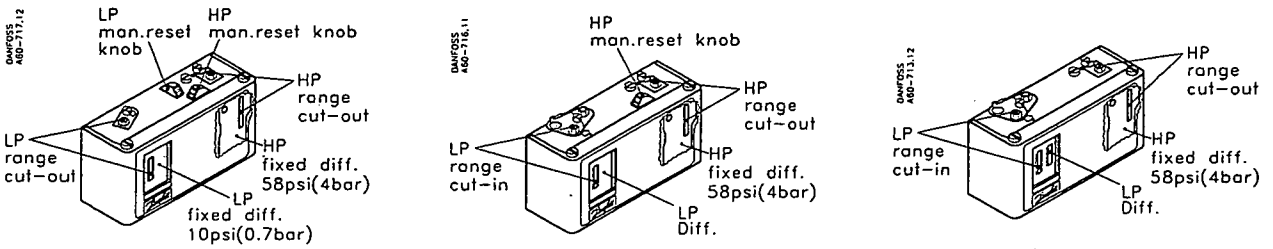

KP 15

A. MAN./MAN. RESET

KP 15, KP 17B

B. AUTO/MAN. RESET

KP 15, KP 17W, KP 25

C. AUTO./AUTO. RESET

Setting

Low pressure (LP) side setting

KP 15, KP 17W, KP 17B and KP 25 with LP auto. reset only

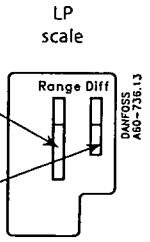

1. Adjust range spindle to desired CUT-IN value.
2. Adjust differential spindle to desired DIFFERENTIAL (DIFF.) value.

CUT-IN minus DIFFERENTIAL equals CUT-OUT

Example:

CUT-IN	–	DIFF.	=	CUT-OUT
30 psig	–	10 psi	=	20 psig
(2.1 bar)		(0.7 bar)		(1.4 bar)

KP 15 with LP man. reset only
KP 15 with convertible LP auto.) man. reset

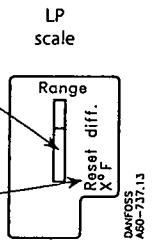

1. Adjust range spindle to desired CUT-OUT value.
2. DIFFRENTIAL (DIFF.) is fixed. Value printed on scale plate.

CUT-IN equals CUT-OUT plus DIFFERENTIAL

Example:

CUT-OUT	+	DIFF.	=	CUT-IN
12 psig	+	10 psi	=	22 psig
(0.8 bar)		(0.7 bar)		(1.5 bar)

High pressure (HP) side setting

KP 15, KP 17W, KP 17B and KP 25 with HP auto. or man. reset

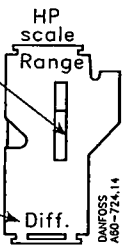

1. Adjust range spindle to desired CUT-OUT value.
2. DIFFERENTIAL (DIFF.) is fixed. Value printed on scale plate.

CUT-OUT minus DIFFERENTIAL equals CUT-IN

Example:

CUT-OUT	–	DIFF.	=	CUT-IN
203 psig	–	58 psi	=	145 psig
(14 bar)		(4 bar)		(10 bar)

Adjustment

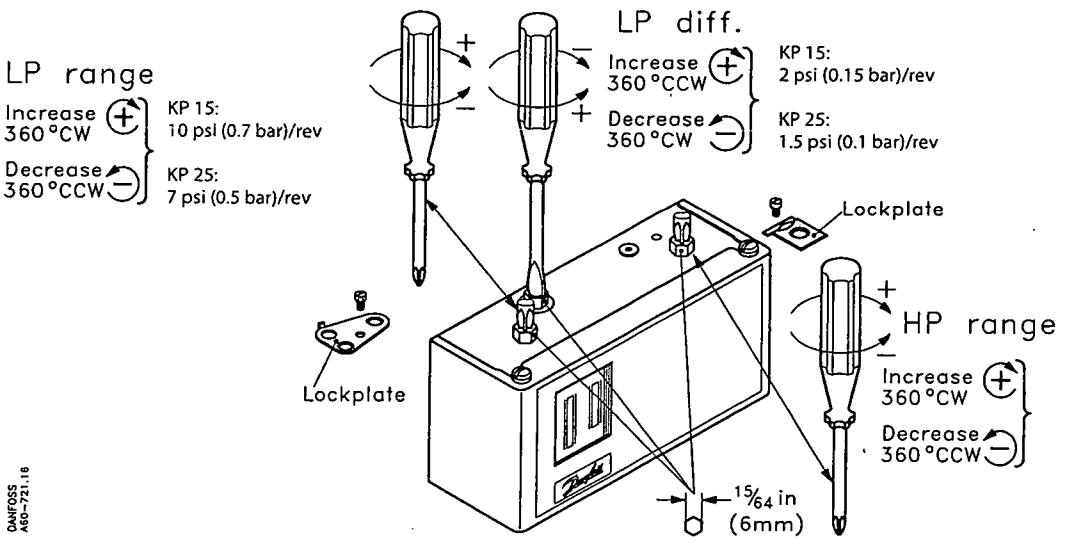

Note:
Remove lockplate before adjustment.
Replace lockplate after adjustment (if desired).

©Danfoss A/S IC-MC/mr 02-2005

INSTRUCTIONS

WVFX 10 - 25

003R9743

HFC, HCFC, CFC

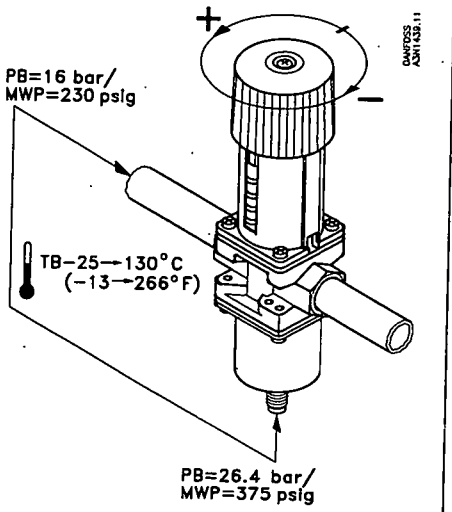

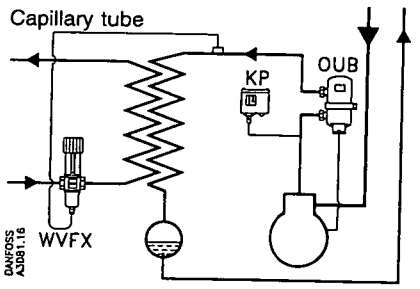

003R9743

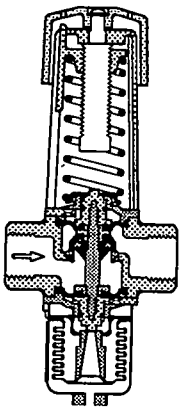

Spare parts: See Spare Parts catalogue

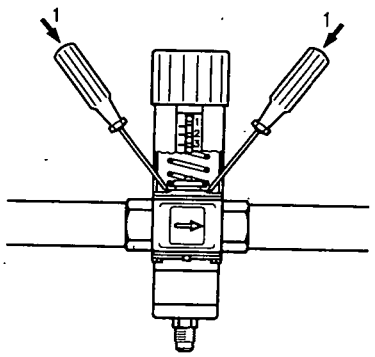

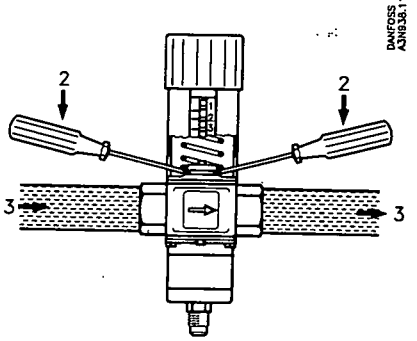

© Danfoss A/S (IC-MC)

Instruction

DML / DCL Filter Drier

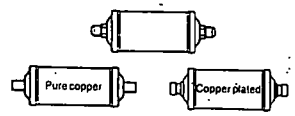

023R9514

DML: R134a, R404A, R407C, R410A, R507, R22 et al.
DCL: R12, R22, R502 et al.

Pure copper solder versions
Lötausführungen aus reinem Kupfer
Versions à braser avec cuivre pur
Versiones soldar cobre puro
Versioni a brasare in rame puro
純銅継手による仕様
纯铜焊接型
Паяные соединения из чистой меди

Flare / face seal versions (ORS) / copper plated solder versions
Bördel-/Dichtflächenausf. (ORS) / verkupferte Lötausführungen
Versions flare/joint facial (ORS) / versions à braser avec placage cuivre
Versiones abocardadas / sello de junta tórica / acero chapado de cobre para soldar
Versioni a cartella / ad attacco rapido con O-ring / versioni ramate a brasare
フレア継手 / 面シール(ORS) / 銅メッキ継手仕様
喇叭口 / 端面密封型 (ORS) / 镀铜焊接型
Под отбортовку (с кольцевым уплотнением) / паяные соединения с медным покрытием

Symbol / Symbol / Symbole / Simbolo / Simbolo / シンボル / 标记 / Символ	Connection / Anschluss / Raccord / Conexión / Connessione / 接続サイズ / 连接尺寸 / Соединение	Max. working pressure / Max. zul. Betriebsüberdruck / Pression de service maximale / ¡Presión de trabajo máx.! / Massima pressione operativa! / 最高使用圧力 / 最大工作压力 / Макс. рабочее давление
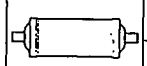	1/4" 3/16" 5/16" 3/8" 1/2"	610 psig / 42 bar 610 psig / 42 бар
	5/8" 7/8"	507 psig / 35 bar 507 psig / 35 бар
	1 1/8"	435 psig / 30 bar 435 psig / 30 бар

Symbol / Symbol / Symbole / Simbolo / Simbolo / シンボル / 标记 / Символ	Connection / Anschluss / Raccord / Conexión / Connessione / 接続サイズ / 连接尺寸 / Соединение	Max. working pressure / Max. zul. Betriebsüberdruck / Pression de service maximale / ¡Presión de trabajo máx.! / Massima pressione operativa! / 最高使用圧力 / 最大工作压力 / Макс. рабочее давление
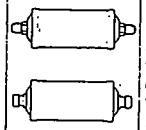	All sizes Alle Größen Toutes tailles Todos los tamaños Tutte le dimensioni すべてのサイズ 所有规格 Все размеры	610 psig / 42 bar 610 psig / 42 бар

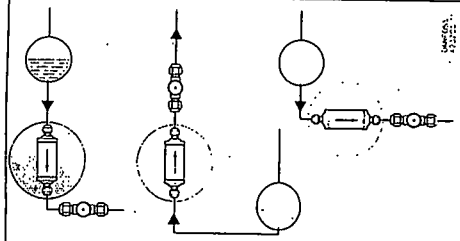

Note!
Max. working pressure (PB/MWP) shall not be less than the pressure outlined in sect. 8.2 of ANSI / ASHRAE 15 for the refrigerant used in the system.
After charging, the system shall be marked with the refrigerant and the oil used.

Anmerkung!
Der max. Betriebsüberdruck darf nicht kleiner als der in Abschn. 8.2 von ANSI / ASHRAE 15 angegebene Druck für das in der Anlage verwendete Kältemittel sein.
Nach dem Befüllen ist die Anlage mit Angaben über das verwendete Kältemittel und Öl zu kennzeichnen.

Attention!
La pression de service maximale (PB/MWP) ne doit pas être inférieure à la pression définie au chapitre 8.2 des ANSI / ASHRAE 15 pour les fluides frigorigènes utilisés dans le système.
Après remplissage, indiquer sur le système les fluides frigorigènes et huiles utilisées.

¡Atención!
La presión de trabajo máx. (PB/MWP) no debe ser menor que la presión especificada en ANSI / ASHRAE 15, apartado 8.2 para el refrigerante utilizado en el sistema.
Después de la carga, se deberá marcar el sistema con el refrigerante y aceite utilizados.

Nota bene!
La massima pressione operativa (PB/MWP) non deve essere minore della pressione specificata nel paragrafo 8.2 di ANSI / ASHRAE 15 per il refrigerante utilizzato nel sistema.
A caricamento avvenuto, il sistema dovrà essere contrassegnato con il refrigerante e l'olio utilizzati.

注意
使用する冷媒のANSI/ASHRAE 15の8.2に記載されている圧力がフィルタドライヤの最高使用圧力以下である事を確認して使用して下さい
装置にチャージした冷媒および冷凍機油を明記して下さい

注意!
最大工作压力(PB/MWP)应不小于ANSI/ASHRAE15, 8.2中注明的系统所用制冷剂的压力。
充注后应注明系统所用的制冷剂和润滑油。

Примечание!
Максимальное рабочее давление (PB/MWP) не должно быть ниже, чем давление, приведенное в разделе 8.2 ANSI / ASHRAE 15 (Американское Общество инженеров теплотехники, искусственного холода и кондиционирования воздуха/Американский Национальный Институт Стандартизации) для хладагента, использующегося в системе.
После заправки системы на ней следует обозначить тип используемого хладагента и масла.

⚠ SAFETY WARNING. SEE REVERSE SIDE.
⚠ SICHERHEITSHINWEIS. BITTE BEACHTEN SIE DIE RÜCKSEITE.
⚠ TOURNER LA PAGE S.V.P.: INFORMATION IMPORTANTE.
⚠ ADVERTENCIAS DE SEGURIDAD. VER REVERSO.
⚠ AVVISO DI SICUREZZA - GUARDARE IL RETRO.
⚠ 安全注意事項：裏面参照
⚠ 安全注意事项，请参看背面。
⚠ Инструкция по безопасности. Смотри обратную сторону.

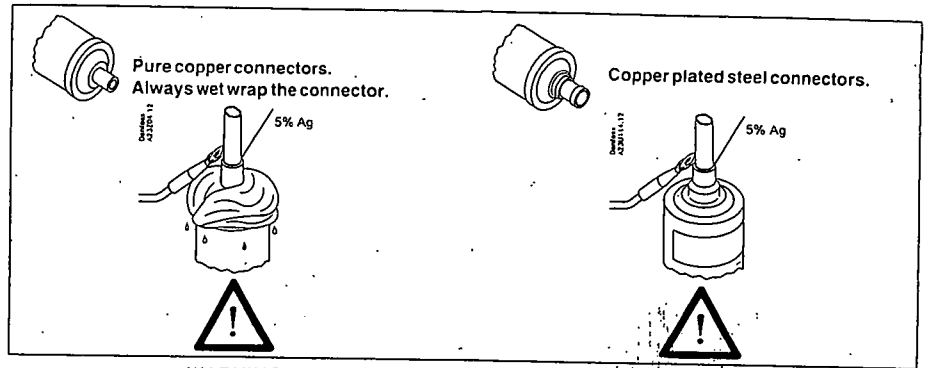

WARNING

Potential Harmful Fumes During Soldering

Only solder in a WELL-VENTILATED area. When soldering, only apply heat to the connection with the flame pointed away from the Filter Drier. Excess heating of the paint may cause toxic fumes. Exposure to these fumes may cause skin and eye irritation, and damage internal organs. For pure copper connectors, always wet wrap the connector.

ACHTUNG

Beim Löten können gefährliche Dämpfe entstehen

Lötarbeiten dürfen nur in GUT BELÜFTETEN Bereichen vorgenommen werden. Beim Löten nur den Stutzen erhitzen, wobei die Flamme vom Trockenfilter weg gerichtet sein muss. Bei Überhitzung des Anstrichs können giftige Dämpfe entstehen. Diese Dämpfe können zu Haut- und Augenirritationen führen und inneren Organen Schäden zufügen. Bei Anschlüssen aus reinem Kupfer den Anschluss immer feucht einwickeln.

AVERTISSEMENT

Risque d'émission de fumées toxiques pendant le brasage

Braser uniquement dans une zone BIEN VENTILÉE. Pour effectuer le brasage, appliquer la chaleur uniquement sur le raccord ; ne pas diriger la flamme vers le filtre déshydrateur. Une surchauffe de la peinture peut entraîner un dégagement de fumées toxiques. Une exposition à ces fumées peut causer une irritation de la peau et des yeux, ainsi que des lésions des organes internes. Toujours envelopper les raccords en cuivre pur dans un chiffon humide.

ADVERTENCIA

Humos tóxicos durante la soldadura

Soldar únicamente en un área BIEN VENTILADA. Al soldar, sólo aplicar calor en la conexión con la llama en dirección contraria al filtro secador. El calentamiento excesivo de la pintura puede originar humos tóxicos. El contacto con estos humos puede causar irritaciones en la piel y en los ojos, y también puede dañar los órganos internos. Para conectores de cobre puro, envolver siempre el conector con paño húmedo.

ATTENZIONE

Fumi tossici durante la saldatura

Saldare esclusivamente in ambienti BEN VENTILATI. Al momento della saldatura, applicare il calore alla connessione soltanto con la fiamma in direzione opposta al filtro essiccatore. Un eccessivo riscaldamento della vernice può provocare fumi tossici. L'esposizione a tali fumi può causare irritazione alla pelle e agli occhi, nonché lesioni agli organi interni. Per i connettori in rame puro, avvolgere sempre uno straccio bagnato attorno al connettore.

警告

ろう付け中に有害なガスが発生する恐れがあります。

ろう付け作業は、換気が行き届いた場所で行ってください。ろう付け時は炎の方向をフィルタドライヤ本体側に向けず、継手を過熱してください。
塗装を加熱しすぎると有害なガスが発生することがあります。このガスに触れると肌や目がかゆくなったり、内臓器官が害を受けたりすることがあります。
純銅製のコネクターの場合は、コネクターを必ず濡れた布でくるんでください。

警告！

焊接时有可能产生有害的烟尘

只能在通风良好的地方焊接。焊接时将火焰对着与干燥过滤器体相反的方向加热接管。
过烧会使漆产生有害的烟尘，暴露在这些烟尘下会引起皮肤和眼睛发炎，并会损害内部器官。
采用纯铜接管时，应随时用湿布包裹接管。

ПРЕДУПРЕЖДЕНИЕ

Вероятность появления вредных дымов во время пайки

Производите пайку только в ХОРОШО ПРОВЕТРИВАЕМЫХ помещениях. При пайке нагревайте только соединение, так чтобы пламя не было направлено на фильтр-осушитель. Перегрев красочного покрытия может вызвать появление токсичного дыма. Воздействие этого дыма может привести к раздражению кожи и слизистой оболочки, а также нанести вред внутренним органам.
При пайке соединений из чистой меди всегда оборачивайте соединение мокрой тканью.