INSTRUCTIONS HANDBOOK

STAR COMPACT 60
STAR COMPACT 120

PROMAG

LE MACCHINE PER IL GELATO

PROMAG ALI S.p.A.

Via Emilia, 45A - 40011 Anzola Emilia (Bologna) - Italy

Tel. (051) 6505358 - Fax (051) 6505253

INDEX

SECTION 4 - INSTRUCTIONS FOR USE

SECTION 5 - SAFETY DEVICES

SECTION 6 - CLEANING, DISASSEMBLING AND REASSEMBLING PARTS IN CONTACT WITH THE PRODUCT

SECTION 7 - MAINTENANCE

SECTION 8 - TROUBLESHOOT GUIDE

FOREWORD

INSTRUCTIONS HANDBOOK

Editing this handbook, community directions on safety standards as well as on free circulation of industrial products within E.C. (R.E.C. Council direction 89/392 and subsequent, known as "Machines Direction") were taken into due account.

PURPOSE

This handbook was edited while taking needs of machine users into due account.
Topics relevant to a correct use of the machine have been analyzed in order to keep unchanged in the long run quality features characterizing **PROMAG** machines throughout the world.
A significant part of this handbook refers to the conditions necessary to the machine use and to the necessary behaviour during cleanout as well as routine and special maintenance.
Nevertheless, this handbook cannot meet in details all demands; in case of doubts or failing information, please apply to:

PROMAG ALI S.p.A - Via Emilia, 45A - 40011 Anzola Emilia (Bologna) - Italy Tel. (051) 6505330 - Fax (051) 6505331

HANDBOOK STRUCTURE

This handbook is structurilized in sections, chapters and subchapters in order to consult it more easily.

Section

A section is the part of handbook identifying a specific topic referred to a machine part.

Chapter

A chapter is that part of section describing a group or concept relevant to a machine part..

Subchapter

It is that part of a chapter detailing the specific component of a machine part.
It is necessary that each person involved in the machine running reads and clearly understands those parts of the handbook of own concern, and particularly:

- The Operator must have a look at chapters concerning the machine start-up and the operation of machine groups.
- A skilled technician employed in installation, maintenance, repair, etc., must read all parts of this handbook.

ADDITIONAL DOCUMENTATION

Along with an instruction manual, each machine is also supplied complete with further documentation:

- **Machine equipment**: A list of spare parts delivered together with the machine for its maintenance.
- **Wiring diagram**: A diagram of wiring connections put into the machine.

ATTENTION!

Before operating the machine, carefully read this handbook.

Also carefully safety instructions

SAFETY

When using industrial equipment and plants, one must be aware of the fact that drive mechanisms (rotary motion), high voltage components, as well as parts subject to high temperatures may cause serious damages to persons and things.
Who is in charge of plant safety must be on the look-out that
- An uncorrect use or handling is avoided.
- Safety devices are neither removed nor tampered.
- The machine is regularly serviced.
- Only are original spare parts to be used especially as far as those components with safety functions are concerned (ex.: protection microswitches, thermostats).

To achieve the above, the following is necessary:
- At working place an instruction manual relevant to the machine should be available.
- Such documentation must be carefully read and regulations must consequently be followed.
- Only must adequately skilled personnel be assigned to electrical equipment.

QUALIFICATION OF THE STAFF

Staff attached to the machine can be distinguished according to training and responsibility as follows:

OPERATOR
- A person who has not necessarily a high technical knowledge, just trained for ordinary operation of the machine, such as: startup, stop, filling, basic maintenance (cleanout, simple blocking, instrumentation checkings, etc.).

SKILLED ENGINEER
- A person enganged on more complicated operations of installation, maintenance, repairs, etc.

IMPORTANT!
One must be on the look-out that the staff does not carry out any operation outside its own sphere of konwledge and responsibility.

NOTE:
According to the standard at present in force, a SKILLED ENGINEER is who, thanks to
- *training, experience and education,*
- *knowledge of rules, prescriptions and interventions on accident prevention,*
- *knowledge of machine operating conditions,*

is able to realize and avoid any danger and has also been allowed by the person in charge of plant safety to carry out all kinds of interventions.

CONVENTIONAL SYMBOLS

ATTENTION: ELECTRIC SHOCK DANGER
The staff involved is warned that the inobsevance of safety rules in carrying out the operation described may cause an electric shock.

ATTENTION: GENERAL DANGER
The staff involved is warned that the operation described may do harm if not carried out in the observarnce of safety rules.

NOTE
It points out significant information for the staff involved.

WARNINGS
The staff involved is warned that the inobservance of information may cause a loss of data and damages to the machine.

MACHINE OPERATOR
It deals with an unskilled person , who has no specific competences and can only carry out easy functions, such as the machine operation by means of controls available on push-button panel , and filling and drain of products used during production.

MAINTENANCE ENGINEER
He is a skilled engineer for operation of the machine under regular conditions; he is able to carry out interventions on mechanical parts and all regulations, as well as maintenance and repairs. He is qualified for interventions on electrical and freezing plants.

PROMAG ENGINEER
It deals with a skilled engineer the manufacturer puts at clients' disposal for complicated interventions und particular conditions or anyhow in accordance with agreements taken with the machine's user.

PROTECTIONS
This symbol placed by description side means that the operator must use personal protections against an implicit risk of accident.

WARNING

When installing the machine, insert a differential magnetothermal protection switch on all poles of the line, adequately sized to the absorption power shown on machine data plate and with contact opening of 3 mm at least.

- Never put your hands into the machine, alike during production and cleaning operations. Before carrying out any maintenance operation, make sure that the machine is in "**STOP**" position and main switch has been cut out.
- It is forbidden to wash the machine by means of a bolt of water under pressure.
- It is forbidden to remove panels in order to reach the machine inside before disconnecting the machine.
- **PROMAG** is not responsible for any accident that might happen during operation, cleaning and/or servicing of its units, if this warning has not been fully complied with.

RECEIVING, MOVING, UNPACKING

SECTION INDEX

PROMAG

1.1 RECEPTION

- Before unpacking the machine, check that packing shows no external damages due to collisions during transportation.
- An external damage could mean the machine itself is damaged: in this case, immediately apply to insurance company and leave everything as it was on reception.

1.1.1 LIFTING PACKED MACHINES

To lift the packing, insert lift forks into the space between pallet feet, so as to balance the machine weight and consequently packing barycenter.

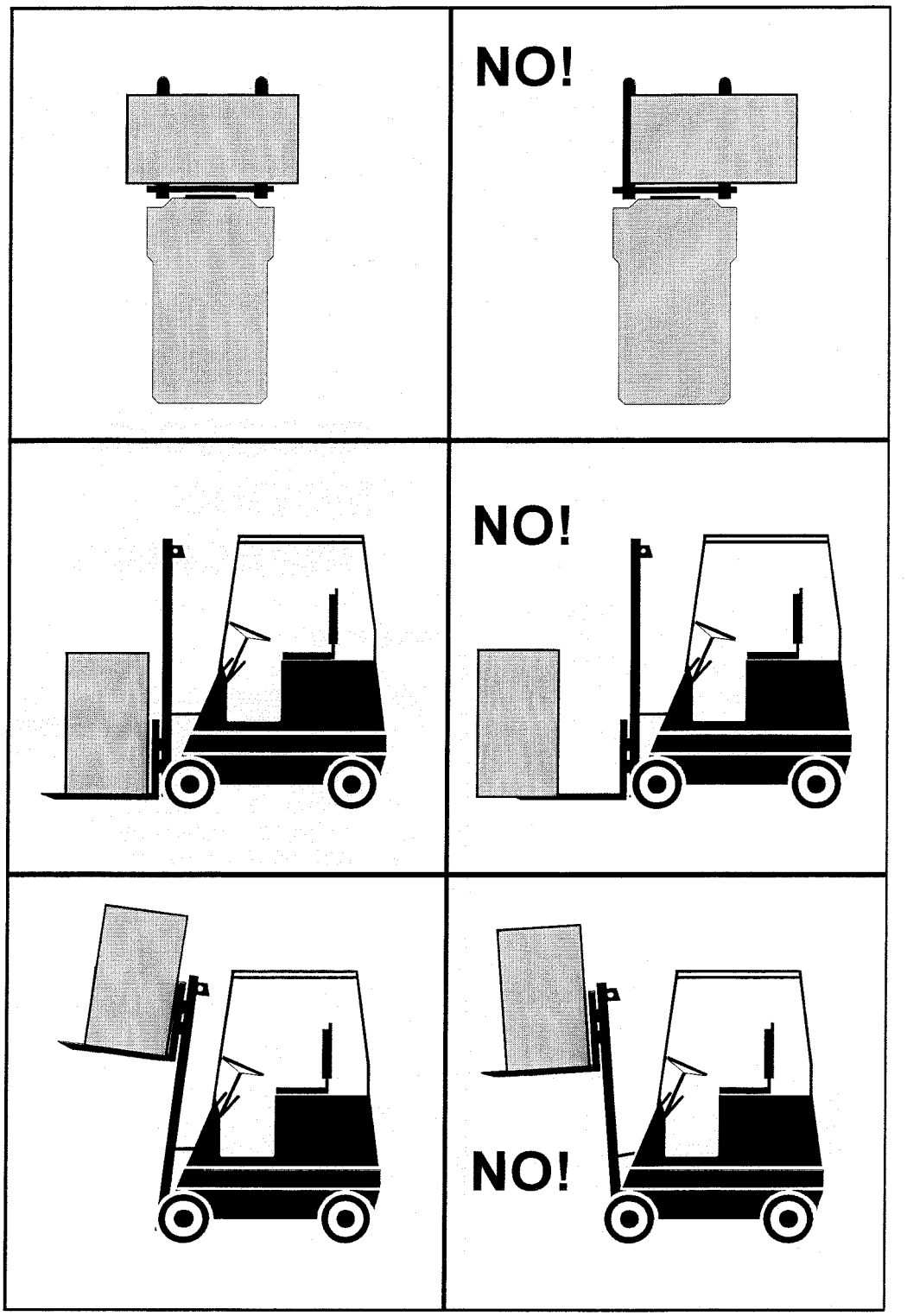

1.1.2 FORBIDDEN MATERIAL HANDLING EQUIPMENT

Material handling equipment not in compliance with following safety characteristics must never be used:

- Lifting capacity lower than machine weight
- Unsuitable construction features of the lift (ex.: too short forks)
- Construction features altered by use
- Unconforming ropes and cables
- Worn ropes or cables.

1.2 UNPACKING

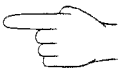

There are two types of packing: wooden type or in corrugated board.

Walls of a wooden packing are nailed and the machine is fastened by means of stay bolts connecting machine frame bottom to packing wooden base.
A wooden packing can be opened by means of proper tools; it is recommended to protect exposed parts, such as hands with gloves, against wood splinters.

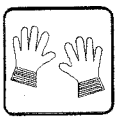

- Remove nails starting from the upper part until the machine still fastened to the pallet (board) is left uncovered.
- Remove protection film wrapping the machine.
- Check that the machine has not been damaged during transportation.

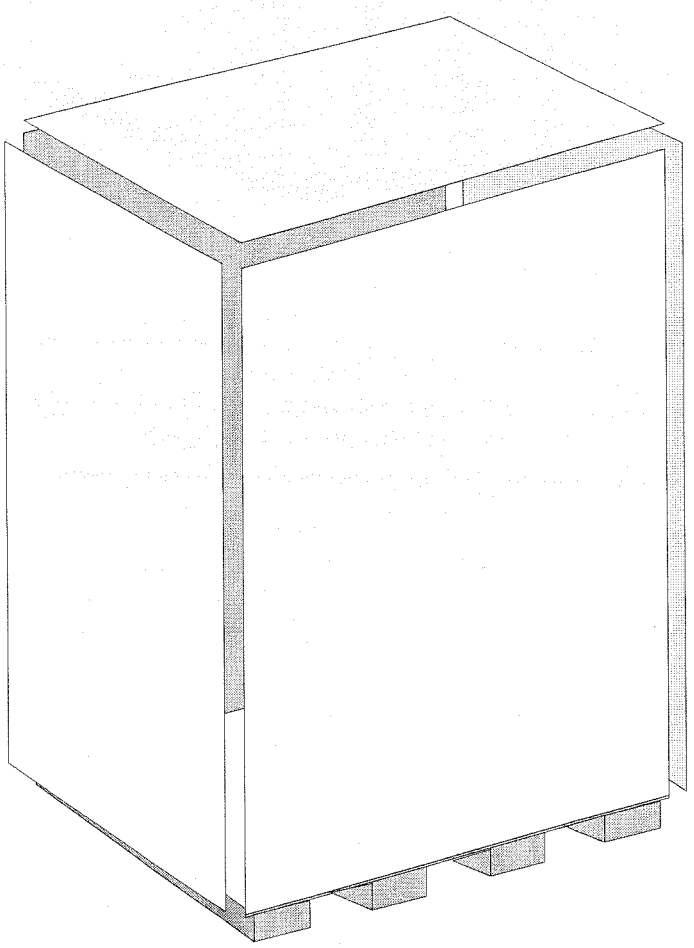

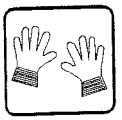

Board packing is externally closed by three steel straps.
The machine is secured through other straps at the inside.
This packing can be opened with snips.

Act with utmost care, as you may hurt yourselves when cutting the straps, if they are not strongly held during this operation.

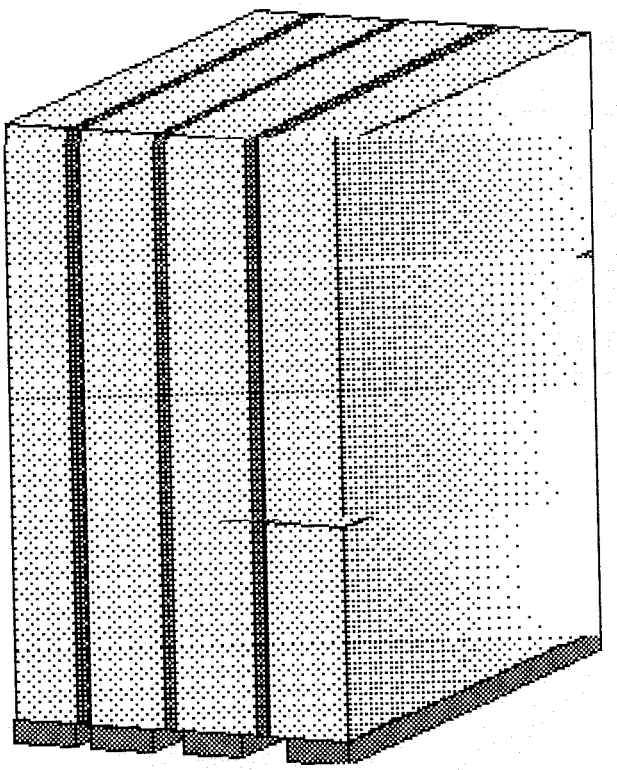

ATTENTION!

Inside the machine you will find an instructions handbook; it is necessary to carefully read it before operating the machine.

1.3 STORING THE MACHINE

The machine must be stored in a dry and dump-free place. Before storing the machine, wrap it in a cloth in order to protect it agains dust and else.

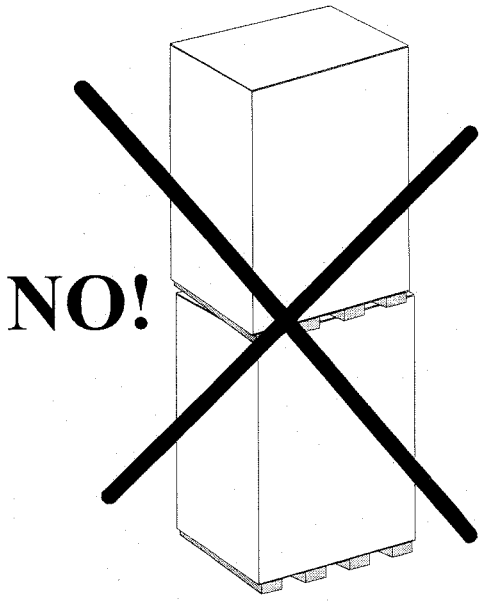

IMPORTANT:
When storing a packed machine, never place a crate on another.

1.4 DISPOSAL OF PACKING STUFFS

When opening the packing crate, divide packing stuffs per type and get rid of them according to laws in force in the machine installation country.

GENERAL INFORMATION

SECTION INDEX

PROMAG

2.1 GENERAL INFORMATION

2.1.1 MANUFACTURER'S IDENTIFICATION DATA

The machine has a data plate carrying manufactuer's data, machine type and identification number given when it is manufactured.

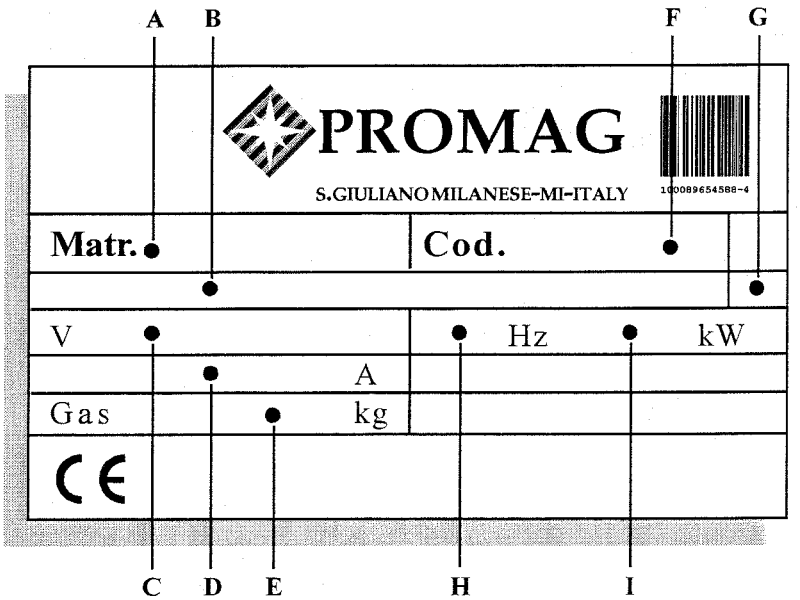

A= Serial number

B= Machine type

C= Voltage

D= Fuse Current

E= Gas type and weight

F= Machine code

G= Condensation
A=Air
W=Water

H=Frequency

I= Power input

2.1.2 CLIENT/USER'S IDENTIFICATION DATA

CLIENT: .....

ADDRESS: .....

TELEPHONE: .....

Machine serial number: .....
Machine delivered on: .....
Instr. handbook delivered on: .....

2.1.3 INFORMATION ABOUT SERVICE

All operations of routine maintenance are described in section "Maintenance" of this handbook; any further operation requiring radical interventions on the machine must be agreed with the manufacturer, who will also examine the possibility of a direct action on the spot.

2.1.4 INFORMATION TO THE USER

- The manufacturer of the machine here described is at user's disposal for any explanation and information about the machine operation.
- In case of need, the interlocutor is the distributor being present in user's country, or the manufacturer if no distributor is in that market.
- Manufacturer's service department is at clients' disposal for any information about operation, and requests of spare parts and service.
- The manufacturer reserves the right to carry out all machine changes deemed as opportune without previous notice.
- Descriptions as well as pictures contained in this handbook are not binding.
- Reproduction rights are reserved to **PROMAG**.

2.2 INFORMATION ABOUT THE MACHINE

2.2.1 GENERAL INFORMATION

The machines **STARCOMPACT** are ice cream mix ageing vats.
An electronic microprocessor steadily controls the working cycle.
An alphanumerical display gives messages, as well as audible and visual signals on each cycle stage.
Aging is an important mix working phase because thickening, emulsifying and stabilizing agents can bind together with fat fractions.
Time taken to such binding processes is a minimum of 4 hours to a maximum of 12 hours.

PROMAG recommends to always use high quality ingredients for the preparation of confectionery products, in order to satisfy your customers, even the hardest-to-please ones.
Any saving made to the prejudice of quality will surely turn into a loss much bigger than the saving itself.
Bearing in mind the above statements, please take heed of the following suggestions:

- Choose high quality natural ingredients or buy semifinished products from reliable companies.
- Closely follow instructions given by your supplier .
- Do not alter your supplier's recipes, by adding, for instance, water or sugar.
- Taste your products before serving and start selling only if entirely satisfactory.
- Make sure your staff always keeps the machine clean.
- Have your machine serviced always by companies authorized by **PROMAG**.

2.2.2 GROUPS LOCATION

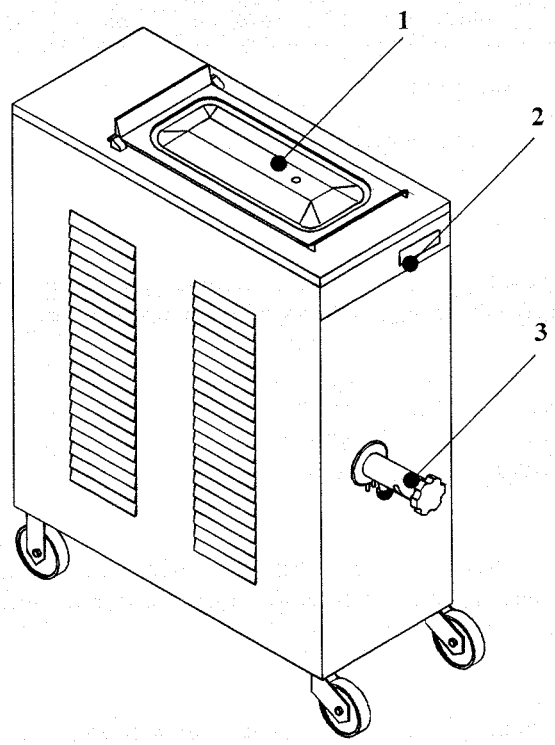

Caption:

Ref.1 Tank cover
Ref.2 Control panel
Ref.3 Dispensing spigot

2.2.3 MACHINE LAYOUT

NOTE:
Dimensions herebelow reported may change depending on type of condensation.

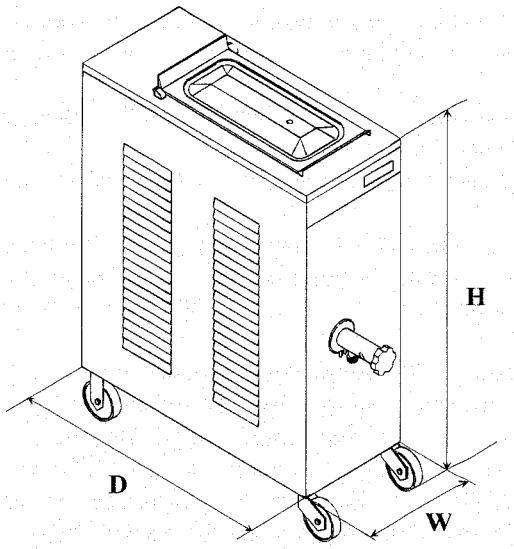

MODEL	Dimensions		
	Width mm. (W)	Depth mm. (D)	Height mm. (H)
STAR COMPACT 60	389	835	1065
STAR COMPACT 120	640	835	1065

2.2.4 TECHNICAL FEATURES

MODEL	Tank capacity	Tank min. level	Tank max. level	Electric power*			Productio per cycle	Condenser	Net/gross weight
	litres	litres	litres	volt	Hz	ph	litres		kg
STAR COMPACT 60	60	20	60	220	50	1	60	Air	100/130
STAR COMPACT 120	120	40	120	220	50	1	120	Air	145/175

* Other voltages and cycles are available.

Performances features are at a room temperature of 25°C

2.3 INTENDED USE

STARCOMPACT models must only be used in conformity with descriptions given in paragraph 2.2.1 "General information"within operational ranges herebelow reported:

- Voltage: ..... ±10%
- Min. air temperature: ..... 10°C
- Max. air temperature: ..... 43°C
- Max air relative humidity: 85%

This machine has been designed for its use in places which are not subject to explosion-proof standards; its use is thus bound to conforming places and normal atmosphere.

2.4 NOISE

Sound levels, ambient background noises included, are indicated.
Machine noise level is below 70dB (A).

INSTALLATION

SECTION INDEX

PROMAG

3.1 ROOM NECESSARY TO THE MACHINE USE

The machine must be installed in such a way that air can freely circulate all around.
Room for the approach to the machine must be left free in order to enable the operator to act without costraint and also to immediately leave the working area, if need be.
The minimum approach room to the working area should be at least 150 cm.

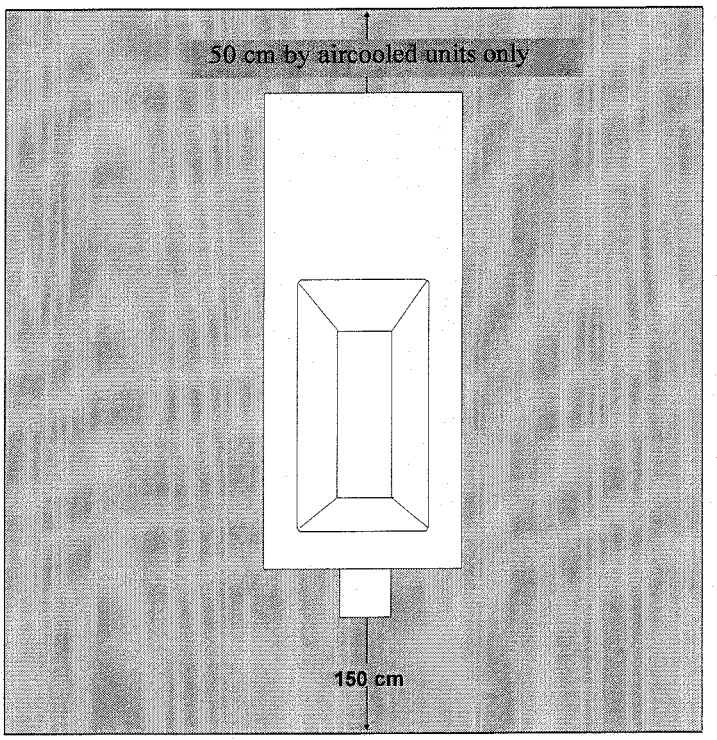

3.1.1 MACHINE LOCATION

For an easy movement, the machine has been provided with castors having mechanical locks which, once engaged, lock the castors and so keep the machine standstill.

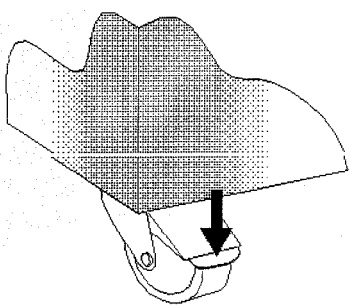

3.2 MACHINES WITH AIRCOOLED CONDENSER

Machines with aircooled condenser must be installed no closer than 50 cm to any wall in order to allow free air circulation around the condenser.

CAUTION!
An insufficient air circulation of the machine affects its operation and output capacity.

3.3 WATERE CONNECTION FOR WASH

The machines have been provided with a separate inlet water pipe, which is placed beneath the machine lower surface and must be used for washing water connection. Only has drinking water to be connected to this pipe which is marked as per plate shown herebelow.

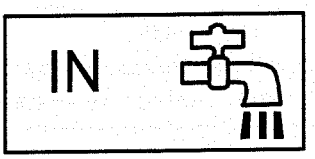

To make cleanout easy, we recommend to connect warm water used in your laboratory directly to wash pipe, installing a shut-off valve.

3.4 ELECTRICAL CONNECTION

Before connecting the machine to the mains, check that the voltage is the same as the one stated on its plate. Between the machine and the mains, insert a magnetothermic differential sectioning switch properly dimensioned to the input required, and having a contact opening of 3 mm, at least.
The machines are delivered complete with a power cable (a 5-wire cable by threephased machines and a 3-wire cable by siglephased machines); blue wire must be connected to the neutral one.

IMPORTANT
Yellow/green ground wire must be connected to a good ground plate.

3.4.1 REPLACING POWER SUPPLY CABLE

Should the main cable of the machine be damaged, it needs to be replaced immediately through a cable with similar features.
Replacement shall be carried out by skilled technicians, only.

CAUTION!
For a less wear of the shaft, always keep the yellow cover (pos. 236) inserted.

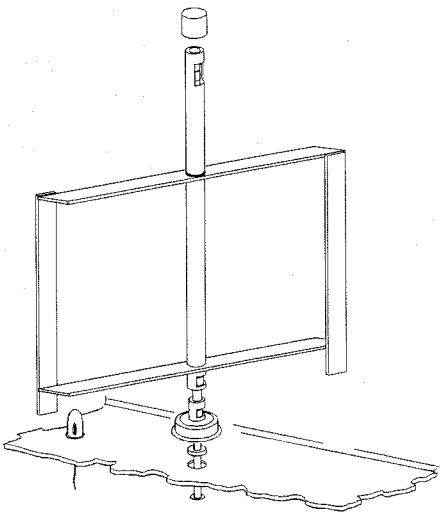

3.5 CLEANOUT

Eliminate dust from machine, as well as the protective material the machine was strewed with. Use just water and, if need be, add a soap-based mild detergent with a soft cloth.

CAUTION!
Do not use either solvents, or alcohol and detergents that may damage the machine parts and contaminate parts coming into contact with product.

3.6 REFILLING

Motor installed in the machine is of the type with lubrication for life; no action of checking/ replacing or topping up is necessary.
Gas filling necessary to the cooling system is carried out at **PROMAG** works during machine postproduction testing; new machines do not require topping-up or refilling.
If a gas addition happens to be made, this must be carried out by skilled technicans, only, who can find out trouble origin.

3.7 MACHINE TESTING

A postproduction test of the machine is carried out at **PROMAG** premises; operation and output functionality of the machine are thoroughly tested.
Machine test at end user's must be carried out by skilled technicians or by one of **PROMAG** engineers.
After the machine positioning and correct connections, also carry out all operations necessary to functional check and test of the machine.

INSTRUCTIONS FOR USE

SECTION INDEX

PROMAG

4.1 MACHINE SAFETY WARNINGS

When using industrial equipment and plants, one must be aware of the fact that drive mechanisms (rotary motion), high voltage components, as well as parts subject to high temperatures may cause serious damages to persons and things.
Who is in charge of plant safety must be on the look-out that

- an uncorrect use or handling is avoided
- Safety devices are neither removed nor tampered
- The machine is regularly serviced
- Only are original spare parts to be used especially as far as those components with safety functions are concerned (ex.: protection microswitches, thermal relays).

To achieve the above, the following is necessary:

- At working place an instruction manual relevant to the machine should be available.
- Such documentation must be carefully read and regulations must consequently be followed.
- Only must adequately skilled personnel be assigned to electrical equipment.

4.2 MACHINE CONFIGURATION

The machine consists of a transmission of movement for beater assembly and a dry cooling system with aircooled condenser.
The product is prepared by pouring the mix into the tank and starting the aging cycle, while referring to minimum and maximum quantities mentioned in paragraph 2.2.4 "Technical features".

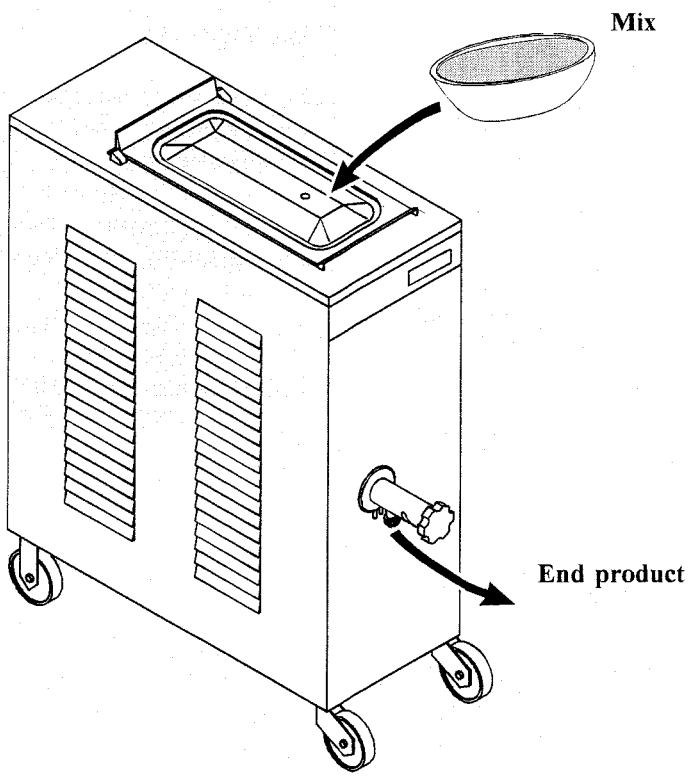

4.3 CONTROLS

4.3.1 CONTROL PANEL

For a correct use of push-buttons on the electronic keyboard, press on the symbol or anyway in the middle of the push-button itself.

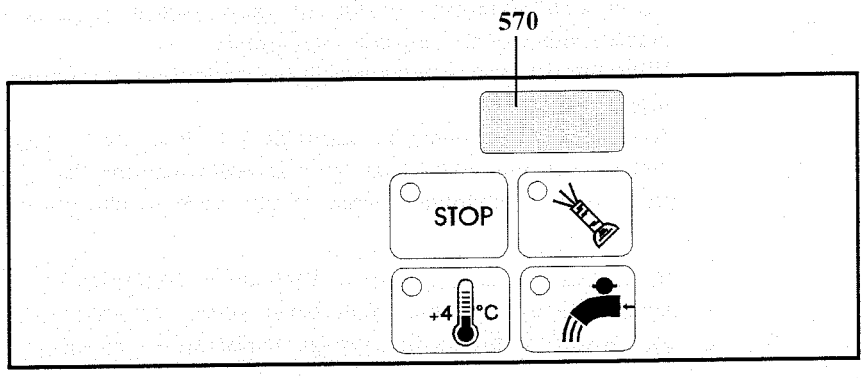

4.3.2 COMMON FUNCTIONS

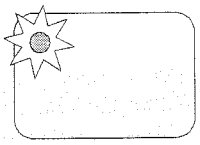

Function insert light indicator
When a light indicator lights on, it indicates the insert of the function corresponding with the symbol by side of light indicator itself.

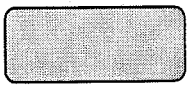

Display (pos. 570)
This digital display gives a series of messages when machine is turned on and during its use. It normally indicates the real and current temperature of the mix inside the tank.

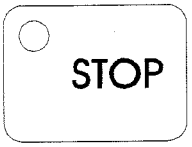

STOP/RESET key
When STOP function is inserted, the relevant red light is on.
The STOP key stops any other function and it is the mode the machine sets at when you turn it on.

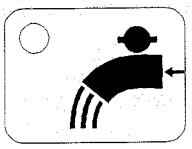

TAP WATER (for cleaning after dispensing the mix)
Tap water inlet is enabled from any function.
To deliver water, it is enough to press TAP WATER just once; inlet will automatically end after a time that can be set between 1/10 second and 9 seconds.
For time programming, see paragraph COOLING.

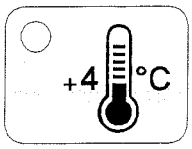

COOLING

The function insert is indicated by lighting on of its warning light and cooling keeps on running up to reaching a preset storage temperature (it can be programmed 2 to 6°C).
During cooling process, beater and compressor are connected and the display indicates the real mix temperature.
If the temperature remains within the desired range, compressor and beater are cut out.
As soon as the temperature raises by 2°C as to the temperature set, compressor and beater start again in order to bring the temperature back to its programmed value. If you wish to change the storage temperature, it is necessary to keep down COOLING key about 3 seconds while this function is active; relevant led blinks and the display indicates the storage temperature set (usually +4°C).

To change storage temperature press TAP WATER until the display will show the new value, which can be changed +2°C to +6°C.

Pressing COOLING for the second time, while still blinking, you program tap water inlet time; this will be indicated by blinking of relevant led; such time can be modified within a minimum of 1/10 second and a maximum of 9 seconds by pressing TAP WATER . repeatedly.
If no key is pressed for about 3 seconds, cooling led stops blinking and remains on permanently, so indicating the return to the programmed original operation.
Pressing STOP is another way to leave programming mode.

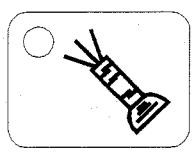

WASH WATER

The function insert is indicated by lighting on of relevant warning light.
This function can be activated with machine at STOP, by pressing WATER INLET key or while TAP WATER inlet is still active.
The latter is howeer deactivated on pressing WASH WATER key.
During water delivery, the display shows the real temperature of water inside the tank.

Tank water inlet ends by pressing STOP key .

IMPORTANT: The machine is provided with an automatic water block device and after 3 minutes it stops water inlet and returns to STOP position.

4.4 PRELIMINARY OPERATIONS, WASH AND STERILIZATION

Before starting the machine for the first time, it is necessary to clean its components thoroughly and then also sterilize all parts in contatct with the product.

IMPORTANT
Cleanout and sterilization must be carried out at the end of every working day, as a habit and with utmost care, in order to guarantee high quality and the observance of all healthy rules.

4.4.1CLEANOUT

- With machine not operating and STOP light STOP on, make sure that the mix dispensing tap is closed.
- Let water necessary to wash in, by pressing SHOWER key .
- Leave water inside the tank.
- Press "STOP" STOP..
- Drain all water from the tank through the dispensing tap.
- Open the tank cover. Remove the beater (see disassembling instructions Sect. 6) by slightly pulling it upwards and minding not to damage it.
- Wash all parts in water.
- Also wash inside tank walls and tank cover.
- Disassemble the tap (see disassembling instructions Section 6), thoroughly wash and remount.
- Reassemble all disassembled parts after lubricating ORs with a film of edible fat, such as GELILUBE.

4.4.2 STERILIZATON

With machine not operating, after removing the beater and the cover, and checking that the dispensing spigot is closed, fill the tank with a NON CORROSIVE sterilizing solution.

Drain the sterilizing solution through the dispensing tap.

CAUTION

Before using the machine again, thoroughly rinse with just water, in order to remove residues of sterilizing solution.

CAUTION

Do not touch sterilized parts with hands, napkins, or else.

4.4.3 HYGIENE

Mildew and bacteria grow rapidly in mix fat contents. To eliminate them, it is necessary to wash and clean all parts in contact with the mix, as described above.
Stainless steel and plastic materials, as well as rubber used in the construction of these parts, and also their particular shapes and design make cleanout easy, but cannot prevent proliferation of mildew and bacteria if not properly cleaned.

4.5 MACHINE STARTING

After washing, sterilizing and thoroughly rinsing the machine right before its use, as per our previous descriptions, pour mix into the tank according to the desired quantity but also respecting minimum and maximum quantities reported in the table (sect. 2, page 4); the tank is provided with an internal graduation which indicates the approximate mix contents.

Before filling the tank with mix, make sure that the dispensing tap is perfectly closed.

Note: *A non perfectly closed tank cover will not allow the machine operation.*

You can start the machine, now.

The machine working cycle starts by selecting STOP 

position.

Press COOLING key 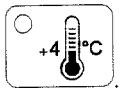

.

4.5.1 USE OF MIX DISPENSING TAP

In order to dispense the mix, it is necessary to turn the white tap knob anticlockwise, all to the leftside.

Closing
To close the dispensing tap, turn the knob all to the rightside, to closing position.

SAFETY DEVICES

SECTION INDEX

PROMAG

5.1 MACHINE SAFETY DEVICES

STARCOMPACT are provided with a series of safety devices for the sake of machine and operator's safety.

CAUTION!
PROMAG is not responsible for any damage to people and/or things caused by changes on machine or tamperings on devices provided for the operator's and machine safety

The tripping of each safety device comes up to an alarm on cotrol panel display.
Please find herebelow a list of above mentioned ALARMS:

Pt **TANK COVER OPEN**
Whenever the tank cover is opened while the machine is running, the machine stops immediately and will only restart after closing the tank cover (automatic reset 2 seconds after closing).

PA **"TE1" TEMPERATURE SENSOR**
Check the temperature sensor which must be interrupted anyway on the cable of the sensor itself (wire broken or element in sensor bulb disconnected) or under short circuit (on connector or on the element of sensor bulb).
This alarm also takes place when the sensor is disconnected from the terminal board in the wiring box.
Connect the wire or replace the sensor, if need be.

Pr **PRESSURE SWITCH ALARM**
When this alarm occurs, the machine stops immediately; therefore make sure that nothing is obstructing water flow to the condenser (by watercooled machines) or that the cooling fan works properly (by aircooled machines).
Anyway, call an expert engineer.

CLEANING, DISASSEMBLING AND REASSEMBLING PARTS IN CONTACT WITH PRODUCT

SECTION INDEX

PROMAG

IMPORTANT

Cleanout and sterilization must be carried out at the end of every working day as a habit and with utmost care in order to guarantee quality of production in the respect of all hygienic rules.

6.1 PERIODICAL CLEANOUT

Set the machine at STOP 

.

- Make sure that the mix tap is closed, let then water in ,according to quantity necessary to wash , by pressing SHOWER  .
- Press STOP 

.
- Drain all water from the tank through the product dispensing tap .
- Disassemble the machine parts, as described in previous paragraphs.
- Wash all parts in water.
- Reassemble all parts while lubricating all ORs with a film of edible fat, such as GELILUBE.

6.2 PARTS DISASSEMBLY

6.2.1 DISASSEMBLING THE PRODUCT DISPENSING TAP

- Disassemble the tap knob pos. 450, by turning it anticlockwise.
- Disassemble then all other parts of the tap.
- Wash all parts in water using the special brush you can find in the accessories kit.
- Reassemble, keeping in mind to lubricate all ORs previously removed with the edible fat provided.

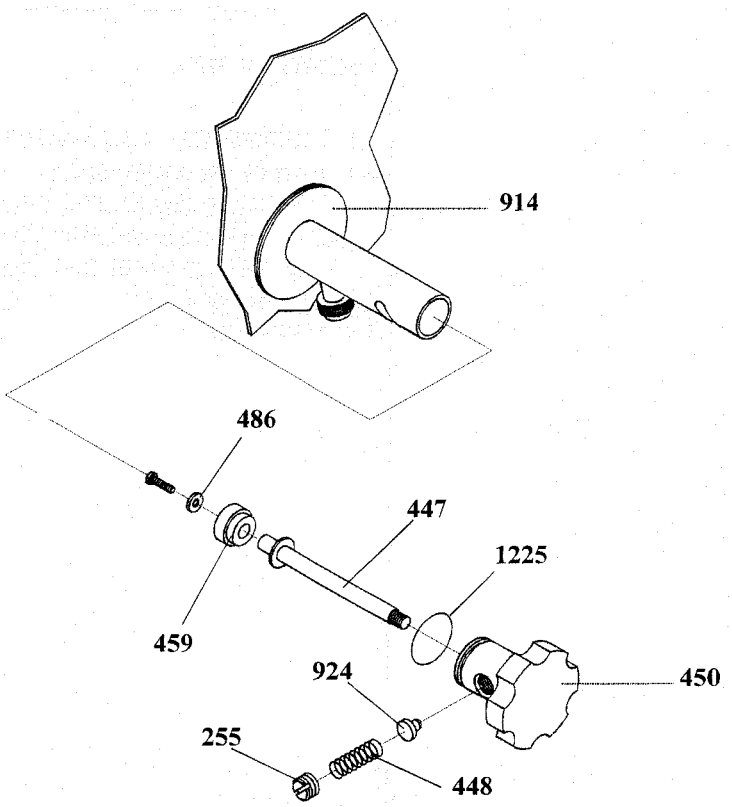

DISASSEMBLING THE TANK COVER

NOTE:
The machine is provided with a safety device on its cover; every time you lift the cover while the machine is running, the machine will stop.

- Tank cover pos. 250 is completely removable.
- Place the cover vertically; deeply push on cover until its pin comes out.
- Withdraw the tank cover by lifting it vertically and pushing forward on the fixed hinges 253-254.

NOTE:
One can also remove just the cover by taking it out from fastening hinges which will remain fastened to the machine.

Wash the whole thoroughly and reassemble.

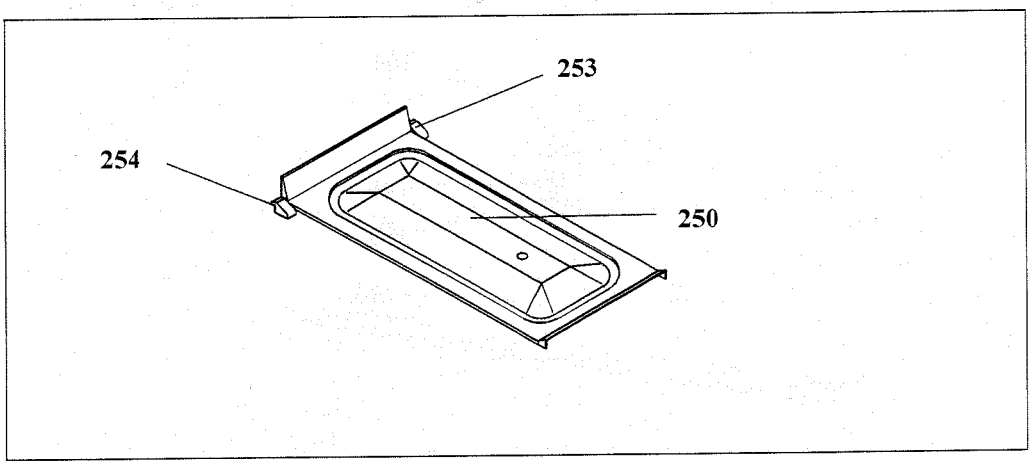

6.2.3 DISASSEMBLING THE BEATER

- Withdraw the beater vertically by pulling it slightly upwards and minding not to damage its blades;
- Remove plug pos.154;

WARNING

Act and handle with utmost care, as a fall to the ground might damage the beater.

- Wash the beater parts;
- Reassemble all parts previsously disassembled, following the reverse procedure.

CAUTION!

The beater is correctly reassembled when the spline on the beater shaft pos. 313 perfectly agrees with the one of drive shaft pos.161.

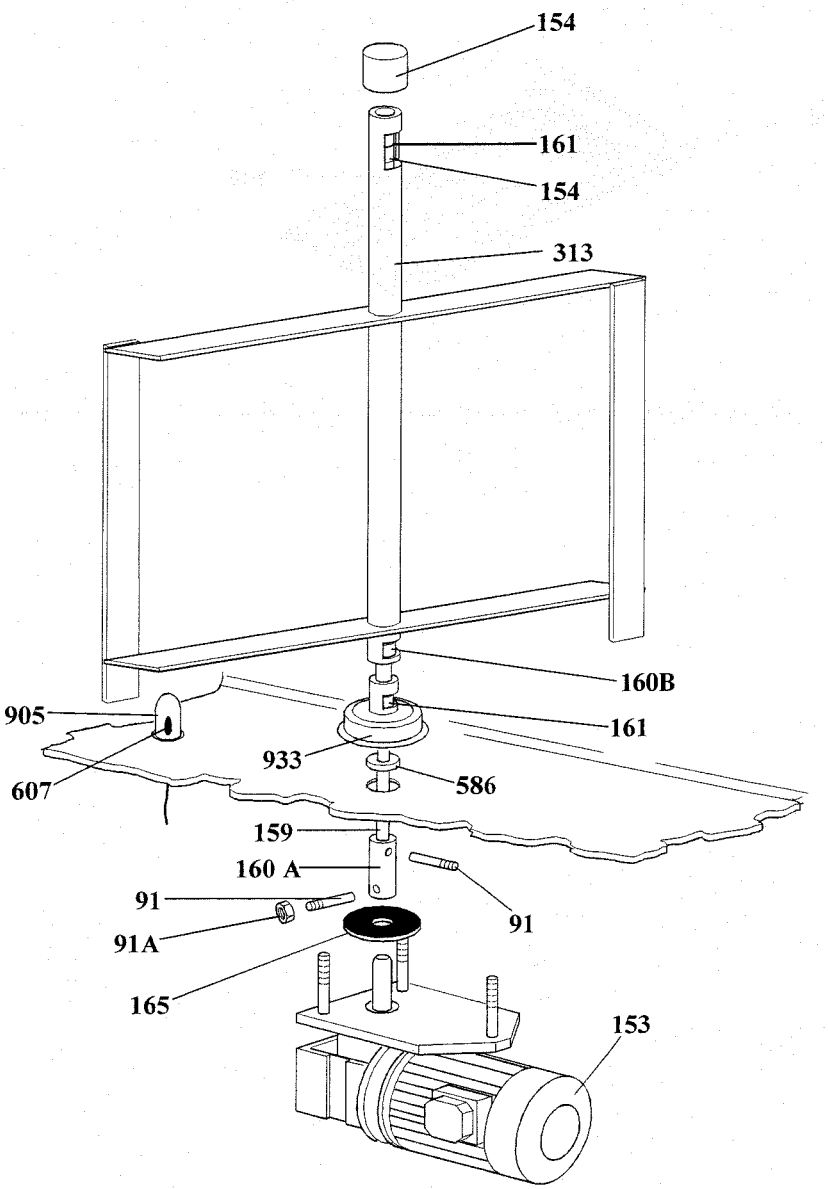

6.3 STERILIZATION

With machine not operating, after reassembling beater and cover and checking that tap pos. 505 is closed, fill the tank with a NON CORROSIVE sterilizing solution.

CAUTION

Too a long running in "BEATING" position with empty tank or just filled with water and sterilizing solution, brings about a quick wear of the beater.

Drain all sterilizing solution by opening the dispensing tap.

CAUTION

Before starting again with production, rinse thoroughly with just water, in order to remove any residue of sterilizing solution.

CAUTION

Do not touch the sterililzed parts with hands, napkins, or else.

6.4 HYGIENE

Mix fat contents are ideal fields for proliferation of mildew and bacteria.
To eliminate them, parts in contact with mixes and creams must thoroughly be washed and cleaned.
Stainless steel materials as well as plastic and rubber ones used for the construction of these parts and their particular design make cleaning easy, but cannot prevent the growth of mildew and bacteria if not properly cleaned.

MAINTENANCE

SECTION INDEX

PROMAG

7.1 SERVICING TYPOLOGY

ATTENTION

Any servicing operation requiring the opening of machine panels must be carried out with machine set at stop and disconnected from main switch!

Cleaning and lubricating moving parts is forbidden!

Repairs of electrical and freezing plants must be carried out by skilled engineers!

Operations necessary to a proper machine running are such that most of servicing is completed during production cycle.
Servicing operations, such as cleaning of parts in contact with the product, replacing of stuffing box, disassembling of beater assembly are to be carried out at the end of a working day, so as to speed up serving operations required.

Herebelow you can find a list of routine servicing operations:

- **Cleanout of beater assembly**
  At the end of a working day
- **Cleanout of panels**
  To be carried out daily with neutral soap , seeing to it that no cleansing solution reaches the beater assembly at its inside.
- **Cleanout and sterilization**
  At the end of every working day, according to procedures described in section 6.

WARNING

Never use abrasive sponges to clean machine and its parts, as you might scratch their surfaces.

7.2 CLEANING THE CONDENSER

Clean the air condenser, periodically, in order to remove dust and impurities that may hinder air circulation.
Use a brush with long bristles or a bolt of compressed air.

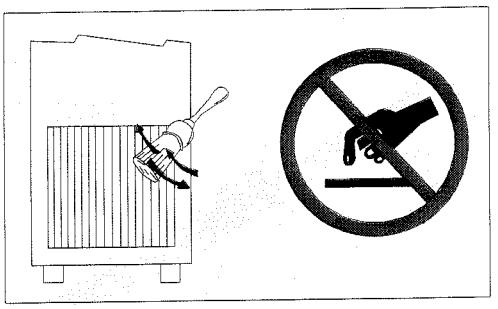

ATTENTION!
When using compressed air, put on personal protections in order to avoid accidents; put on protective glasses!

CAUTION
Never use sharp metal objects to clean the condenser; good working of the freezing plant mostly depends on condenser cleanout.

7.3 ORDERING SPARE PARTS

In the event of breaking or wear of one or more parts, request the new ones directly to the local Distributor, who will provide repair and replacement through original **PROMAG** spare parts.

PROMAG

7.4 SPARE PARTS EQUIPMENT

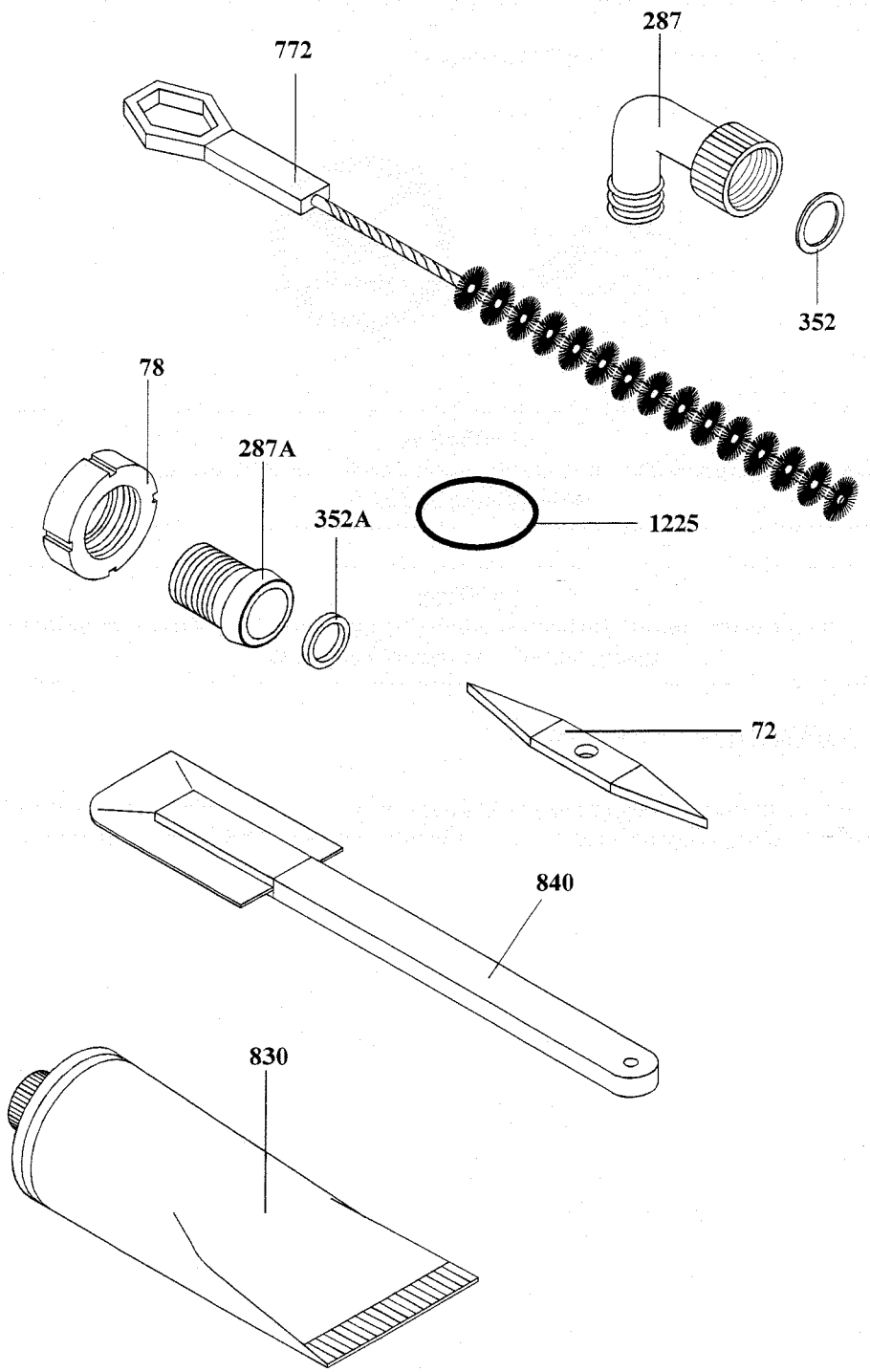

Q.ty	Description	Position Nr
Nr 1	OR extractor	72
Nr 1	ring nut 121.D15/000.4	78
Nr 3	Rubber pipe fitting 3/4 FXD.16	287
Nr 1	Rubber pipe fitting 144.D15/000.4	287A
Nr3	Pipe fitting gasket	352
Nr 1	Gasket 131.D15/000.S	352A
Nr 1	Brush D 30x640	772
Nr 1	Gelilube tube	830
Nr 1	Cleaning brush	840
Nr 2	OR	1225

TROUBLESHOOT GUIDE

SECTION INDEX

PROMAG

8.1 TROUBLESHOOT GUIDE

Trouble	Possible cause	Advised cures
Machine does not turn on	Supply mains	Check the supply mains
Keyboard does not turn on	Connection cable	Check connection, connector keyboard/card and cable
	Fuse on secondary circuit of transformer is burnt	Replace the fuse (F2A)
	8-pin connector is disconnected	Connect 8-pin connector
	CPU	Replace CPU
Keyboard does not accept a function button	Keyboard	Replace the keyboard Call after-sale service
Keyboard is completely off and no function starts when pressing its keys.	Eprom not installed or installed from wrong side	Install Eprom correctly
	Keyboard and/or CPU	Replace keyboard and/or CPU
Icing inside the tank	Product does not exchange properly	Check sensors setting
Heating does not start (resistances not activated)	Faulty sensor	Using pasteurization key, check, from beating, temperatures of TEC and TEV sensors. Replace the sensor not to scale
	Resistance disconnected	With machine off, check the resistance in Ohm at the terminals of heating elements. If there is no resistance in ohm, it is necessary to replace the spigot body.

PROMAG
LE MACCHINE PER IL GELATO

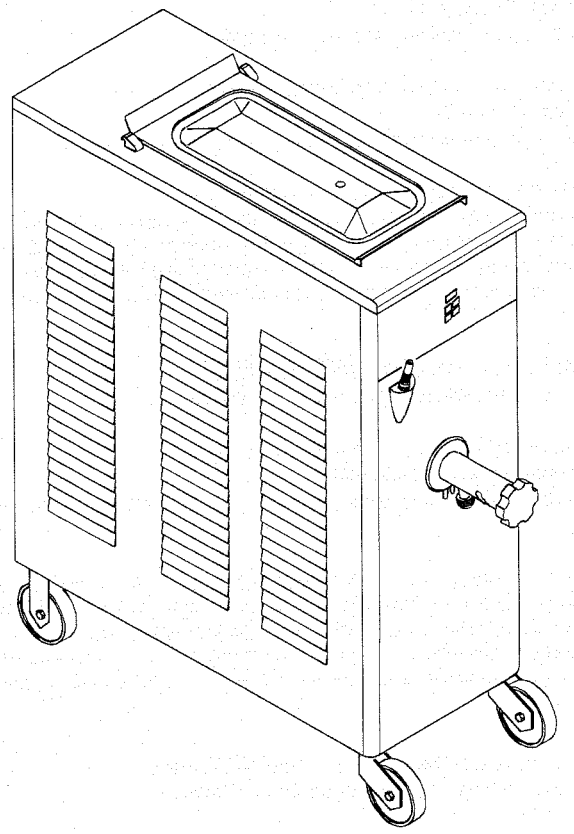

STARCOMPACT 60

LISTA DI RICAMBI
LIST OF SPARE PARTS
LISTE DES PIECES DE RECHANGE
ERSATZETEIL - LISTE
LISTA DE REPUESTOS

I

Come consultare il MANUALE PARTI DI RICAMBIO:

Il **Manuale Parti di Ricambio** è costituito da**Tavole** grafiche e da **Tabelle**.

Tavole grafiche:

- Le tavole riportano il disegno esploso dei gruppi principali della macchina.
- La suddivisione delle tavole è identificata nella TAV.0.
- Ogni particolare di ricambio è identificato da un **numero di posizione, i numeri di posizione posti in un riquadro identificano i particolari di ricambio consigliati.**

Tabelle:

- Le tabelle riportano i **Numeri di Posizione**, la **Descrizione** ed il **Codice** del particolare.
- Nel caso in cui lo stesso numero di posizione sia riportato più volte, ma associato a codici differenti, è necessario, all'atto dell'ordine, specificare la matricola della macchina in possesso del cliente, al fine di identificare il codice del particolare da fornire.

Per ordinare uno o più particolari di ricambio identificare sulla TAV.0 la tavola in cui è rappresentato il gruppo macchina in cui è presente il particolare, identificare quindi sulla tavola il particolare ed il relativo numero di posizione, quindi ricercare sulle tabelle il numero di posizione ed il corrispondente codice.

GB

How o consult the SPARE PARTS MANUAL:

The **Spare Parts Manual** is made up of **Drawing Plates** and **Tables.**

Drawing Plates:

- The plates contain the exploded views of the main units comprising the machine.
- The subdivision of the plates is liste on "TAV.0".
- Each spare parts item is identified by a position number, position numbers found in a box indicate the spare parts items recommended.

Tables:

- The tables list the **Position numbers**, **Descriptions** and the **Codes** for items.
- When the same position number appears more than once, but is also associated with different codes, specify the serial number of the customer's machine when ordering for the purpose of identifying the code for the item to be supplied.

To order one or more spare part items, identify the plate on "TAV.0" representing the machine unit on which the item is located. Locate the item on the plate and the corresponding position number as well. Then use the position number to locate the corresponding code on the table.

F

Comment consulter le LIVRET DES PIÈCES DÉTACHÉES:

Le livret des Pièces Détachées se compose de **Planches** et de **Tableaux.**

Planches:

- Les planches illustrent la vue éclatée des groupes principaux de la machine.
- La "TAV.0" illustre la subdivision des différentes planches.
- Chaque pièce détachée est identifiée par un numéro de repère; les numéros de repère en encadré identifient les pièces détachées consillées.

Tableaux:

- Les tableaux indiquent les Numéros de repère, la Désignation des pièces et les Codes des pièces en question.
- Si la même numéro de repère indiqué plusieurs fois mais qu'il est associé à des codes différents, lors de la commande il faut préciser le numéro de série de la machine; cela permettra d'identifier le code de la pièce à fournir.

Pour commander une ou plusieurs pièces détachées, repérer sur la "TAV.0" la planche représentant le groupe dont fait partie le pièce, ensuite identifier la pièce en question sur la planche ainsi que son numéro de repère, puis rechercher sur les tableaux le numéro de repère et le code y relatif.

D

Hinweise für die Konsultation des ERSATZTEILHANDBUCHES

Das Ersatzteilhandbuch besteht aus graphischen **Abbildungen** und **Tabellen.**

Graphische Abbildungen:

- Die Abbildungen umfassen die Detailzeichnung der Hauptaggregate der Maschine
- Die Aufgliederung der Abbildungen ist in "TAV. 0" angegeben.
- Jedes Ersatzteildetail ist mit einer **Positionsnummer** identifiziert; **die eingerahmten Positionsnummern identifizieren die empfohlenen Ersatzteildetails.**

Tabellen:

- In den Tabellen sind die **Positionsnummern**, die **Beschreibung** und der **Code** des Teils aufgelistet.
- Ist dieselbe Positionsnummer mehrmals in Zusammenhang mit anderen Code angegeben, muß bei der Bestellung die Maschinennummer angegeben werden, um den Code des zu liefernden Ersatzteils ausfindig machen zu können.

Um eines oder mehrere Ersatzteile zu bestellen, anhand der "TAV.0" die Abb. feststellen, in der das Maschinenaggregat dargestellt ist, für das das Teil bestimmt ist; anhand dieser Abb. dann das Ersatzteil und die entspr. Positionsnummer identifizieren und schließlich in den Tabellen die Positionsnummer und den entspr. Code suchen.

E

COMO CONSULTAR EL MANUAL DE PIEZAS DE REPUESTO

El Manual Piezas de Repuesto está formado por **Tablas** gráficas y por **Cuadros**

Tablas gráficas

- Las tablas indican el dibujo expuesto individualmente en todos sus particulares (tridimensional) de los grupos principales de la máquina.
- La subdivisión de las tablas está identificada en la "TAV. 0".
- Cada pieza de repuesto se identifica por un **número de posición, los números de posición colocados en un recuadro identifican las piezas de repuesto aconsejadas.**

Cuadros

- Los Cuadros indican **los Números de Posición, la Descripción y el Código** de la pieza.
- En el caso de que el mismo número de posición esté indicado más de una vez, pero asociado a códigos diferentes, es necesario, en el momento del pedido, especificar la matrícula de la máquina que posee el cliente, con el fin de identificar el código de la pieza que hay que suministrar.

Al hacer el pedido de una o más piezas de repuesto, identificar en la "TAV. 0" la tabla en la que está representado el grupo máquina en donde se halla la pieza, por consiguiente identificar en la tabla la pieza y el relativo número de posición, después buscar en los cuadros el número de posición y el correspondiente código.

STARCOMPACT 60

Pos.	Cod.	Descrizione	Description	Description	Bezeichnung	Descripcion
019	131160660	CONDENSATORE ARIA CONTARDO	AIR CONDENSER	CONDENSATEUR A AIR	LUFT KONDENSATOR	CONDENSADOR AIRE
031	177110350	VALVOLA MEMBRANA SILIC.BIANCO	VALVE	SOUPAPE	VENTIL	VALVULA
055	171195040	ATTACCO TUBO GOMMA	CONNECTION	CONNEXION	ANCHLUSS	CONEXION
072	193010040	ESTRATTORE OR	O-RING EXTRACTOR	EXTRACTEUR DE JOINTS	O-RING AUSHEBER	EXTRACTOR
091	175100590	SPINA ALBERO AGITAZIONE	PIN	CHEVILLE	STIFT	CHAVETA
102	158185130	GHIERA ATTACCO RAPIDO	RING NUT	COLLIER DE SERRAGE	SICHERUNGSRING	ABRAZADERA
102A	158175030	GHIERA ATTACCO TUBO GOMMA	RING NUT	COLLIER DE SERRAGE	SICHERUNGSRING	ABRAZADERA
139	173115380	ROS.PIANA 6 18 1,5 A2	WASHER	RONDELLE	SCHEIBE	ARANDELA
139A	173125130	ROS.PIANA 12 62 3 GOMMA	WASHER	RONDELLE	SCHEIBE	ARANDELA
159	155101680	ALBERO TRASMISSIONE MOTO	DRIVE SHAFT	ARBRE DE TRANSMISSION	ANTRIEBSWELLE	ARBOL DE TRANSMISION
161	529410305	BOCCOLA MB 08.12 DU/B	BUSHING	BAGUE	BUCHSE	CASQUILLO
161A	529410307	BOCCOLA MB 14.20 DU/B	BUSHING	BAGUE	BUCHSE	CASQUILLO
161B	157120190	BOCCOLA COLLEG.ALBERO E MOTORE	BUSHING	BAGUE	BUCHSE	CASQUILLO
161C	157135150	BOCCOLA SUPPORTO DOCCETTA	BUSHING	BAGUE	BUCHSE	CASQUILLO
162	155103280	ALBERO VENTOLA AGITAZIONE	MIX TANK AGITATOR	AGITATEUR CUVE	RUEHRWERKSBEHAELTER	AGITADOR MEZCLA EN CUBA
163	164130920	GUIDA ALBERO AGITATORE	AGITATOR SHAFT HOUSING	GUIDE ARBRE	WELLENFUERUNGSMANTEL	GUIA ARBOL
168	561182122	C.UNITE H.CAE9460TF 220240501	COMPRESSOR	COMPRESSEUR	KOMPRESSOR	COMPRESOR
170	551310179	M.VENTILATORE 34W 220/50/60/1	FAN MOTOR	MOTEUR VENTILATEUR	VENTILATOR MOTOR	MOTOR VENTILADOR
176	133119210	VENTOLA D.250	FAN BLADE MOTOR	HELICE MOTEUR VENTILATEUR	VENTILATORFLUEGEL	VENTILADOR
177	583100148	PRESS.DANF.CC20W 29/20 060F1130	PRESSURE SWITCH	PRESSOSTAT	DRUCKWAECHTER	PRESOSTATO
186	192111940	DECALC.FRONTALE	FRONT PANEL DECAL	DECALCOMANIE	ABZIEHBILD	CALCOMANIA

Pos.	Cod.	Descrizione	Description	Description	Bezeichnung	Descripcion
		STARCOMPACT 60		FRONTALE		
200	573810121	MICROPROC.ST62T25 VER.TMK10.HEX	MICROPROCESSOR	MICROPROCESSEUR	MIKROPROZESSOR	MICROPROCESADOR
231	158270080	FLANGIA RIDUTTORE	FLANGE	BRIDE	FLANSCH	BRIDA
236	588300336	SOTTOTAPPO PLASTICA D.19	PLUG	BOUCHON	VERSCHLUSS	TAPON
240	591000224	RUOTA GIR.P68 C/B 80X30 FRENO	PIVOTING WHEEL	ROUE	SCHWENKBARES RAD	RUEDA
241	591000123	RUOTA FISSA P68 C/B 80X30 SF	FIXED WHEEL	ROUE	FIXES RAD	RUEDA
250	102144070	COPERCHIO VASCA	TANK COVER	COUVERCLE CUVE	BEHAELTERDECKEL	TAPA TANQUE
253	102127530	CERNIERA FISSA DX BIANCA	HINGE	CHARNIERE	SCHARNIER	BISAGRA
253A	102127630	CERNIERA FISSA SX BIANCA	HINGE	CHARNIERE	SCHARNIER	BISAGRA
255	511528510	VITE TCCI M 5X 10 DIN85 A2	SCREW	VIS	SCHRAUBE	TORNILLO
255A	171115010	VITE MOLLA NOTTOLINO	SCREW	VIS	SCHRAUBE	TORNILLO
278	178150570	MOLLA FLANGIA RUBINETTO FILO D.2	TAP SPRING	RESSORT	FEDER HAHNFLANSCH	RESORTE
287	588150409	PORTAGOMMA L PLAST.3/4FXD.16	SPIGOT HOSE CONNECTOR	RACCORD POUR TUYAUX	ROHRTRAEGER	PORTAGOMA
287A	588150360	PORTAGOMMA D PLAST.1/2FXD.13	SPIGOT HOSE CONNECTOR	RACCORD POUR TUYAUX	ROHRTRAEGER	PORTAGOMA
329	542000148	ANELLO ANGUS A 8X16X7	O-RING	BAGUE DE RETENUE	SPEZ. DICHTUNGSRING	ANILLO RETEN
351	157221130	LANCIA EROGAZIONE ACQUA	WATER DISPENSER	DISTRIBUTEUR D'EAU	ENDSTUECK WASSERZUFUHR	DESPENSADOR DE AGUA
352A	158195050	GUARNIZ.	SEAL	GARNITURE	DICHTUNG	GUARNICION
352B	549000552	GUARNIZ.131.D15/000.S	SEAL	GARNITURE	DICHTUNG	GUARNICION
370	102154310	COPERCHIO ALBERO VENTOLA	COVER	COUVERCLE	DECKEL	TAPADERITA
424	589800129	TUBO PLASTICA D.10/16 RINFORZ.	PIPE	TUBE	SCHLAUCH	TUBO
424A	589110031	TUBO DOCCIA MONOFOR.MF 3/8"	PIPE	TUBE	SCHLAUCH	TUBO
424B	589801019	TUBO GOMMA ALIMENTARE D.14/19	PIPE	TUBE	SCHLAUCH	TUBO

Pos.	Cod.	Descrizione	Description	Description	Bezeichnung	Descripcion
425	581300303	ELETTROV.ELBI TIPO 340-9000 220V	WATER SOLENOID VALVE	ELECTROVANNE A EAU	MAGNETVENTIL	ELECTROVALVULA AGUA
433	178100260	MOLLA C I 1,3 15 40 3,68	SPRING	RESSORT	FEDER	RESORTE
447	155130320	ASTA	TAP ROD	LEVIER ROBINET	HAHNSTIFT	VARILLA GRIFO
450	173105280	POMELLO RUBINETTO	FAUCET KNOB	POMMEAU ROBINET	HAHNGRIFF	BOTON DE GRIFO
459	177110370	VALVOLA CHIUSURA RUBINETTO	CLOSING TAP VALVE	SOUPAPE FERMETURE ROBINET	HAHN ABSPERRVENTIL	VALVULA DE CIERRE DE GRIF
500	558420033	RIDUTT.TR10 1:30 GAVAGNI	GEAR BOX	REDUCTEUR	GETRIEBE	REDUCTOR
575	573800573	PULSANT.MOD.PSK (AGE) SENZA PAN.	PUSH-BUTTON PANEL	CLAVIER	TASTATUR	CAJA DE PULSADORES
600	558420153	MR.MTR 10 1:30 CL.F 22050601	REDUCTION GEAR BOX	MOTO-REDUCTEUR	MOTORGETRIEBE	MOTORREDUCTOR
605	573700160	CENTRAL.AGEMASTER 60+60	ELECTRONIC BOARD	CENTRALE ELECTRONIQUE	ELEKTRONISCHE STEUERKASTE	CENTRALITA ELECTRONICA
607	572910101	SONDA TS TIPO P09251 C.SILIC.	PROBE	SONDE	FUEHLER	SONDA
772	599100123	SCOVOLINO D. 30X640	FINE BRUSH	ECOUVILLON	REINIGUNGSBUERSTE	CEPILLO
830	743000110	TUBETTO PETROL-GEL 3540110	FOOD GRADE LUBRICANT	TUBE DE VASELINE	GELILUBE TUBE	TUBO GELILUBE
840	178600160	SPATOLA PULIZIA	CLEANING SPATULA	SPATULE	SPATEL	PALETA DE LIMPIEZA
912	552120153	M.CARP.M56 4 B14 220/50/60/1	MOTOR FOR GEAR BOX	MOTEUR POUR REDUCTEUR	MOTOR FUER MOTORGETRIEBE	MOTOR MOTORREDUCTOR
921	572910140	SONDA DRY REED N.O. 29	SAFETY SWITCH	SONDE DRY REED	REEDFUEHLER	SONDA DRY REED
924	155280010	NOTTOLINO	PLUG	CLIQUET	KLINKE	TRINQUETE
1225	541000225	OR 3,53 32,93 NB 70 4131	O-RING	JOINT OR	OR-DICHTUNG	JUNTA OR

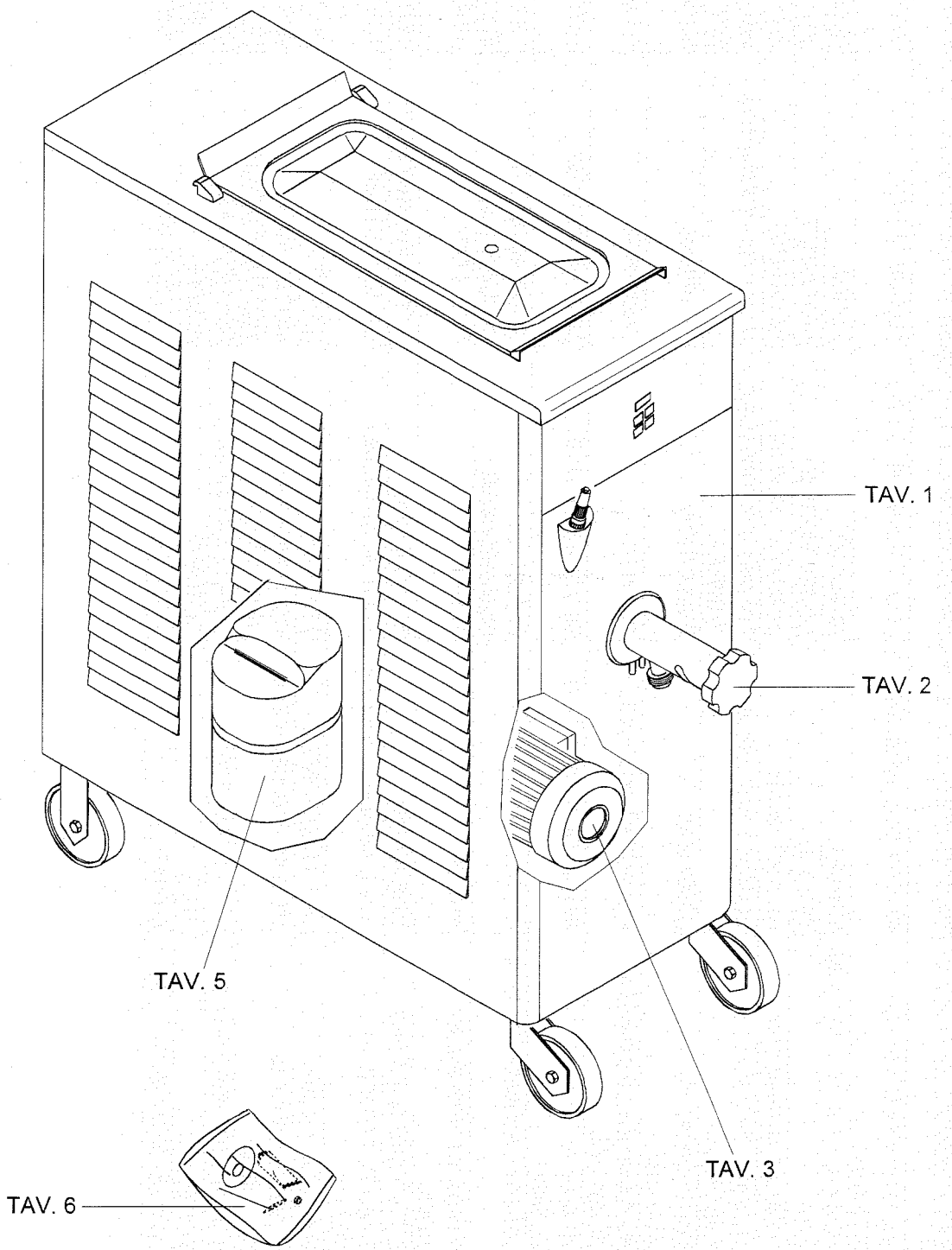
TAV. 1
TAV. 2
TAV. 3
TAV. 5
TAV. 6

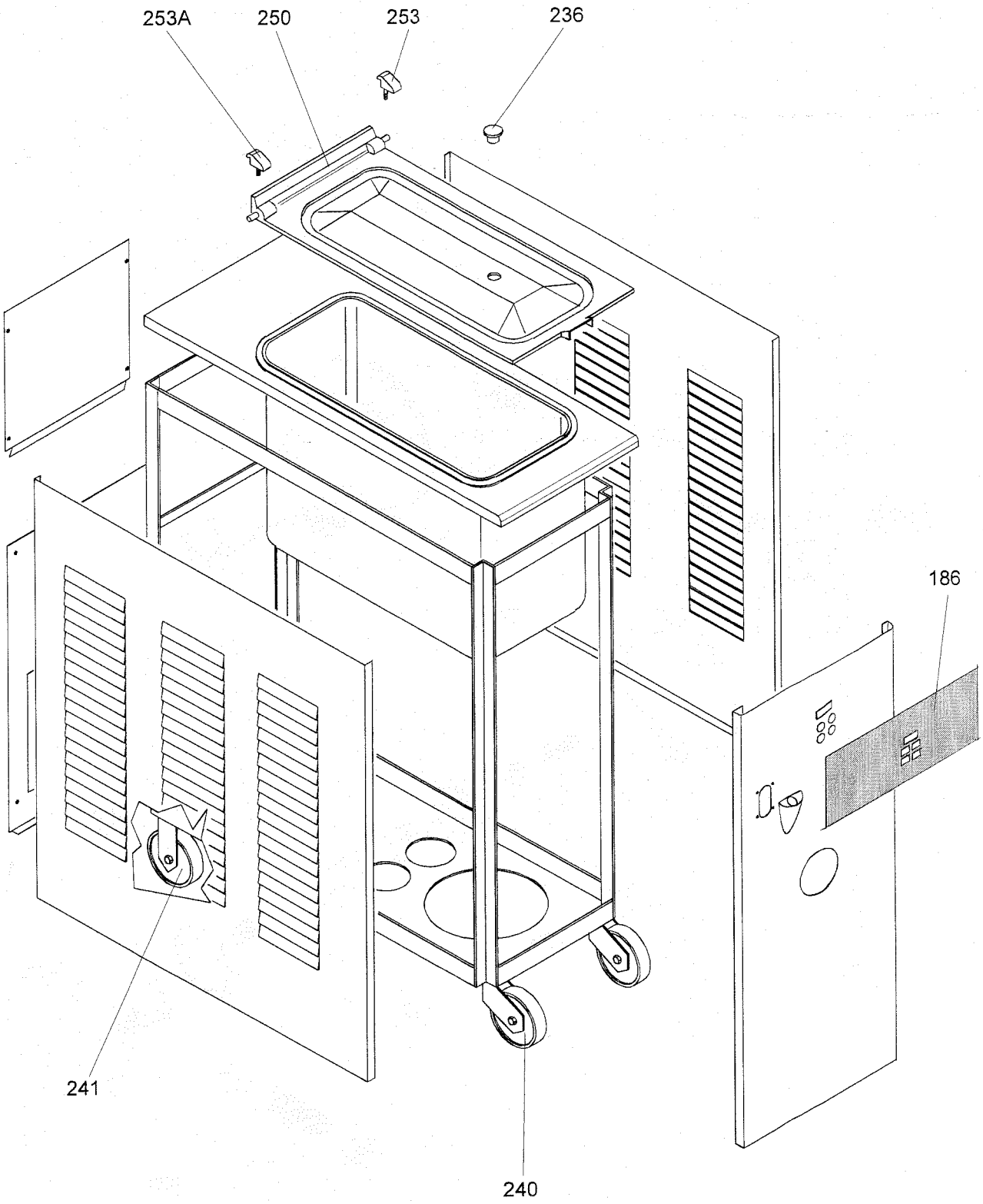
253A
250
253
236
186
241
240

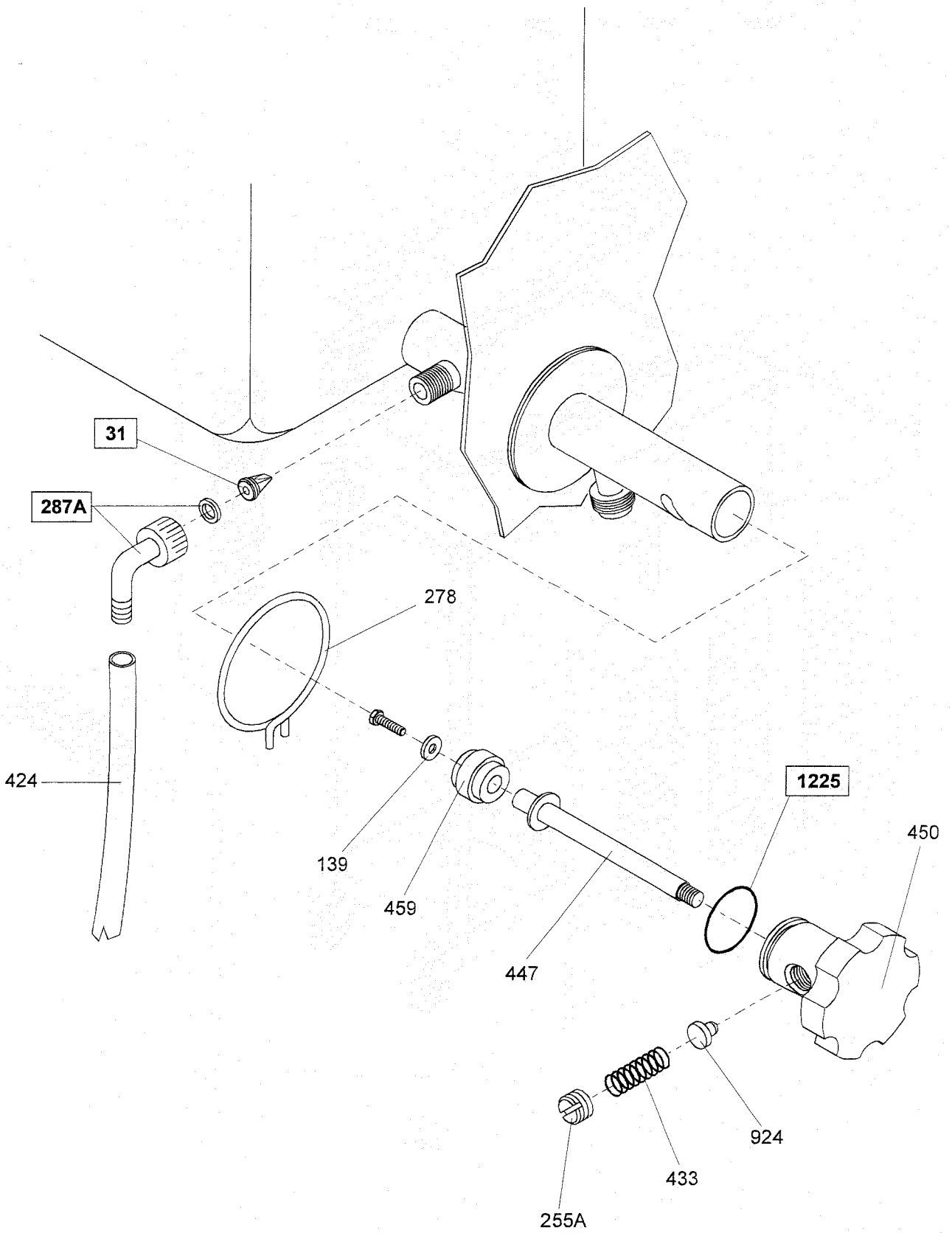
31
287A
278
424
139
459
447
1225
450
924
433
255A

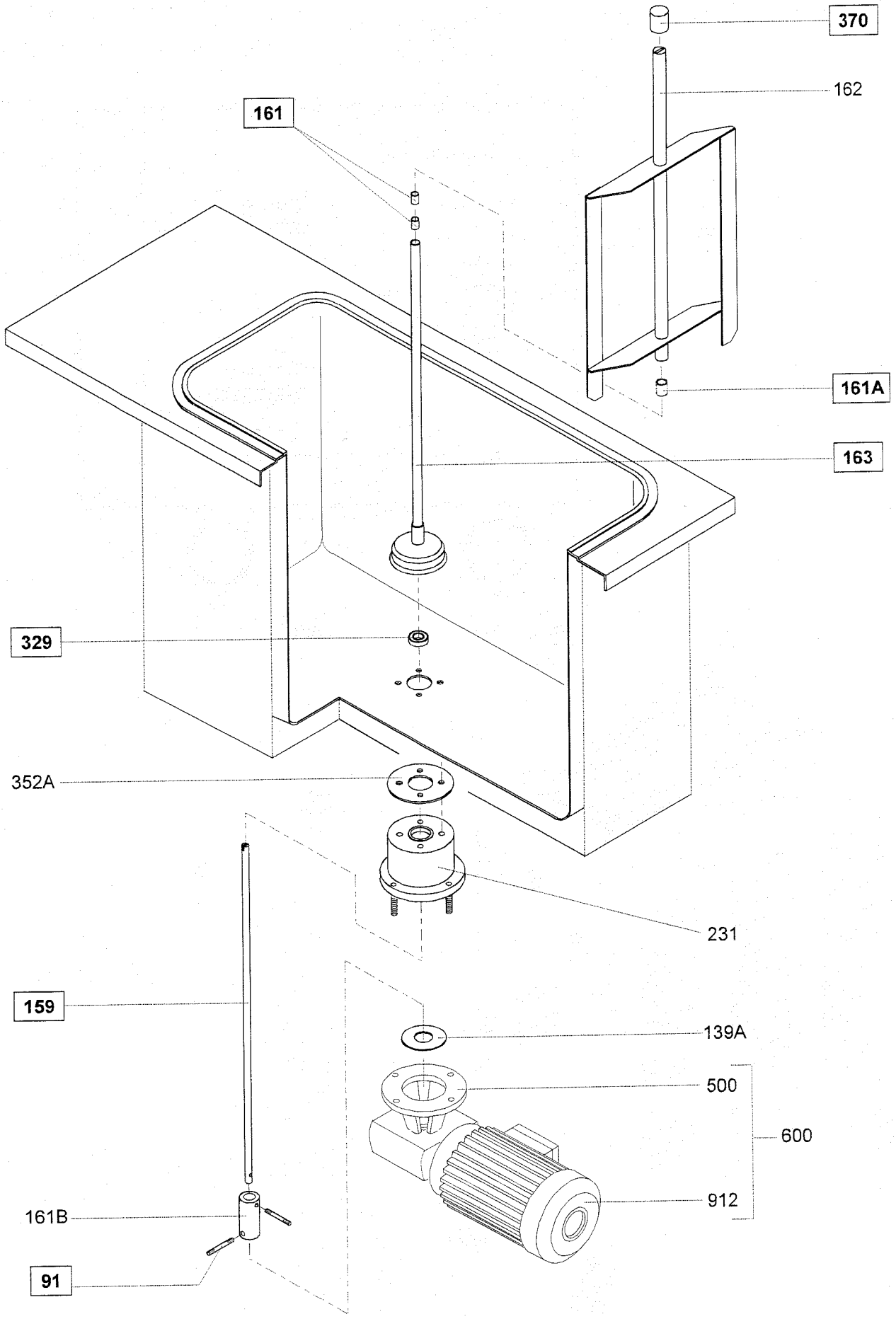
370
162
161
161A
163
329
352A
231
159
139A
500
600
912
161B
91

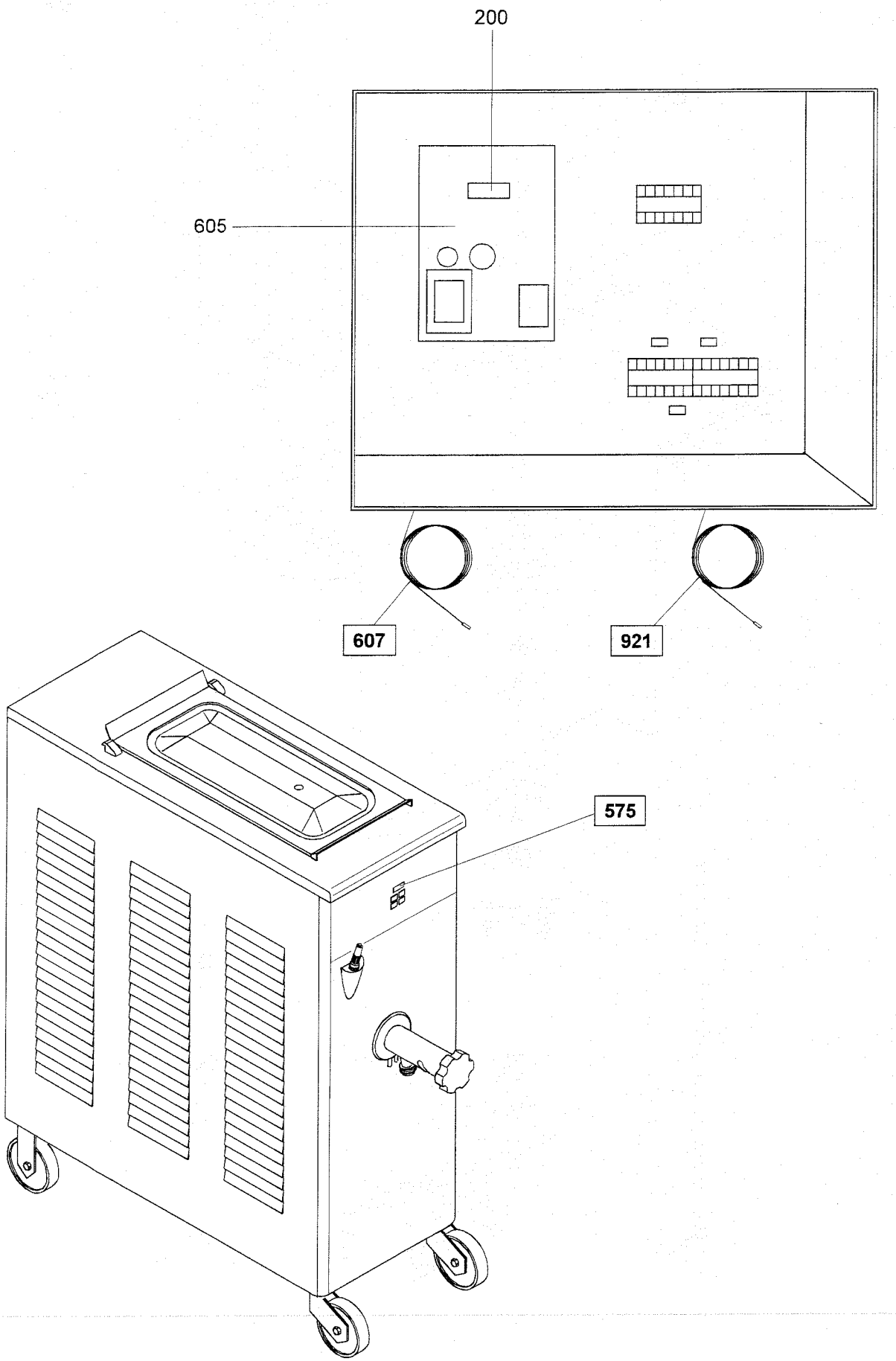
200
605
607
921
575

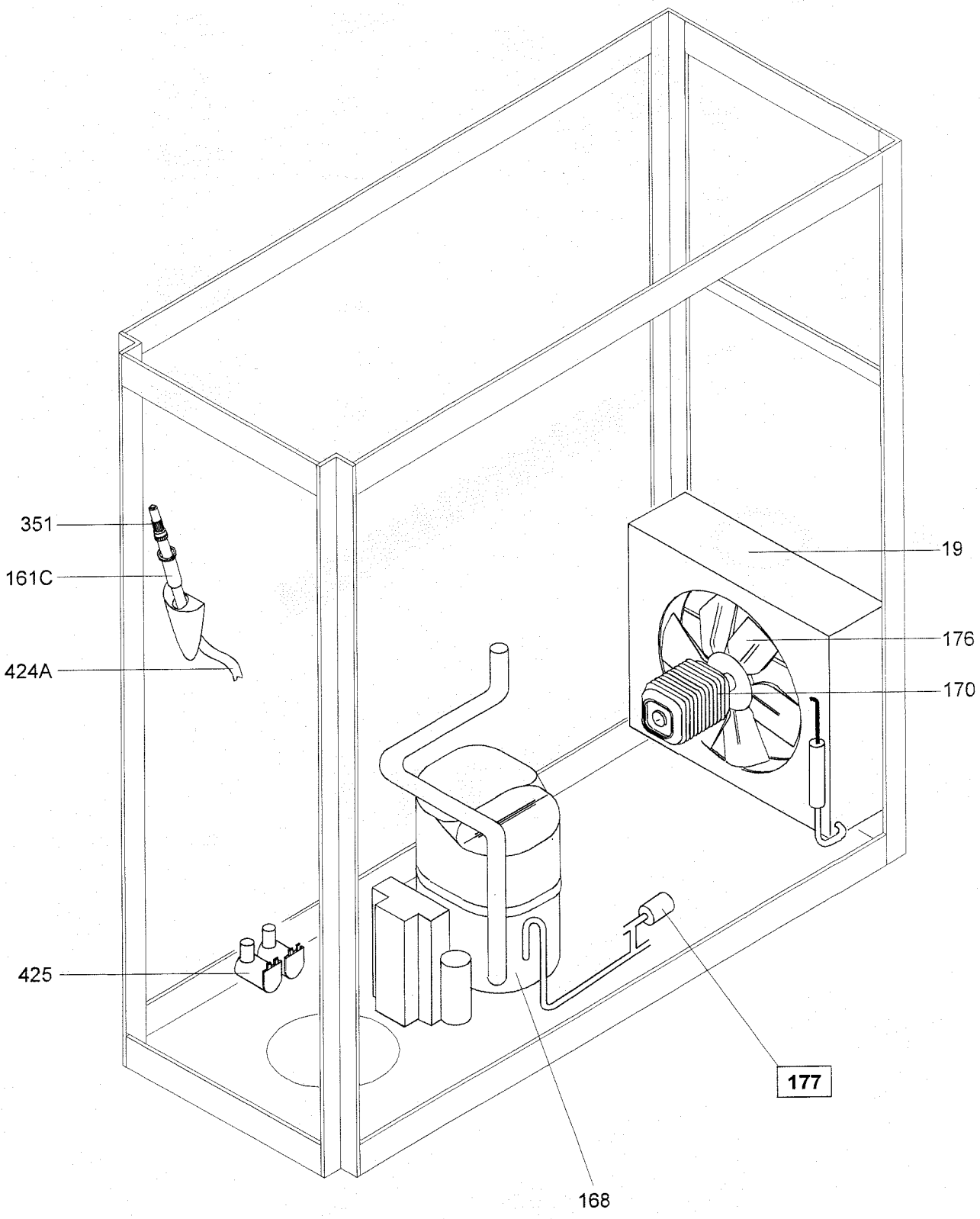
351
161C
424A
425
19
176
170
177
168

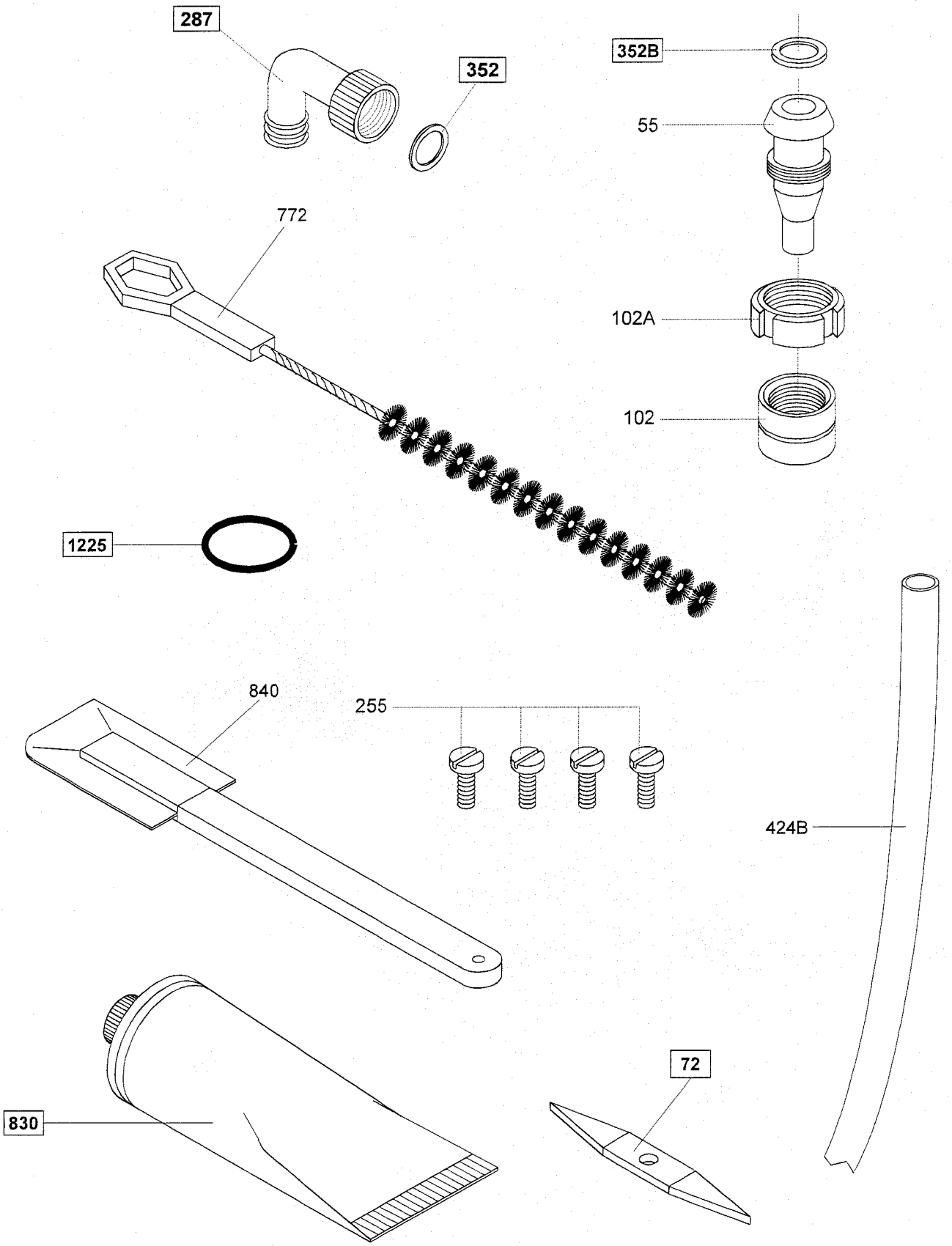
287
352
352B
55
772
102A
102
1225
840
255
424B
830
72

PROMAG
Via Benaco, 4
20098 San Giuliano Milanese (MI) - italy
Tel. (02) 98296.1
Fax (02) 9880232