Technohoy

CARL HOYER A/S

MACHINERY WORLD

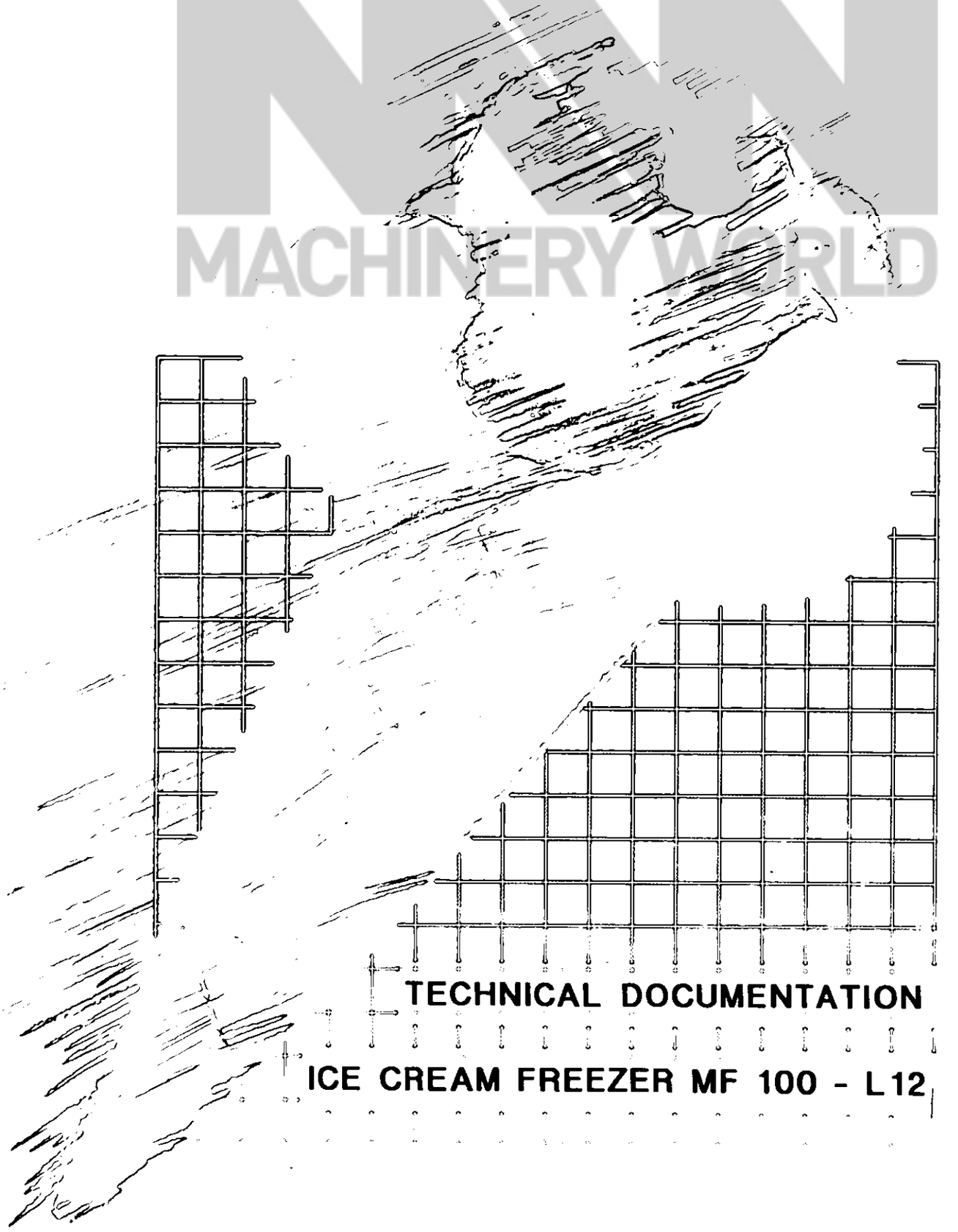

TECHNICAL DOCUMENTATION

ICE CREAM FREEZER MF 100 - L12

I C E C R E A M M A C H I N E S

Technoy

TD

MF 100

No. L12

DE VALK

HELLENDOORN

05-4B-05

CARL
HOYER
A/S

cleardata® limited

cleardata Ltd
Innovation House
1 Coniston Court
Blyth Riverside Business Park
Blyth
Northumberland
NE24 4RP
Tel 01670 356 734
Fax 01670 356 439
www.cleardata.co.uk

The following documents are of poor original quality

Quality checked by cleardata Ltd Quality Control Department

FAX TRANSMISSION

APV Technohoy
Axel Kiers Vej 28-30
DK-8270 Aarhus - Højbjerg
DENMARK
Telefax +45 86 29 27 80

YOUR FAX NO:	31 5486 - 54726
NO OF PAGES INCL. THIS ONE:	1
DATE:	01.07.94
TO COMPANY:	IJSFABRIEK DE VALK B.V., Hellendoorn
ATT.:	Ms IR Noëlla de Jager
FROM:	Mr Jens Juhl
PLEASE CALL US AT +45 86 29 21 88 IF TRANSMISSION IS RECEIVED INCOMPLETE	

Dear Ms IR Noëlla de Jager,

With reference to our pleasant telephone conversation of 27.06.94 I am pleased to confirm that the MF 100 was supplied without refrigerant. The right refrigerant to use is R 22 (HCFC gas) and the charge is 8 kg as standard.

Further a new set of technical documentation will be sent to you as soon as possible.

I hope that the above-mentioned information complies with your wishes.

Yours faithfully,

APV TECHNOHOY

Jens Juhl
Regional Export Manager

TECHNICAL DOCUMENTATION

APV Technohoy

ICE CREAM FREEZER

MF 100

SERIAL NO. L 12

Ijsfabriek de Valk B.V.

Caraco Ijs

Hellendoorn - NL

APV Technohoy

	GENERAL INFORMATION
I-01	Spare parts
I-02	General information
I-02	Working principle
I-03	Technohoy product description
	INSTALLATION
II-01	Drawing MF 100 - U 25819
II-03	Electric connection
II-03	Air connection
II-04	Water connections
II-04	Connection for mix
II-04	Connection for ice cream
II-04	The built-in refrigerating system
II-05	Preparations before the first start
	OPERATION
III-01	Starting the freezer
III-03	Stopping the freezer
III-04	Day to day running of the freezer
III-06	Trouble shooting
III-07	Trouble shooting
III-08	Cleaning programme
III-09	Adjusting/Readings of Mixflow computer
	DESCRIPTION AND MAINTENANCE
IV-01	The ice cream and air system - Diagr. D 25942
IV-03	Non-return valve / Maintenance
IV-04	Pumps: TP1 Mix pump - TP2 Ice cream pump
IV-04	C.I.P. (Cleaning-in-place)
IV-04	Adjusting of pump ratio
IV-04	Pump drive
	Drawings of pumps and brackets
IV-05	The refrigerating system and
	Refr. components - Diagr. D 17002
IV-08	The cooling compressor is stopped
IV-09	The freezing cyl. and main drive-Solid mutator
IV-10	Maintenance
IV-12	Reconditioning of worn scraper blades
IV-13	The electrical installation -
	Wiring Diagram . D 25737 1-9

APV Technohoy

GENERAL INFORMATION

APV Technohoy FREEZER MF - CIP

Safety:

Apart from the warnings described various places in the operating instructions you should be aware of the following points:

WARNING !

1. **NEVER** remove the freezer's frontal cover or its doors when it is in operation.

2. **ALWAYS** interrupt the freezer's power supply on the main switch before demounting covers and doors.

3. **ALWAYS** check that the freezer's power supply has been interrupted before carrying out the manual freeze-up control.

Safety cut-out:

The control cabinet is equipped with a main switch/circuit interruptor which will produce an immediate stop if the box is opened when the freezer is in operation. (The main motor stops.)

SPARE PARTS

When ordering spare parts for your APV Technohoy MF 100 Ice Cream Freezer, please always state Machine Type, Machine Serial Number, and if possible Drawing Number and Figure Number.

EXAMPLE:

MF 100 Number 6, Drawing U 7887.
Position Number 7.

A P V T E C H N O H O Y

Axel Kiers Vej 28-30

DK-8270 AARHUS-HØJBJERG

DANMARK

PHONE +45 86 29 21 88

TELEFAX +45 86 29 27 80

GENERAL INFORMATION

The APV Technohoy Ice Cream Freezers MF 50, MF 75, MF 100, and MF 200 are selfcontained units with built-in refrigerating systems.

WORKING PRINCIPLE

The ice cream mix is metered into the freezing cylinder by a positive pump, and a constant flow of air is fed in together with the mix. During the passage through the cylinder the air is whipped into the mix by the action of a rotating mutator. Liquid refrigerant R 22, evaporating in the cooling jacket, surrounding the freezing cylinder, supplies the refrigeration. Hardened scraper blades of the best quality, hinged to the mutator, scrapes off the ice cream, continuously as it freezes on to the inside cylinder wall. Whipping and freezing takes place under air pressure, which can be regulated to obtain the desired overrun. A second pump forwards the finished product from the outlet of the cylinder to the discharge piping. The flow of liquid refrigerant is regulated by an automatic thermovalve, and the evaporating pressure and temperature is regulated by an automatic back pressure regulator.

The smallest model, MF 50, which is designed primarily for laboratory purposes, has a variable speed drive for the mutator, allowing any speed between app. 400 and 1000 r.p.m.

The mutator in the MF 50 is of a special flat and solid design. The freezer has a flowmeter with flowcontroller, which makes it possible to check the constancy of the airflow.

APV Technohoy MF Freezers — PRODUCT DESCRIPTION

November 1993

TECHNICAL DATA for standard models	MF 50 Laboratory freezer	MF 75 Spec. production f.limited output	MF 100 / MF 100E Production freezer	MF 200 Production freezer
Nominal output - Ice cream l/h	20 - 100	30 - 160	84 - 420	100 - 550
Imp. Gall	4.5 - 22	7 - 35	19 - 92	22 - 121
U.S. Gall	5.5 - 27	8 - 42	22 - 111	27 - 145
Conditions:				
Mix-Inlet temp. +5°C (+41°F)	Mix type: Standard ice cream mix with 38% dry ingredients content. Following the topical mix recipe, the exact capacity and outlet temperature can be determined.			
Ice cream-Outlet temp. -5°C (+23°F)				
Overrun 100%				
Evap./condensing temperature °C	-25 / + 40	-25 / + 40	-25 / + 40	-25 / + 40
°F	-13 / +104	-13 / +104	-13 / +104	-13 / +104
Refrigerating effect W	6000	10700	16000	16000
kcal/h	5160	9202	13760	13760
Surface freezing tube cm²	628	942	2639	3769
Installed power kW	6.4	7.4	17.3	17.3
Power connection (standard)	3 x 380V, 50 c/s	3 x 380V, 50 c/s	3 x 380V, 50 c/s	3 x 380V, 50 c/s
Mix-Inlet piping i ø mm	13.0	13.0	16.0	16.0
Ice cream-Outlet piping ø mm	25.0	25.0	38.0	38.0
Air connection ø inch	3/8	3/8	3/8	3/8
Air consumption l/h	50	80	210	275
Required air pressure bar	7	7	7	7
Max.Water req.app.(max.+25°C) l/h	500	600	1560	1725
Required water pressure bar	3 - 4	3 - 4	3 - 4	3 - 4
Water-Inlet connection ø inch	1/2	1/2	3/4	3/4
Water-Outlet connection ø inch	1/2	1/2	3/4	3/4
Mutator speed 50 c/s rpm	300 - 1000	600	430	300
OPTIONAL mutator speed rpm		200 - 600	200 - 400	200 - 400
Standard mutator	Solid mutator	Solid mutator	Open type mutator	Open type mutator
OPTIONAL equipment		Open type mutator	Solid mutator	Solid mutator
Mix inlet pump	Piston pump	Piston pump	Piston pump	Piston pump
Ice cream outlet pump	Back-pressure valve	Gear pump	**MF100** Gear pump **MF100E** Back-press.valve	Gear pump

Owing to constant development and improvement of the freezers, the above spec. may be subject to alteration without prior notice.

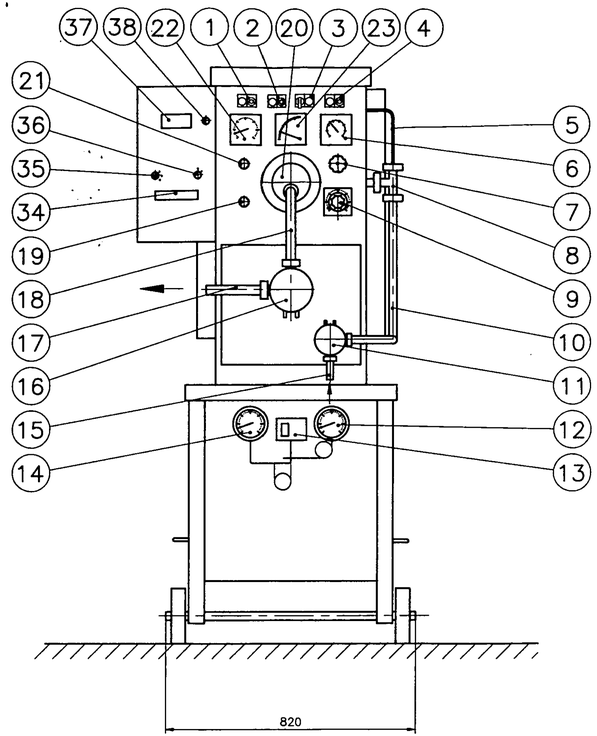

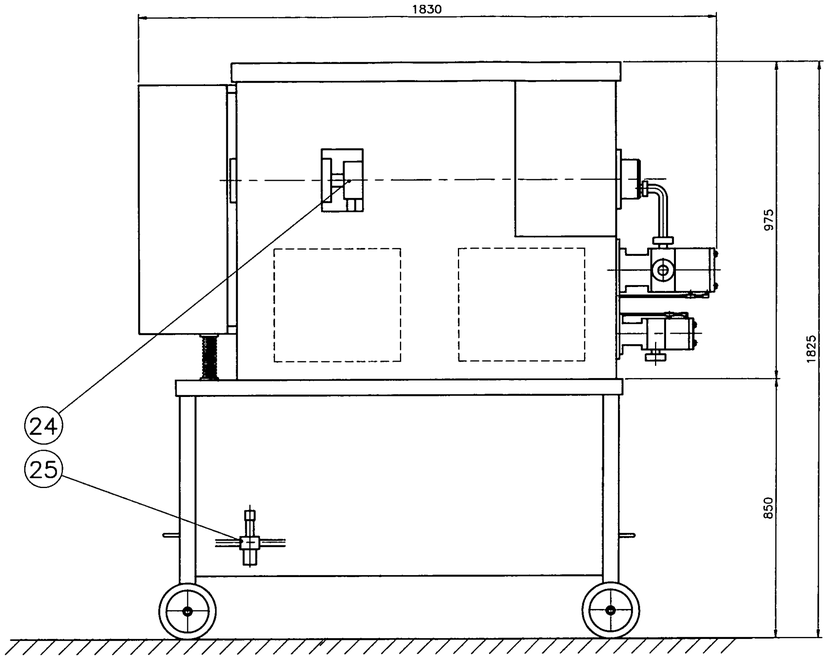

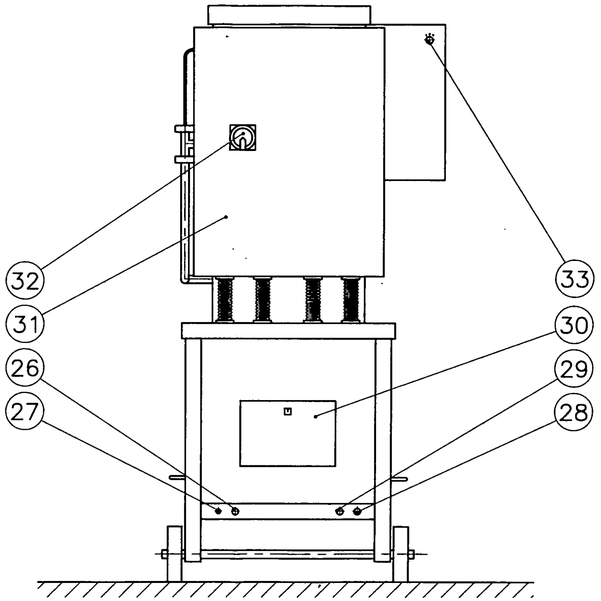

Antal:	Technohoy CARL HOYER A/S	SKALA 1:10	Tegn.: JS
Stykliste:			Dato: 3.12.93
Maskine:			Rev.
Evt. bem.:	MF100		Godk.
	Materiale	Maskintype L	U25819

Tolerancer ifig. DS 2075 (middel), hvor intet andet er angivet. Må ikke kopieres eller overdrages til trediemand uden tilladelse fra Technohoy.

DRAWING U 25819

1. Start and stop of pump motor.
2. " " " " main motor.
3. Start and stop of C.I.P. /
   Yellow signal for C.I.P. ON.
4. Start and stop of refr. compressor.
5. Air connection to cylinder.
6. Compound pressure and temperature gauge
   for the refrigerant.
7. Back pressure regulator / Refrigerant temp.
8. T-piece in mix line with non-return valve.
9. Speed regulation of mutator.
10. Mix line.
11. Mix inlet pump.
12. Suction pressure gauge.
13. Pressure control.
14. Condensing pressure gauge.
15. Mix connection.
16. Ice cream outlet pump.
17. Ice cream outlet pipe.
18. Vertical ice cream pipe.
19. Pump speed regulator.
20. Front cover of freezing cylinder.
21. Air pressure regulator/back pressure valve.
22. Air pressure gauge.
23. Amperemeter for main motor.
24. Rear end cylinder cover with rotary shaft
    seal.
25. Water regulating valve.
26. Screwed connection for electrical cable.
27. Air inlet.
28. Water inlet.
29. Water outlet.
30. Main current cabinet.
31. Cabinet containing:
    Danfoss VLT 3008 Frequency conv. (mutator).
    Danfoss VLT 2020 Frequency conv. (pump).
32. Main switch / Circuit interrupter.

33. Key switch B (Mixflow computer).
34. Display for Mixflow computer.
35. Button with pos. I 0 II (Mixflow computer).
36. Key switch A (Mixflow computer).
37. Dig. Flowmeter / Display.
38. Airflow regulator.

Del af _____ Type _____

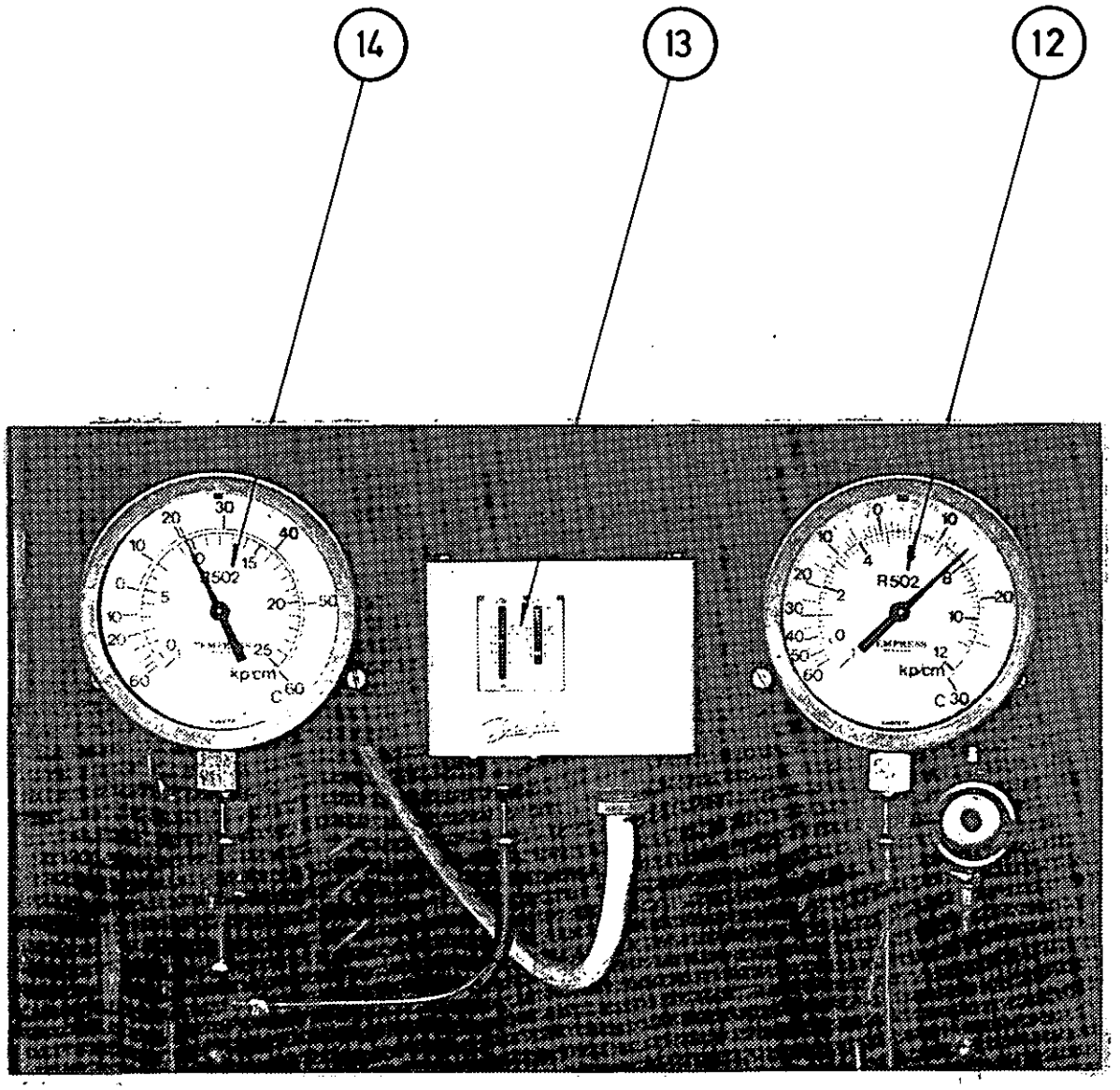

Alle mål uden tolerance ± mm

Konstr.	09.12.1982.	
Tegn.	C. Høyer	
Godk.		

Technohøy
CIVILINGENIØR O·G·HØYER
AARHUS · DANMARK

Tegning nr.: D 5431

Målestok:

Materiale:

Temperature gauges

H.M.(09) 162727

INSTALLATION

The freezer is completely self-contained and needs only connections for electricity, cooling water, compressed air and ice cream mix, to be ready for operation. To take full advantage of this system, the freezer is equipped with transport wheels and can easily be moved from one location to another in the factory.

ELECTRIC CONNECTION

The freezer - **standard model** is built with a three phase ac system for 380V + N + earth connection, 50 c/s. For safety reasons all control circuits are fed from a transformer to 24 volts.

AS AN OPTIONAL, all MF Freezers can be delivered with the required voltage and frequency.

A main current cabinet contains fuses and starters with overload protection. A flexible cable of ample size to comply with local regulations, should be drawn through the screwed connection 26 on drawing U 25819, and from there to another screwed connection in the bottom of the cabinet.

The three phases in the cable should be connected to the main switch L1, L2, L3, +N and ground terminals. **SEE WIRING DIAGRAM**!

AIR CONNECTION

A supply of clean, dry air under a pressure of 7 bar should be provided. Normally the air is taken from an existing supply system but, as an alternative, the freezer can be supplied with an oil-free, built-in air compressor of the diaphragm type.

An air filter and a water filter can be supplied as optional extra.

WATER CONNECTIONS

The inlet and outlet for cooling water have adaptors for rubber water hoses. A water pressure of 3-4 bar is required.

CONNECTION FOR MIX

This connection must be made with utmost care to obtain trouble free operation. It is essential, that the mix is fed to the inlet of the mix pump under positive pressure. This can be obtained by placing the mix tank at a higher level than the inlet of the mix pump, so that the mix can flow to the pump by gravity alone. Should this not be possible, it is recommended to install a centrifugal booster pump, which then can be used for CIP-cleaning also. The important thing is to avoid sub-atmospheric pressure in the mix line AND THEREBY TO PREVENT THE INTAKE OF AIR THROUGH POSSIBLE LEAKS, which would make accurate control of the overrun impossible.

CONNECTION FOR ICE CREAM

It is important to keep the outlet piping as short as possible and to avoid to make reductions in diameter relative to the size of the outlet of the discharge pump. Never use insulated ice cream pipes.

THE BUILT-IN REFRIGERATING SYSTEM

Is charged with the proper amount of refrigerant, and compressor oil. Normally no adjustment are required before initial starting up. The refrigerant pressure gauges 12 and 14 on drawing U 25819 should, by standstill, show a temperature close to the temperature of the surroundings.

If however the gauges show zero pressure, it is an indication, that the freezer has been damaged during transport with loss of the refrigerant charge as consequence. If that is the case, **a competent refrigerating engineer** should be called to find and repair the leak, and recharge the system with refrigerant.

Refrigerant type indication is stated in "Refrigeration components IV-05".
NO OTHER REFRIGERANT MUST EVER BE USED.

PREPARATIONS BEFORE THE FIRST START

BEFORE ATTEMPTING TO START ANY OF THE ELECTRIC MOTORS THE FIRST TIME, THE MUTATOR SHOULD BE REMOVED FROM THE FREEZING TUBE. To do this, remove the connecting pipe, 18 on drawing U 25819. Then turn the front cover 20 of the freezing cylinder 1/12 of a revolution anti-clockwise, using the multi tool, supplied with the freezer for this purpose. NEVER USE THE CONNECTING PIPE AS A HANDLE ! It could very easily be damaged, with leaking o-ring joints as consequence. The cover can now easily be removed and the mutator be pulled out.

Now start the main motor, and watch the direction of rotation of the main shaft.
IT MUST BE ANTICLOCKWISE, when seen through the freezing cylinder.

Now start the pump motor.
THE ROTATION SHOULD BE CLOCKWISE.

If this is not the case, then two phases in the terminal box must be interchanged on the motor, which has the wrong direction of rotation.

PLEASE SEE ENCLOSED WIRING DIAGRAM!

Remove the mix pipe between mix pump and T-piece, 10 on drawing U 25819. Unscrew the other two connections of the T-piece. The rear end cylinder cover with rotary shaft seal can now be removed.

Clean all the parts and reinstall them.

An edible lubricating grease should be used for the shaft seal, the bearings and whereever parts move one against the other. The spring should be able to move the seal ring on the shaft, after having been compressed. Also use this lubricant to keep the O-rings in place in their groves. It facilitates assembly and avoids damage to the O-rings.

STARTING THE FREEZER

WARNING!

No frozen water should be present in the freezing cylinder when the main motor is started, as this can damage the cylinder and mutator parts.

1. Make sure that there is an adequate amount of mix in the mix supply tank.

2. Start the pumps and set the pump speed regulator at a low capacity.

3. Wait until mix comes out of the outlet pipe. Then start the main motor.

4. Start the refrigerating compressor and set the evaporating temperature at about -15° to -20° C. Wait for about 2 minutes to cool down the cylinder.

5. Raise the air pressure slowly from 0 to about 4 bar.

The freezer is now in operation. Wait until the product comes out in a constant flow before making further adjustments.

First considerations are overrun and stiffness. Check the overrun by weighing a known volume, for instance 1.0 l. For ice cream of normal composition the liter weight should be around 550 g. The overrun is increased by increasing the air pressure, and vice versa.

Stiffness is depending on the refrigerant evaporating temperature and the throughput of ice cream. The lower the evaporating temperature and the lower the throughput, the stiffer the product will be.

When stiffness is increased, the load on the main motor is also increased, which is reflected by a higher reading of the motor amperemeter.
When increasing stiffness, the motor amperemeter should therefore always be under careful observation to avoid overloading the motor, which eventually might result in so called "freeze-up." **See later.**

Now increase pump speed to obtain higher output, if so desired. This will have a negative effect on stiffness, which must be compensated for by lowering the evaporating temperature. By repeating these alternating adjustments, the desired output and overrun can be reached within the capacity of the freezer. Overrun will vary simultaneously with variations in output and stiffness. Check the overrun and adjust the air pressure accordingly. Output cannot be increased beyond a certain point determined by mix recipe, and the capacity of the refrigerating compressor. This point has been reached, when the evaporating temperature cannot be driven further down. The back pressure regulating valve in the refrigerating system is then wide open. The refrigerant pressure gauges 6 and 12 on drawing U 25819 will then show nearly the same evaporating temperature.

Adjustments should always be made one at a time, and sufficient time should be allowed for observation of the effect, before the next adjustment is made.

When ice cream outlet temperature goes lower than -6°C to -7°C, be careful not to have a "freeze-up".

STOPPING THE FREEZER

To stop the freezer proceed as follows:

1. Stop the refrigerating compressor.

2. Turn the airflow regulator 38 on drawing U 25819 anticlockwise until the display 37 shows zero.

3. Wait until the product becomes liquid and the amperemeter shows no-load current.

4. Stop the main motor.

5. Stop the pumps.

6. C.I.P. is activated by turning the knob 3 on drawing U 25819 clockwise. Yellow signal lights up.

IT IS IMPORTANT, THAT THIS SEQUENCE IS FOLLOWED CLOSELY

DAY TO DAY RUNNING OF THE FREEZER

The freezer should produce ice cream with uniform stiffness and overrun. It should be possible to obtain the desired values by using the controls on the freezer correctly. It is essential for close overrun control, that the pressure in the inlet of the mix pump is constant and positive. In this way intake of false air is avoided, through possible leaks in the mix line. **See page II-05**

The experienced operator always keeps a keen eye on his instruments, because they reflect the inner life of the freezer. The air pressure gauge must be rock-steady, and response to adjustments of the air pressure must be immediate. If also the nonreturn valve is in good condition, one can be reasonably sure, that the air system is in order.

The amperemeter shows the load condition of the main driving motor. The motor load depends on, how hard freezing is, i.e. how low the refrigerant evaporating temperature is, and how high the throughput is. When adjusting the refrigerant temperature, or the throughput, downwards, follow the increase of the ampere reading. THERE IS ALWAYS A POTENTIAL RISK OF OVERLOADING THE MOTOR. Eventually the V-belts may slip or the thermal overload protection may stop the motor. In either case a "freeze-up" is a reality.

The amperemeter has one more important function. Besides the slow, smooth movement of the needle, caused by changes in the evaporating temperature, fluctuations of the mix temperature, varying throughput etc. the needle can also show quick and abrupt movements.

They are an indication, that the scraper blades do not function properly. They do not scrape to the bottom all the time, but slide over a thin film of ice cream, frozen to the cylinder wall, especially if the evaporating temperature is very low, until they suddenly cut through to the cylinder wall again, which causes a jump in the motor current. If these jumps get very pronounced, the scraper blades should be inspected and reconditioned.
See later.

The third instrument is the compound gauge showing both the evaporating pressure and the evaporating temperature. For the operation of the freezer, only the evaporating temperature is of interest. It is not possible to say, what the evaporating temperature should be. The lower throughput, the stiffer the ice cream, the lower freezing point of the mix the lower the evaporating temperature has to be.

On the following two pages some typical questions and answers are tabulated.

Product too soft	Evaporating temperature too high	Back pressure regulator not opened enough	Open valve to lower evaporating temperature
		Compressor loaded to full capacity	Reduce pump capacity
		Setting of thermoexpan-sion valve incorrect	Readjust valve See valve instructions, included
		Compressor capacity diminished	See maintenance instruc-tion for compressor, included
	Scraper blades worn		Recondition blades. See IV-12
	Mix tempera-ture too high		Reduce mix temperature
	Refrigerant charge insufficient		Replenish refrigerant charge **Refrigerant type indica-tion is stated in refri-geration components IV-05** Refrigeration charge: See label attached to the condenser
	Freezing point of mix too low		

Overrun too low	Air pressure too low		Adjust airflow regulator/ Potentiometer
	Pump ratio not correct		Adjust pump ratio See IV-04 or contact **APV Technohoy**
	Finished product too cold or too warm		Try with different product outlet temperatures
	Lack of correct overrun additives		
Overrun too high	Air pressure too high		Adjust airflow regulator/ Potentiometer
	Air leaks in the mix line		See II-04
	Too much rework in the mix tank		Use only freshly prepared mix
Overrun unsteady	Air leaks in the mix line		See II-04
	Too much rework in the mix tank		Use only freshly prepared mix
Air slugs in the finished product	Too much rework in the mix tank		Use only freshly prepared mix
	Poor air holding ability of the mix		
	Entering mix too cold		
	Pump ratio not correct		Adjust pump ratio See IV-04 or contact **APV Technohoy**

PROGRAMME EXAMPLE	MF 100	III-08
	17	A

Stage	Approx. time min.	Approx. temp. oC
1. Pre-rinse with water. Outgoing water to drain.	7	10 - 15
2. Lye wash - 1% caustic soda solution with wetting agent and phosphate additives. Is returned to tank after use.	12	65 - 70
3. Hot water sterilisation. Water displaces lye and goes to drain after regenerative cooling.	12	90 - 95
4. Water goes to drain and graduate cooling.	--	---

The times mentioned above are normative and the programme is effective from a bacteriological point of view, but it does not prevent hard rinsing water from depositing lime salts.

These can be removed once or twice every season by means of acetic acid or citric acid (PH 3.5 - 4.5) according to the following procedure:

The freezer and the pumps are disassembled and the individual parts are washed in the above mentioned weak acid (max. 100 ppm), and are then immediately after carefully rinsed in clean, cold water and dried.

WARNING! **Do not use acidiferous or chlorine-containing detergent apart from the exception referred to.**

Chlorine pits and makes mutator and scraperblades rust and pits chrome!

Acid attacks chrome!

NOTE: **The warranty** on the freezer no longer applies if any damage caused by acid or chlorine cleaning materials are detected.

OVERRUN TABLE - Met. c

Weight in grams of Finished Product in various sized containers (x)			Overrun percent shown for various weights of Mix or Product Input (indicated in grams per liter) (x)			
1/4 Liter	1/2 Liter	1 Liter	1080 grams % overrun	1092 grams % overrun	1104 grams % overrun	1116 grams % overrun
120 gr	240 gr	480 gr	125 %	127 %	130 %	133 %
122 gr	243 gr	485 gr	122 %	125 %	127 %	130 %
123 gr	246 gr	492 gr	120 %	122 %	124 %	127 %
124 gr	249 gr	498 gr	117 %	119 %	121 %	124 %
126 gr	252 gr	504 gr	114 %	117%	119 %	121 %
128 gr	255 gr	510 gr	112 %	114 %	116 %	119 %
129 gr	258 gr	516 gr	110 %	112 %	114 %	116 %
130 gr	261 gr	522 gr	107 %	109 %	111 %	114 %
132 gr	264 gr	528 gr	105 %	106 %	109 %	111 %
134 gr	267 gr	534 gr	102 %	104 %	106 %	109 %
135 gr	270 gr	540 gr	100 %	102 %	104 %	107 %
136 gr	273 gr	546 gr	97 %	100 %	102 %	104 %
138 gr	276 gr	552 gr	96 %	98 %	100 %	102 %
139 gr	279 gr	558 gr	94 %	96 %	97 %	100 %
141 gr	282 gr	564 gr	91 %	94 %	95 %	98 %
143 gr	285 gr	570 gr	89 %	92 %	93 %	96 %
144 gr	288 gr	576 gr	88 %	90 %	91 %	94 %
146 gr	291 gr	582 gr	86 %	88 %	89 %	92 %
147 gr	294 gr	588 gr	84 %	86 %	87 %	90 %
148 gr	297 gr	594 gr	82 %	84 %	85 %	88 %
150 gr	300 gr	600 gr	80 %	82 %	84 %	86 %
151 gr	302 gr	604 gr	78 %	80 %	82 %	84 %
153 gr	306 gr	612 gr	76 %	78 %	80 %	82 %
154 gr	309 gr	618 gr	75 %	77 %	78 %	80 %
156 gr	312 gr	624 gr	73 %	75 %	76 %	79 %
157 gr	315 gr	630 gr	71 %	73 %	75 %	77 %
159 gr	318 gr	636 gr	70 %	72 %	73 %	75 %
160 gr	321 gr	642 gr	68 %	70 %	71 %	74 %
162 gr	324 gr	648 gr	67 %	68 %	70 %	72 %
164 gr	328 gr	654 gr	65 %	67 %	68 %	70 %
165 gr	330 gr	660 gr	64 %	65 %	67 %	69 %
166 gr	333 gr	666 gr	62 %	63 %	66 %	67 %

(x) Before calculating weights, make certain that weight of container is subtracted.

APV Technohoy

GUIDE FOR ADJUSTING AND READINGS OF APV TECHNOHOY MIXFLOW COMPUTER

COMPUTER SEEN FROM THE FRONT

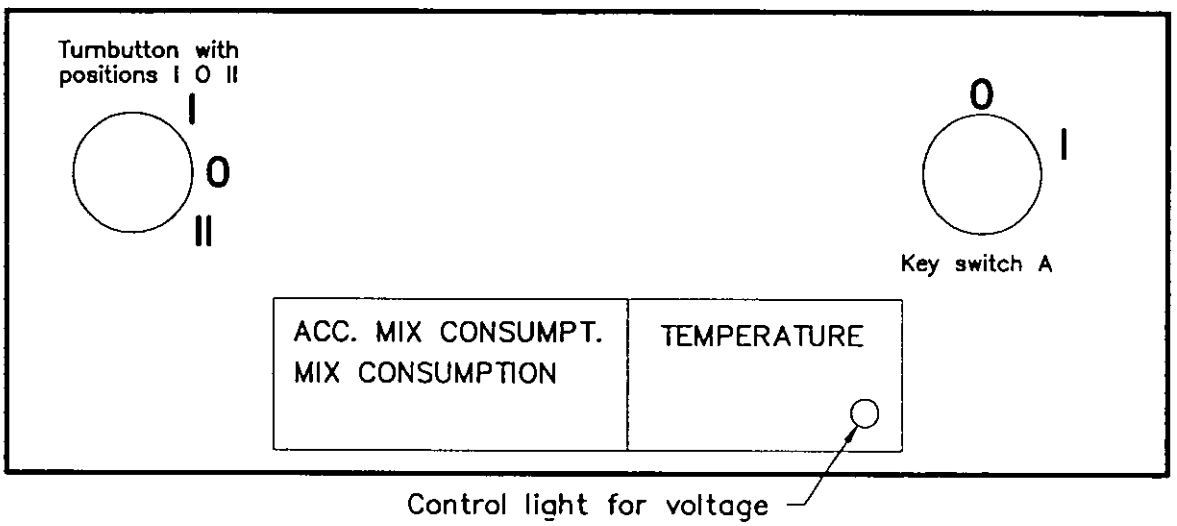

COMPUTER SEEN FROM BEHIND

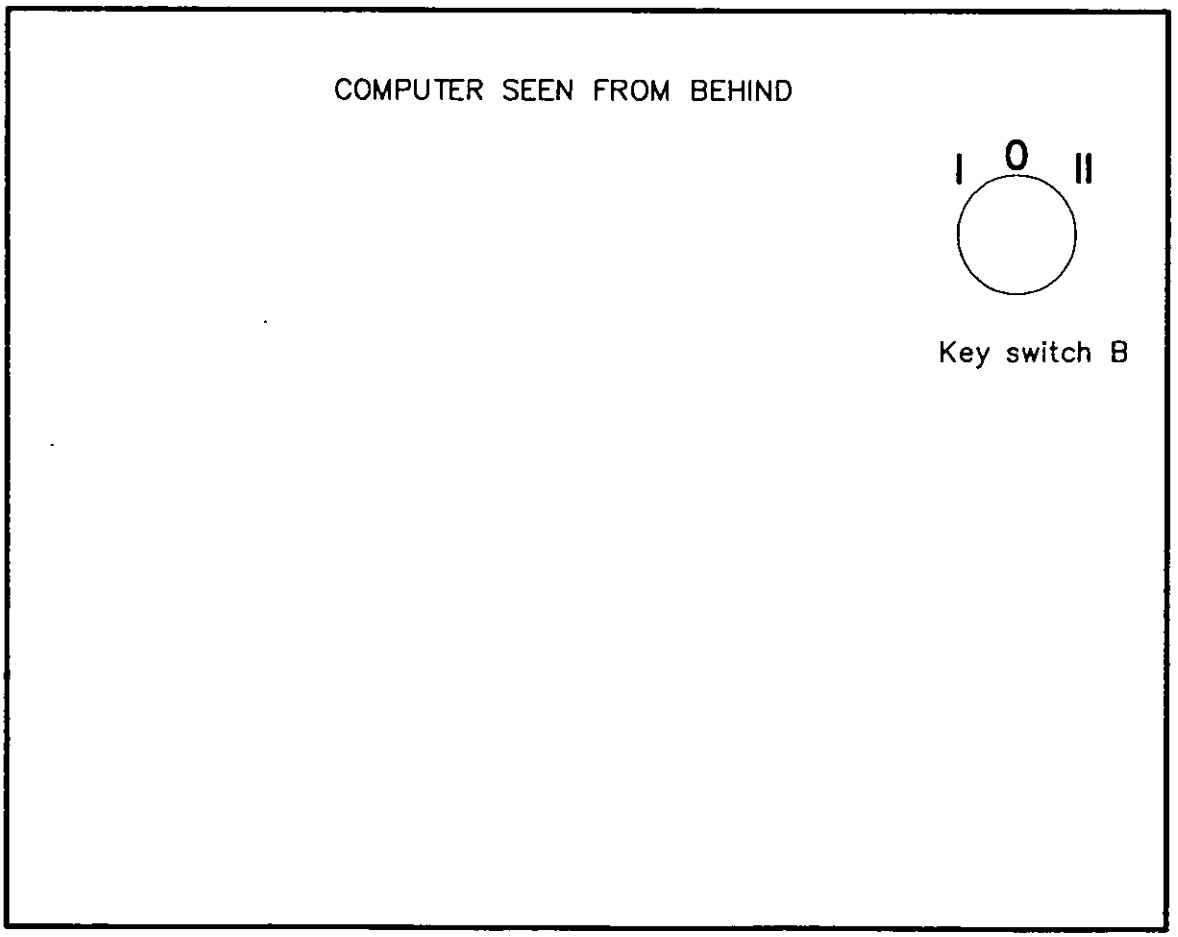

APV Technohoy

THE FUNCTION OF THE BUTTONS

TURNBUTTON WITH POSITIONS I - 0 - II

BY DAILY USE:

Position I: Displays the accumulated mix consumption in liters since last reset (Key switch A).

Position 0: Displays consumption of mix in Liter/Hour.

BY ADJUSTMENT:

Position I: Fast countingfunction (ascending or descending).

Position II: Slow countingfunction (ascending or descending).

KEY SWITCH A

BY NORMAL USE:

This switch is used to reset the readings of the accumulated consumption of mix.

BY ADJUSTMENT:

By adjustments, this key is used for changing the counting direction.

I - right: Counting ascending.

0 - left and
I - right again: Counting descending etc.

KEY SWITCH B

This switch is only activated by adjustments of the computer.

APV Technohoy

ADJUSTMENT OF THE MIXFLOW COMPUTER

The pumps are turned on, and by means of the pump speed regulator the pumps are brought to run by a arbitrary low speed.

A plastic hose is then connected to the mix tube by the T-piece, so that the mix is led through the hose instead of the freezing cylinder.

By means of accurate measuring glass, the amount of mix throughput, **in cm^3 per minute** is measured.

REMEMBER: that the pump speed, in this case, is arbitrary, but for practical reasons must be kept low.

The number of cm^3 that you now have noted, is the figure that the computer must be brought to display.

IMPORTANT: Do not change pump speed, until adjustment is completed.

No having the pumps running without mix proceed as follows:

The key switch B is turned in Position I (Display flashes).

On the display you now have a figure:
The turnbutton with positions I - 0 - II is turned in position I or II (fast or slow counting). The figure will now either turn ascending or turn descending, depending of the chosen counting direction, by means of key switch A.
If the counting direction is correct i.e you count towards the desired figure.

If the counting direction is wrong, this is changed by means of key switch A. You turn switch A in pos. 0 (left) and thereafter in pos. I (right), and counting direction is changed.

When the counter on the display shows exactly the desired (measured) number, turn key switch B off.

Now the adjustment is completed, and the figure in:

cm^3/min is translated to liter/hour.

DIGITAL THERMOMETER

The digital thermometer is adjusted by comparing it to a reference thermometer of a known liability. This is done in an icewater solution at 0° C. The display must at this temperature show **0.0° C.**

BY ADJUSTMENT:

The key switch B is turned in Position II (Display flashes).

On the display you now have a figure:
The turnbutton with positions I - 0 - II is turned in position I or II (slow or fast counting). The figure will now either turn ascending or turn descending, depending of the chosen counting direction, by means of key switch A.
If the counting direction is correct i.e you count towards the desired figure.

If the counting direction is wrong, this is changed by means of key switch A. You turn switch A in pos. 0 (left) and thereafter in pos. I (right), and counting direction is changed.

When the counter on the display shows exactly the desired (measured) number, turn key switch B off. Now the adjustment is completed.

IMPORTANT: **If the main power switch of the Freezer is disconnected, the built-in battery back up will keep the memory for app. one year.**

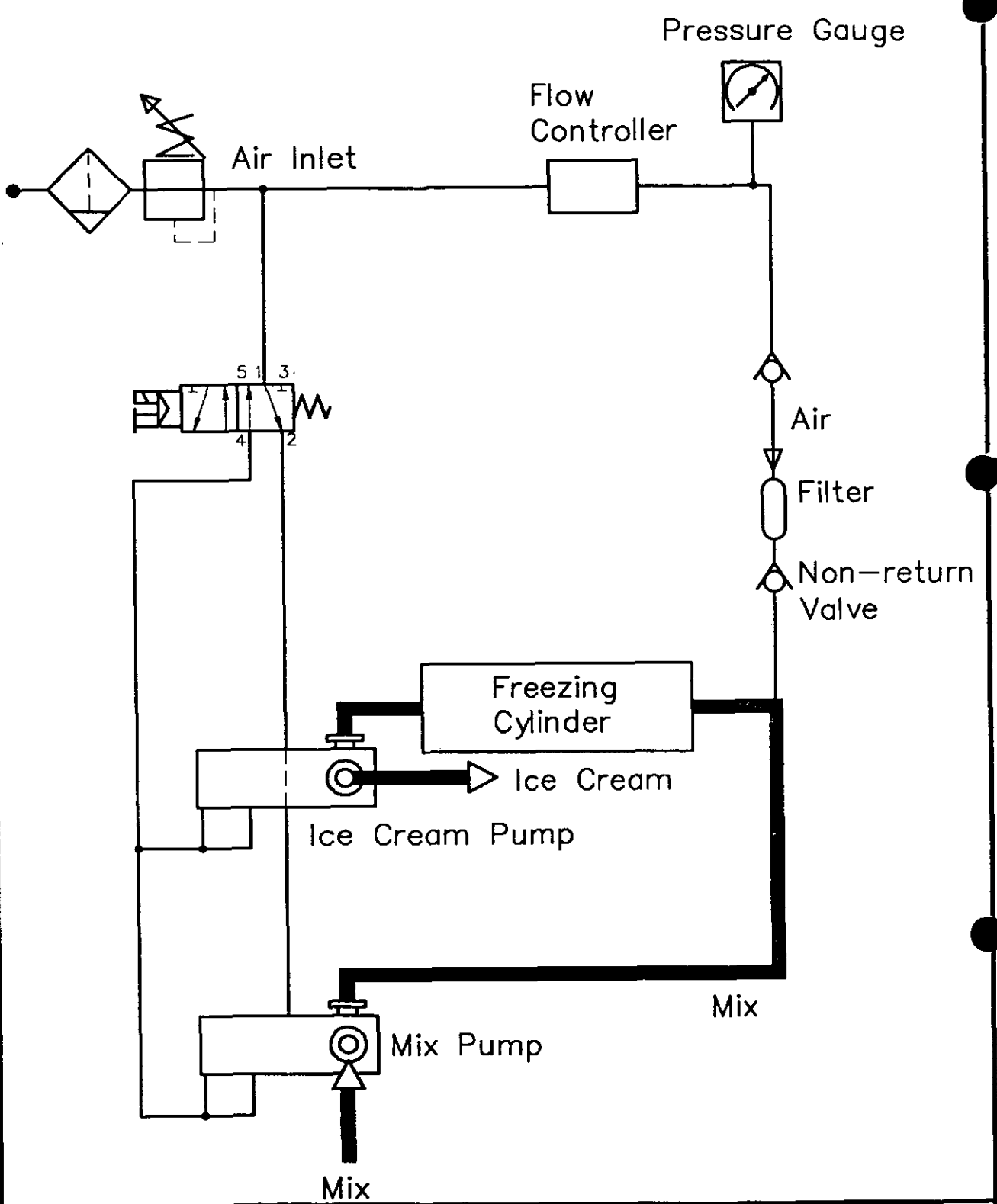

Tolerancer ifølge DS 2075, hvor intet andet er angivet.	Antal	Styklistenr.	Maskine	Evt. bem.

Afkortningsmål:	
Antal	Dimension

TECHNOHOY
CARL HOYER A/S AARHUS – DENMARK

Icecream/Air System

Materiale | Maskintype MF100L

Skala	Tegn.	sc
1:1	Dato	10.12.93

D25942

THE ICE CREAM- AND AIR SYSTEM

The APV Technohoy freezers are continuous freezers which means that they, unlike batch freezers have two pumps to supply a continuous and constant flow of ice cream mix to the freezer and to meter the finished product out of the freezer. The air, necessary to obtain the desired overrun, is fed to the inlet end of the freezing cylinder, together with the ice cream mix.

DRAWING D 25942

The flow sheet shows the ice cream- and air-system.

Mix from the supply tank is taken by the mix pump and is pumped to the inlet end of the freezing cylinder.

A digital flowmeter measures the flow of air mixed into the ice cream mix.

The air passes a filter and a non-return valve, and is mixed into the ice cream mix.

In the freezing cylinder air and mix are whipped thoroughly together by the action of the mutator, to form an emulsion with finely divided air bubbles. Simultaneously the mix is cooled down and partly frozen by the contact with the refrigerated cylinder wall. The mutator, which rotates in the cylinder, at a comparatively high speed, serves two purposes. First it performs the just mentioned whipping. Secondly it constantly scrapes off the ice cream, which freezes on to the cylinder wall.

For this purpose the mutator is equipped with a set of two scraper blades, hinged in such a way that they can swing out and contact the cylinder wall under the influence of centrifugal force.

The freezing tube is hard chromium plated on the interior surface, to minimize wear of the scrapers.

The finished product passes to the ice cream pump and to the outlet.

Control of overrun is accomplished as an interplay between the capacities of the mix pump, the ice cream pump and the air pressure, as set by the airflow regulator/potentiometer. It is obvious, that the ice cream pump must have a higher capacity than the mix pump. The difference in capacity is made up for by the air, the volume of which is reduced because of the prevailing pressure.

After passage of the ice cream pump the air in the product re-expands to normal volume and gives the product the desired overrun, provided that the air pressure and the difference in pump capacities, pump ratio, were right. These are the two factors by which the overrun can be controlled.

Del af _____ Type _____

Firma:

Technohoy
CIVILINGENIØR O·G·HØYER
AARHUS · DANMARK

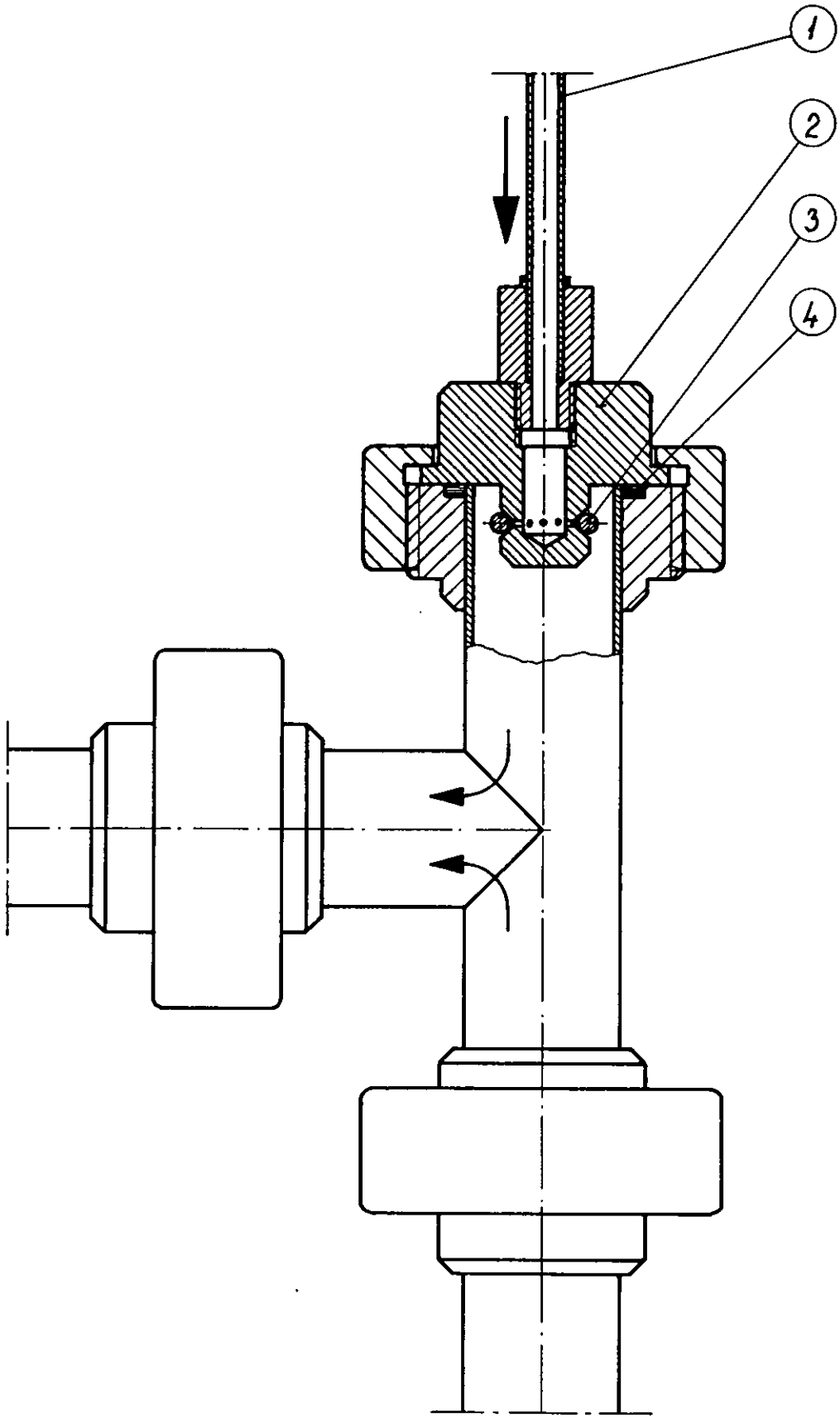

Alle mål uden tolerance ± mm

	Materiale	Model nr.	Lager nr.	Målforhold	Tegn.	78.06.15.
				1:1	Kont.	R
	Genstand: T-stykke m/kontraventil.			Tg. nr. D 3141		

HM (09) 16 27 27

NON-RETURN VALVE
DRAWING D 3141

The drawing shows a section through the non-return valve, which is placed in the top of the sanitary tee in the mix pipe from the mix pump.

Air under constant pressure enters the valve body 2 through the tube 1, the other end of which is connected to the air control system. The valve body 2 carries an O-ring 3 in a V-grove, the bottom of which is connected to the inlet port of the valve body through a number of radial holes. The valve body is sealed against the nipple by means of a sealing ring 4.

It takes about 0.5 to 1 bar air pressure to lift the O-ring 3 from the seat and thereby to open the valve.

THE ACTUAL PRESSURE IN THE FREEZING CYLINDER IS THEREFORE 0.5 TO 1 BAR LOWER THAN THE VALUE SHOWN BY THE AIR PRESSURE GAUGE.

MAINTENANCE

IT IS VERY IMPORTANT, that the two rings 3 and 4 are in perfect condition to avoid counter flow through the valve. For the same reason the valve should be kept clean.

PUMPS

Both pumps, for ice cream mix and ice cream respectively, are TP gear pumps.

Please see the following drawings.

TP 1	Mixpump -	Drawing	C 21527
TP 1	Bracket for pump -	"	C 21645
TP 2	Ice cream pump -	Drawing	C 21528
TP 2	Bracket for pump -	"	C 21644

C.I.P.
(CLEANING-IN-PLACE)

When cleaning, place the pumps in C.I.P. position. Pos. 3 on drawing U 25819. Yellow signal lights up.

ADJUSTING OF PUMP RATIO

The accurate value of the pump ratio is depending of the recipe of the mix, pressure in the freezing tube, and conditions of the pumps.

The pump ratio can be adjusted by means of exchanging the chain wheels of the pumps.

When the pump ratio is correctly adjusted, further adjustments are unnecessary.

In case of problems with the pump ratio - please contact APV Technohoy.

PUMP DRIVE

It is important that the chain drive is always well adjusted.

The adjustment is to be made by the chain adjuster, and is always to be done after lubrication, because the oil film in the chain links will make the chain drive tighter.

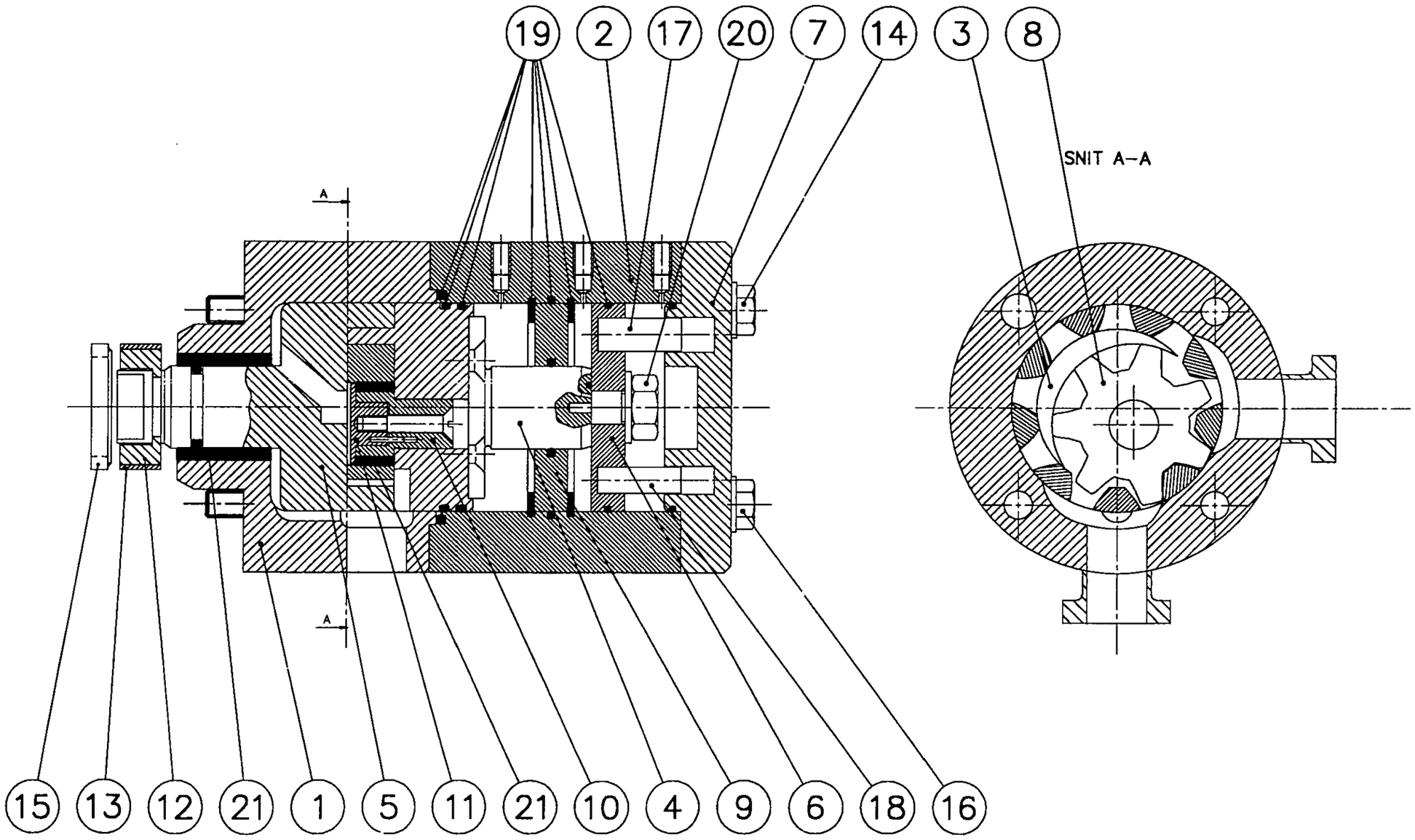

TECHNOHOY CARL HOYER A/S AARHUS – DENMARK	Skala	Tegn.	JS
		Dato	24.11.92
Reservedelstg. TP1 Spare parts drawing for pumps TP1 Ersatzteilzeichnung uber Pumpen TP1 Plan des pieces detachees des pompes TP1		C 21527	

APV Technohoy

TP 1 PUMP C 21527

POS.NO.:	DESIGNATION:	NUMBER:
1.	Pump housing	1
2.	CIP-cylinder	1
3.	Crescent-shaped insertion	1
4.	Guide	1
5.	Impeller	1
6.	Piston	1
7.	End cover	1
8.	Star wheel	1
9.	Dividing plate	1
10.	Shaft	1
11.	Lock-nut	1
12.	Cup-shaped locking device - 1 set = 2 pcs.	1 set
13.	Fitted ring	1
14.	Bolt	3
15.	Clearance feeler	1
16.	Bolt - large	1
17.	Guide pin - ø10	1
18.	Guide pin - ø8	1
19.	Set of gaskets	1 set
	- Comprises: 9 O-rings	
	2 Seeger rings	
20.	Set of bearings	1 set
	- Comprises: 2 Carbon bearing bushes	
	1 Tool	

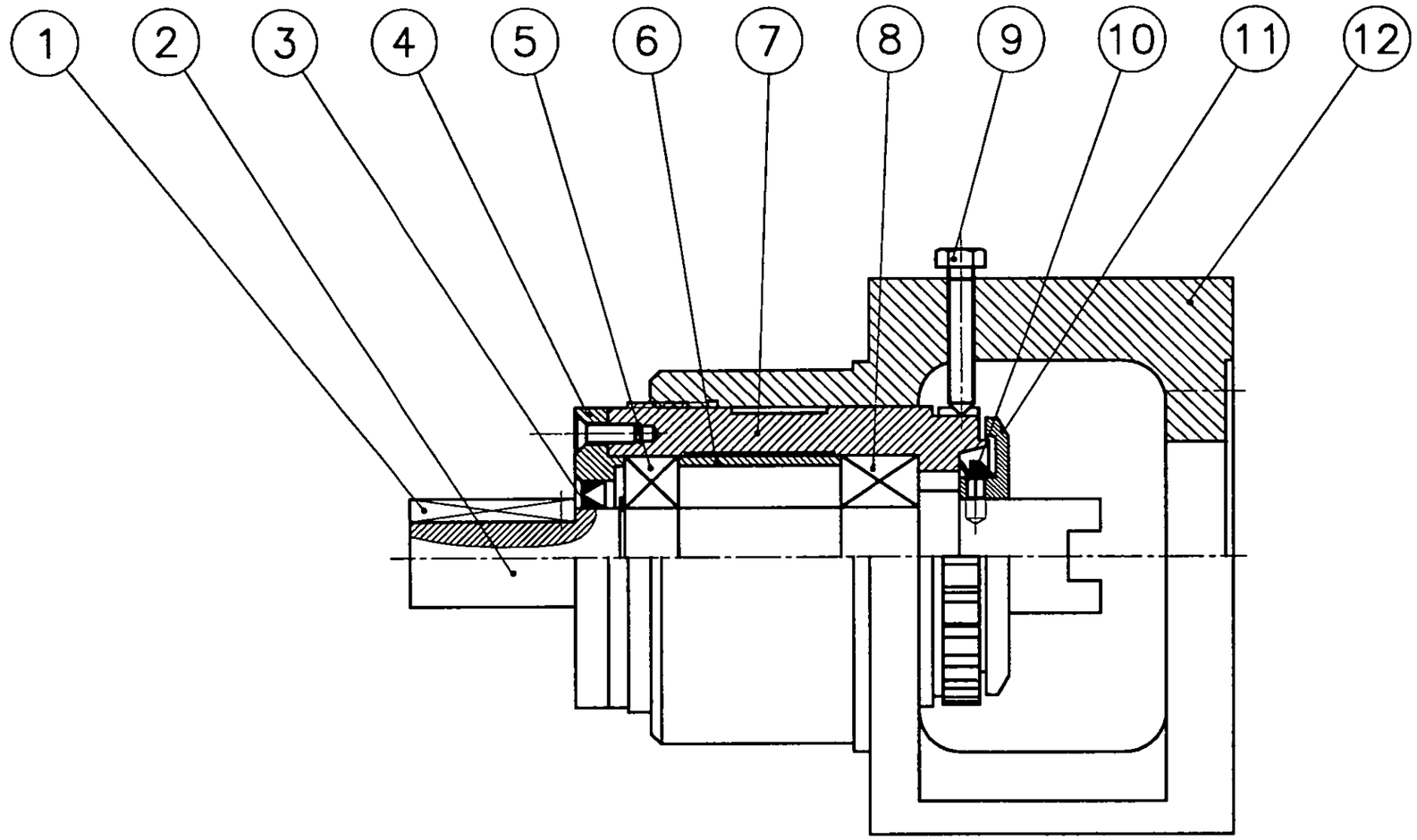

TECHNOHOY CARL HOYER A/S AARHUS – DENMARK	Skala	Tegn.	JS
		Dato	2.12.92
Reservedele Konsol TP1 Spare parts Bracket TP1 Ersatzteile Konsole TP1 Pieces detachees Console TP1		C 21645	

APV Technohoy

TP 1 BRACKET FOR PUMP C 21645

POS.NO.:	DESIGNATION:	NUMBER:
1.	Parallel key	1
2.	Shaft	1
3.	Oil sealing ring	1
4.	Bearing cover	1
5.	Ball bearing	1
6.	Distance ring	1
7.	Bearing housing	1
8.	Ball bearing	1
9.	Locking screw	1
10.	Sealing ring	1
11.	Cover	1
12.	Bracket	1

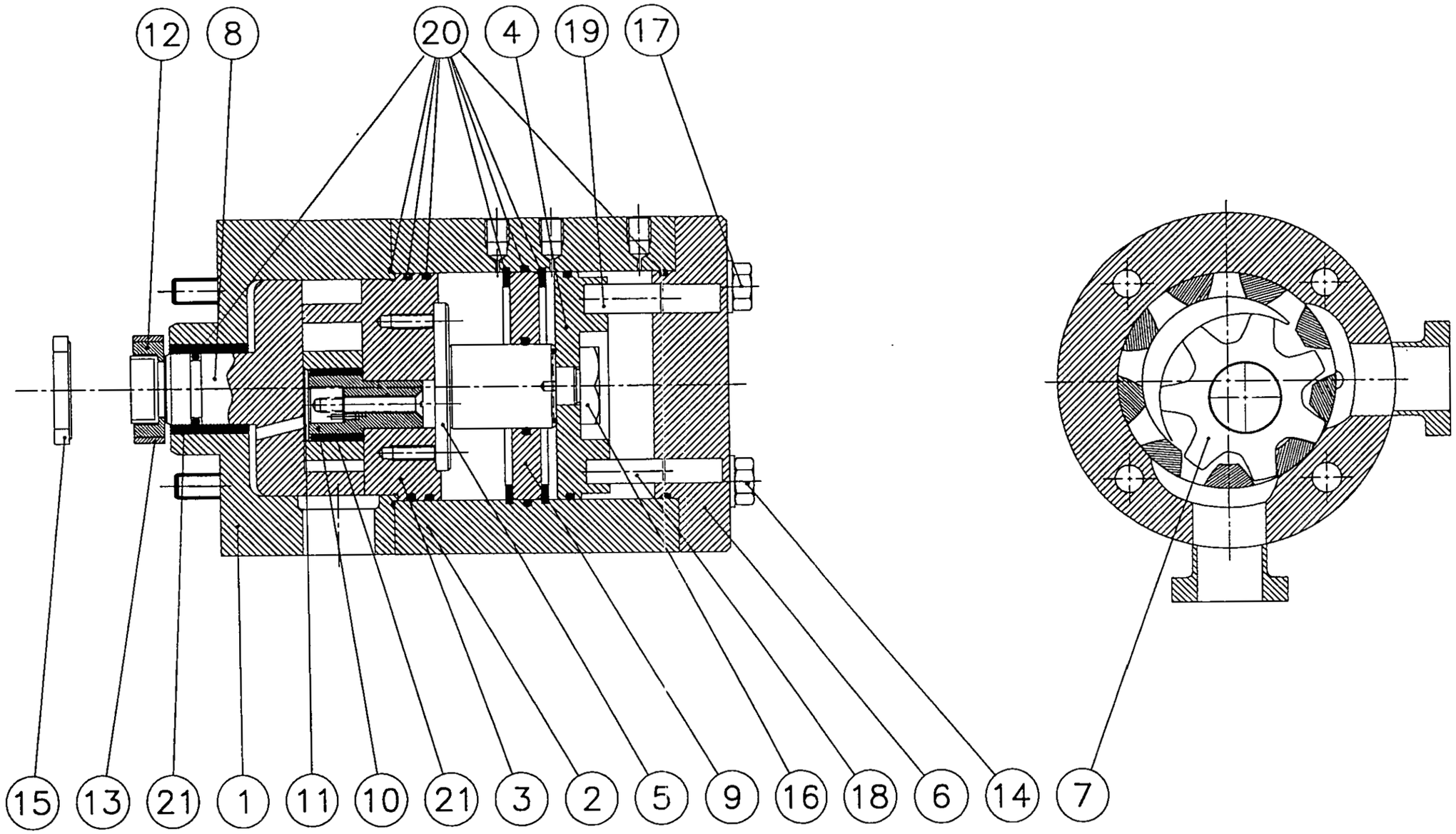

When you order a set of gaskets you will receive all 9 o-rings, 2 carbon bushes, 2 seegerrings and 1 toll.

These parts are packed i a bag.

TECHNOHOY CARL HOYER A/S AARHUS – DENMARK	Skala	Tegn.	JS
		Dato	24.11.92
Reservedelstg. pumpe TP2 Spare parts drawing for pumps TP2 Ersatzteilzeichnung uber Pumpen TP2 Plan des pieces detachees des pompes TP2		C 21528	

APV Technohoy

TP 2 PUMP C 21528

POS.NO.:	DESIGNATION:	NUMBER:
1.	Pump housing	1
2.	CIP-cylinder	1
3.	Crescent-shaped insertion	1
4.	Piston	1
5.	Guide	1
6.	End cover	1
7.	Star wheel	1
8.	Impeller	1
9.	Dividing plate	1
10.	Shaft	1
11.	Lock-nut	1
12.	Cup-shaped locking device - 1 set = 2 pcs.	1 set
13.	Fitted ring	1
14.	Bolt	3
15.	Clearance feeler	1
16.	Nut	1
17.	Bolt - large	1
18.	Guide pin - ø10	1
19.	Guide pin - ø12	1
20.	Set of gaskets	1 set
	- Comprises: 9 O-rings	
	2 Seeger rings	
21.	Set of bearings	1 set
	- Comprises: 2 Carbon bearing bushes	
	1 Tool	

PACKED IN ONE BAG

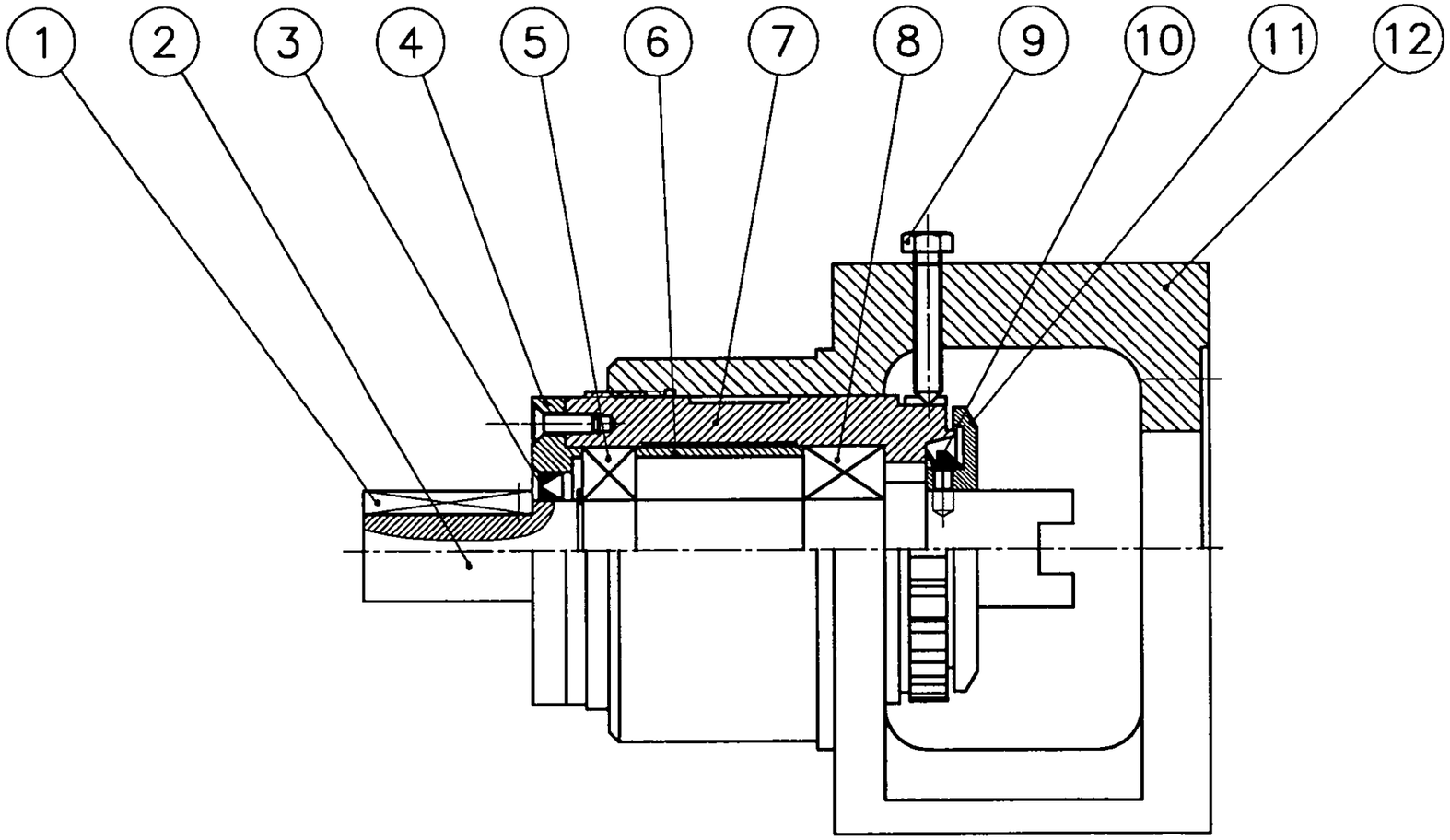

TECHNOHOY CARL HOYER A/S AARHUS – DENMARK	Skala	Tegn.	JS
		Dato	2.12.92
Reservedele Konsol TP2 Spare parts Bracket TP2 Ersatzteile Konsole TP2 Pieces detachees Console TP2		C 21644	

APV Technohoy

TP 2 BRACKET FOR PUMP C 21644

POS.NO.:	DESIGNATION:	NUMBER:
1.	Parallel key	1
2.	Shaft	1
3.	Oil sealing ring	1
4.	Bearing cover	1
5.	Ball bearing	1
6.	Distance ring	1
7.	Bearing housing	1
8.	Ball bearing	1
9.	Locking screw	1
10.	Sealing ring	1
11.	Cover	1
12.	Bracket	1

APV Technohoy

MF 100, No. L12

REFRIGERATION COMPONENTS for Diagram D17002

1	Compressor	Pos.	1	Bitzer BHS 4N-12.2
1	Evaporator	Pos.	2	Technohoy
1	Condenser	Pos.	3	Roller B6
1	Solenoid Valve	Pos.	4	Danfoss EVR 10
1	Heat Exchanger	Pos.	5	Searle 500-XS
1	Suction Accumulator	Pos.	6	ACER HX 3836
1	Back press.regulator	Pos.	7	Danfoss PM1-25 + CVP
1	Oil Separator	Pos.	8	ACER S 5588
1	Pressure control	Pos.	9	Danfoss KP 5
1	Sight glass	Pos.	10	ALCO AMI 1MM 5
1	Thermovalve	Pos.	11	Danfoss TEX 5
1	Closing Valve (Freon)	Pos.	12	Danfoss BML 10
1	Solenoid Valve	Pos.	13	Lucifer 121 K 03
1	Filter	Pos.	14	Danfoss DX 305
1	Water regulat. valve	Pos.	15	Danfoss WVFX 25
1	Pressure gauge	Pos.	16	Tempress R 22
1	Sight glass	Pos.	17	Danfoss SGI 6
1	Differ. Pressure Contr.	Pos.	18	Danfoss MP 54
1	Sight glass	Pos.	19	Danfoss SGI 6
1	Pressure gauge HP	Pos.	HP	Tempress R 22
1	Pressure gauge LP	Pos.	LP	Tempress R 22

Refrigerant: Freon R 22

The Condenser Pos. 3 carries a label indicating the Freon charge.

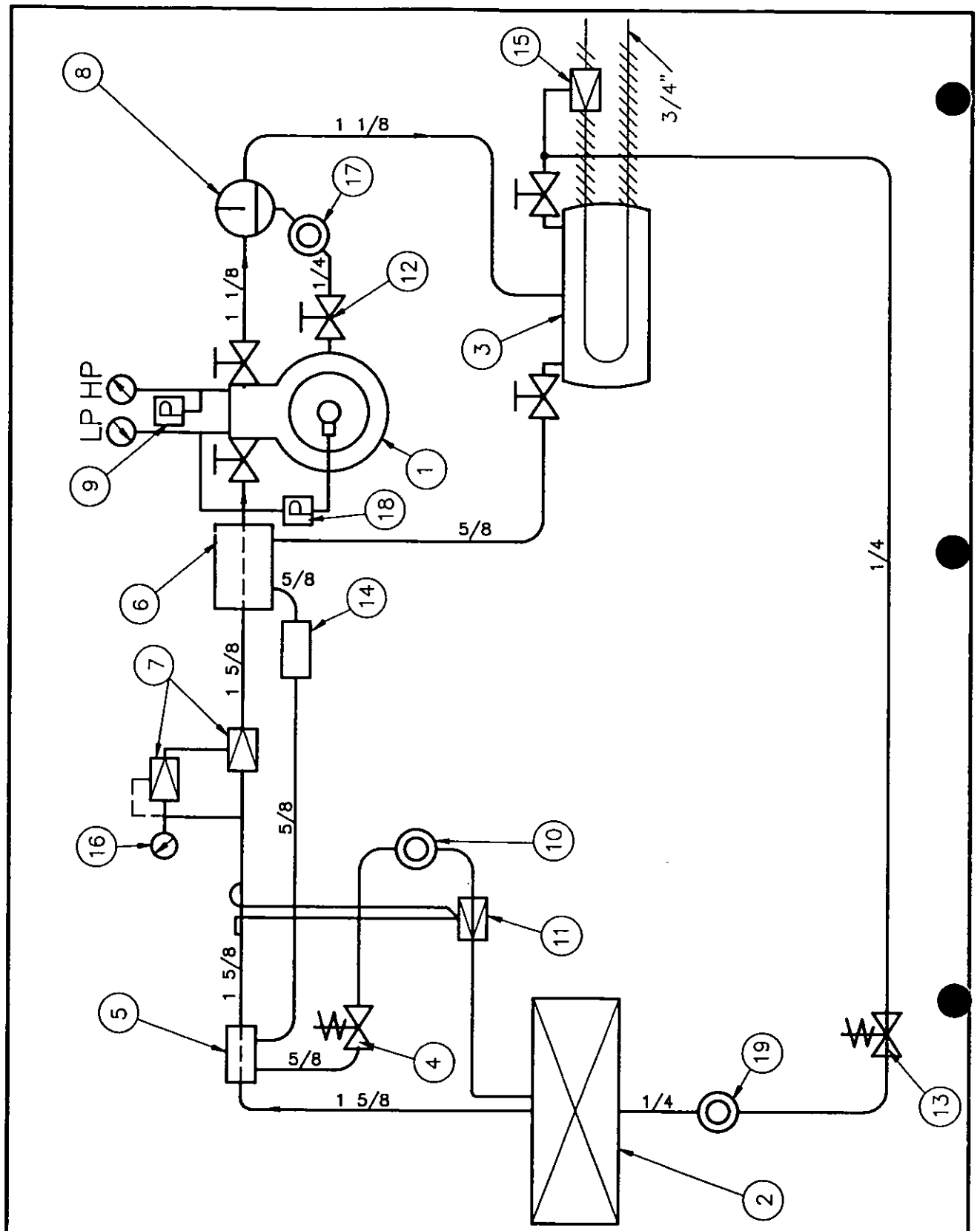

Tolerancer ifølge DS 2075, hvor intet andet er angivet.	Antal	Stykliste nr.	Maskine	Evt. bem.

Afkortningsmål:	
Antal	Dimension

TECHNOHOY

CARL HOYER A/S AARHUS – DENMARK

R22 Diagram

Skala	Tegn.	sc
1:1	Dato	91.01.15

Materiale

Maskintype MF

D17002

THE REFRIGERATING SYSTEM
DRAWING D 17002

The suction side of the refrigerating compressor 1 is connected to the top of the freezing jacket 2 surrounding the freezing cylinder. The suction line passes through the heat exchanger 5, the back pressure regulator 7, and the suction accumulator 6. The oil separator 8 brings back the oil from the discharge line to the compressor, where it belongs. The sight glass 17 gives a clear visual indication of the function of this system. In this way the jacket 2 is kept practically free of oil, which is of utmost importance to maintain best possible freezing capacity.

The discharge side of the compressor is connected to a condenser 3. In the condenser the condensing heat is transferred to the cooling water, the amount of which is controlled by the automatic water regulating valve 15. From the condenser the now liquified refrigerant R 22 flows through the liquid line with a filter 14, through the heat exchanger 5, and the suction accumulator 6, in counterflow to the R 22 gas in the suction line, through the solenoid valve 4, a sight glass 10, to the thermovalve 11, the bulb of which is clamped to the suction line. The suction line between 2 and 5 will carry a mixture of R 22 gas and liquid. In the liquid will be dissolved some oil, originating from the compressor, from which it has been carried to the evaporator through condenser and liquid line.

In the heat exchanger 5 the liquid part of the R 22 is evaporated by means of heat from the counterflowing warm liquid.

The purpose of the suction accumulator 6 is to afterevaporate traces of liquid Freon after the first heat exchanger.

The purpose of the automatic but adjustable valve 7 is to keep a constant pressure, and thereby also a constant temperature in the jacket 2. This pressure which is shown by the square pressure gauge 16, must by necessity, be higher than the pressure in the suction port of the compressor, which is shown by the pressure gauge LP.

The pressure difference is created by the throlling action of the valve 7. When the freezer is working at low capacity the valve 7 is adjusted to keep a relatively high pressure in the jacket 2, while at the same time the compressor is able to pull the pressure after the valve 7 down to a relatively low value. The pressure difference between 16 and LP is then large. If now the refrigerating load is increased by increasing the throughput and the stiffnes of the product, the back pressure regulating valve 7 must be adjusted to keep a lower pressure and temperature in the jacket 2. The throttling action is reduced and the pressure at LP rises. The pressure difference between 16 and LP is then low.

By further increasing and refrigerating load, the pressure difference reaches a minimum. The valve 7 is then wide open, and the limit of the compressor capacity has been reached. It is evident, that the mentioned pressure difference is a good measure for the load of the refrigerating system.

HP is a pressure gauge showing the condensing pressure and temperature. In principle this pressure should be kept as low as possible to obtain highest possible refrigerating capacity, lowest possible consumption of electricity and lowest possible discharge temperature of the compressor. This advantage must be paid for by a high consumption of cooling water however. 15 is an automatic water regulating valve, placed in the water inlet to the condenser. It has a pressure sensitive element which is connected to the discharge port of the compressor. The element has the function to open the valve, when pressure is build up, and let so much water flow through the condenser as necessary to keep the condensing pressure at the value which is preset by the adjustment knob of the water valve. When making adjustments of the water flow, the effect should be followed on the gauge HP. From the factory the valve is set to keep the condensing temperature at about 30°C. It depends very much on local conditions however, to which condensing temperature the water valve should be set. If water is plentiful, cheap and perhaps warm, much water should be used and vice versa.

THE COOLING COMPRESSOR IS STOPPED

Pos. 18 is an oil pressure differential pressure control with thermal timing relay. In case the oil pressure at the start-up is not sufficient, or in case the oil pressure during production falls under the set point, then the compressor will stop after the delay period.

Before you turn on the compressor again, please see the enclosed instructions for:
Danfoss MP-OIL PRESSURE-DIFFERENTIAL PRESSURE CONTROL.

THE FREEZING CYLINDER ASSEMBLY AND MAIN DRIVE DRAWING U 7887

SOLID MUTATOR

The freezing tube 8, made of stainless steel and hard chromium plated on the interior surface, is surrounded by the eccentrically placed jacket 7 with heads 7a and 7b.
The annular space so formed is the evaporator for Freon, which cools the freezing tube. Tightness between the heads and the freezing tube is obtained by O-rings 6 and 9. Covers 1 and 12 are attached to the ends of the freezing tube by bayonet style locks. 44 is the inlet connection for ice cream mix with air, and 45 is the outlet connection for the finished product. Centrally placed in the cylinder is the solid mutator 30 suspended between the anchor plate 2 and the driving plate 18. The torque from the main shaft is transmitted to the mutator shaft 30a through the driving plate 18. The right end of the mutator, the shaft 30a is sealed against the cover 12 by means of the rotary shaft seal 13 and engaged with the main shaft 41. The V-belt pulley 46, is secured to the main shaft by the taper lock bushing 47. The main shaft is suspended in two ball bearings 39 and 21. The first mentioned, being the heavier, is designed to take the axial thrust from the internal pressure in the freezing tube.

MAINTENANCE U 7887

The freezing tube 8 is removable. If the tube needs to be replaced, or for other reasons taken out of the freezer, the low side of the refrigerating system must be pumped down. This should be done by a competent refrigerating service engineer, NEVER by an unexperienced person. Remove the cover 1 and the union nut 4 with the multi-tool delivered with the freezer. Also remove the cover 12 and the mutator assembly, by hand. The freezing tube can then be pulled out. When reinstalling the tube make sure, that everything is clean, and that the O-rings are of proper quality for use in connection with Freon, and that they are properly oiled with refrigerating compressor oil and that the dowel pin 5 is exactly opposite its slot. Loosen the expansion ring 10, if necessary. Then drive home the tube with a wooden block and a bench hammer. Tighten the union nut 4 firmly. Tighten the screws 31 evenly but not too firmly. Check for leaks with a halide leak detector, electric type.

If, after considerable use, the shaft seal 13 gets leaky inspect the running surfaces of the seal rings. Also inspect the two O-rings. It is important, that the spring is able to push the rotating seal ring on the shaft, if compressed. The shaft should therefor be lubricated occasionally with an edible lubricant.

If any part of the shaft seal gets scored, the entire shaft seal must be replaced with a new one.

Power from the main motor is transmitted to the main shaft through a V-belt. If it ever becomes necessary to replace the V-belt, proceed as follows : Remove the V-belt from its groove. Remove the screws 48 and 49. Remove the ball bearing house 22. The old belt can now be slipped over the end of the shaft and out, and the new belt can be inserted the same way.

If it, for some reason, is necessary to remove the main shaft 41, further remove the 4 screws 50, and the main shaft nose 35, which is fastened to the shaft with right hand thread. Loosen the taper lock in the main V-belt pulley. Remove the ball bearing 21. The cover 19 and the taper lock can now be taken out, and the shaft can be moved to the right. Now lift the left end of the shaft up and take the shaft out of the machine. It is now possible to renew the ball bearing 39 and the seal rings 16, 36, 37 and 40.

RECONDITIONING OF WORN SCRAPER BLADES DRAWING D 3140

The drawing shows, at A, a section through the freezing cylinder, with mutator and scraper blades. The mutator turns anti-clockwise, when seen from the front of the freezer. The leading edge of the blades must be in contact with the refrigerated cylinder wall, by centrifugal force, and when in proper condition, they scrape off the thin layer of ice cream which freezes on to the cylinder wall between passages of the scrapers. It is evident, that the blades must be kept in good condition in order to scrape off efficiently, which is of so deciding importance for the performance of the freezer.

At 1 is shown a new and unused blade. It has a rather sharp cutting edge. 2 shows the blade after some use. The blade is "worn-in" against the cylinder surface. A narrow contact area has developed over the entire lenght of the blade. After considerable use this contact face gets so wide, say 1,5 mm, that reconditioning becomes necessary, in order to maintain scraping efficiency. At 3 is shown how to proceed. Put the blade in a vise and use a saw mill file to remove material from the edge as shown. The file should be held at approximately 90 to the contact face. Continue filling till the width of the face has been reduced to between 0.4 and 0.6 mm. Such a small portion should be left over to insure good contact between blade and cylinder wall. NEVER remove the face completely.

APV Technohoy

MF 100L	FREEZING SYSTEM	U 7887

POS. NO.:	DESCRIPTION:	NUMBER:
1.	Cap	1
2.	Hub	1
3.	O-ring	1
4.	Union nut	1
5.	Pin	1
6.	O-ring	2
7.	Evaporating system	1
8.	Freezing cylinder	1
9.	O-ring	2
10.	Expansion ring	1
11.	O-ring	1
12.	Cap	1
13.	Stuffing box	1
14.	Cap	1
15.	Flange	1
16.	Seal ring	1
17.	Seal ring	1
18.	Feather	1
19.	Flange	1
20.	Seal ring	1
21.	Ball bearing	1
22.	Bearing cap	1
23.	Seegerring	1
24.	Pipe	1
25.	O-ring	1
26.	Front bearing	1
28.	Scraper blades	2
29.	Screw	8
30.	Dasher	1
31.	Screw	8
35.	Speciel nut	1
36.	V-ring	1
37.	Seal ring	1

APV Technohoy

MF 100L	FREEZING SYSTEM	U 7887

POS. NO.:	DESCRIPTION:	NUMBER:
38.	Seegerring	1
39.	Ball bearing	1
40.	O-ring	1
41.	Main shaft	1
46.	V-belt sheave	1
47.	Taper lock	1
48.	Screw	4
49.	Screw	6
50.	Screw	4

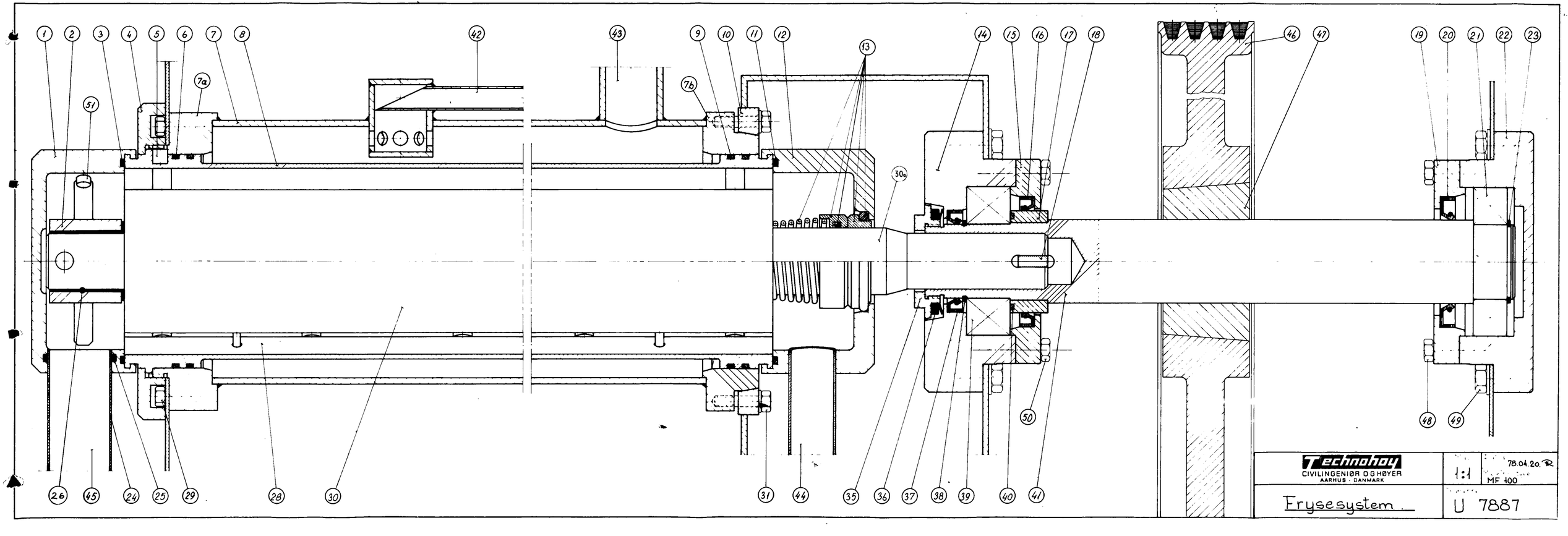
1
2
3
4
5
6
7
8
42
43
9
10
11
12
13
14
15
16
17
18
46
47
19
20
21
22
23
51
7a
7b
30a
26
45
24
25
29
28
30
31
44
35
36
37
38
39
40
41
50
48
49
Technohoy
CIVILINGENIØR O.G HØYER
AARHUS - DANMARK
1:1
78.04.20.
MF 100
Frysesystem
U 7887

Del af _____ Type _____

Technohoy
CIVILINGENIØR O·G·HØYER
AARHUS · DANMARK

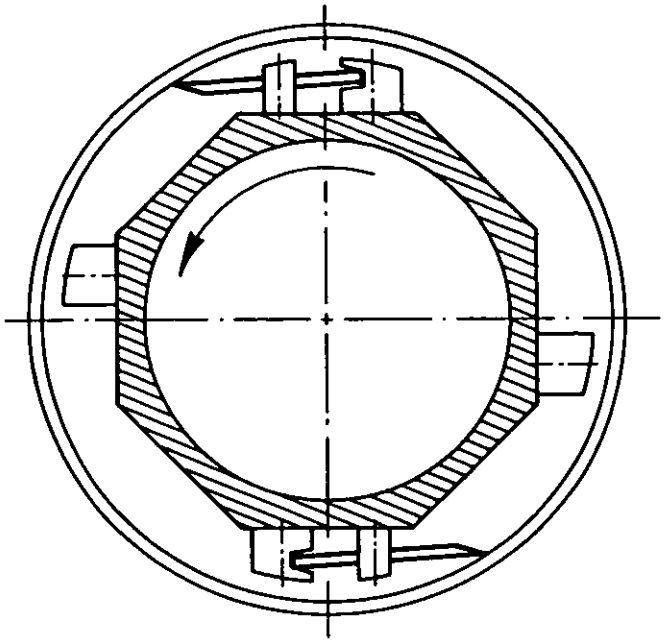

A

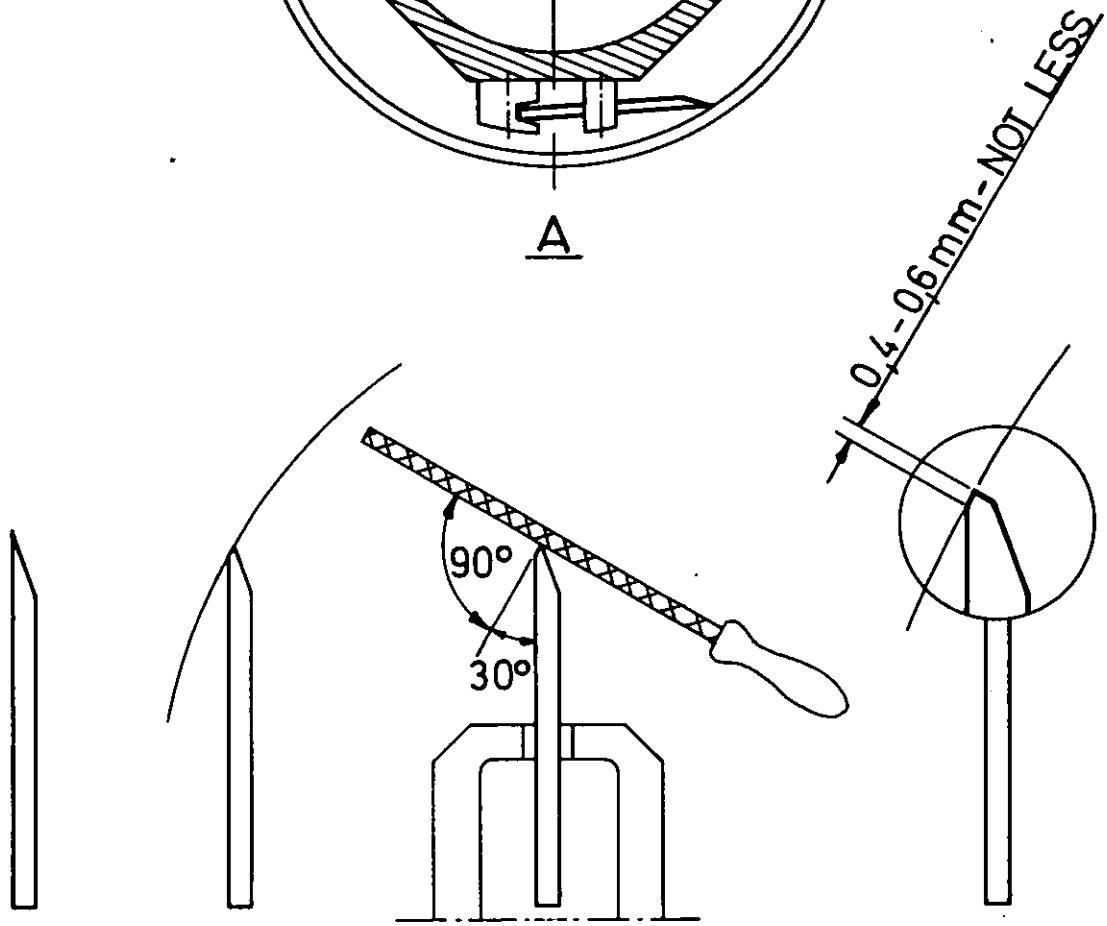

NEW WORN-IN RECONDITIONING READY FOR USE

Alle mål uden tolerance ± mm

erst. af D4058	Materiale	Model nr.	Lager nr.	Målforhold	Tegn.	78.06.08.
					Kont.	AR
	Genstand: RECONDITIONING WORN SCRAPER BLADES				Tg. nr.	D 3140

HM (09) 16 27 27

THE ELECTRICAL INSTALLATION DIAGRAM D 25737 1-9

The drawing is made in accordance with international standard and practise.

The wirings for the pump motor and the main driving motor are straight forward.

The compressor motor is equipped with a local protection system against overload and burn out. Thermistor temperature sensors are placed in the motor windings.

SEE WIRING DIAGRAM!

If the allowed temperature of the windings is exeeded, the electrical resistance in the sensors rises abruptly, which causes a relay in the control box to break the connection, where by the compressor motor is stopped through the motor contactor. A new start can normally be made after 5-6 minutes.

The heating element, if any, is located in the crank case of the compressor, immersed in the oil. Electrically it is connected in such a way, that it is on, when the motor is off and vice versa. This is done to avoid absorption of Freon in the oil during stand still periods of the compressor. Even during long periods of standstill, there is no danger of superheating of the oil because of the small heating capacity.

A consequence of the above is, that the main switch on the wall should NEVER be pulled, OR you can switch on the freezer app. 3-8 hours before production.

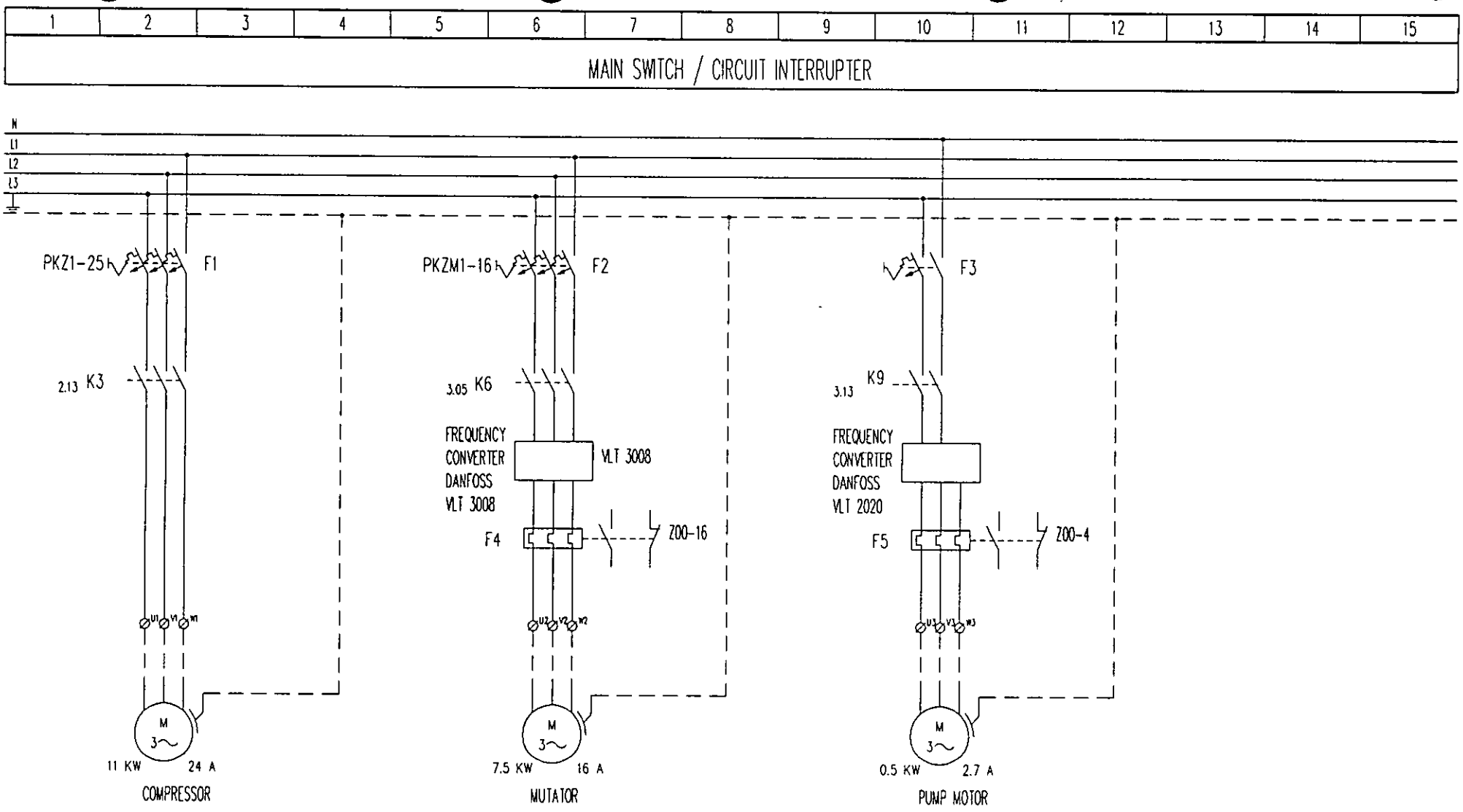

Firma	Dato	Navn	El diagram	Side
APV TECHNOHOY	19.11.93.	NS	MF 100 NO. L12	1
Reference	Rev. dato	Diagram nr.		
CARACOEIJS	17.03.94	D25737		

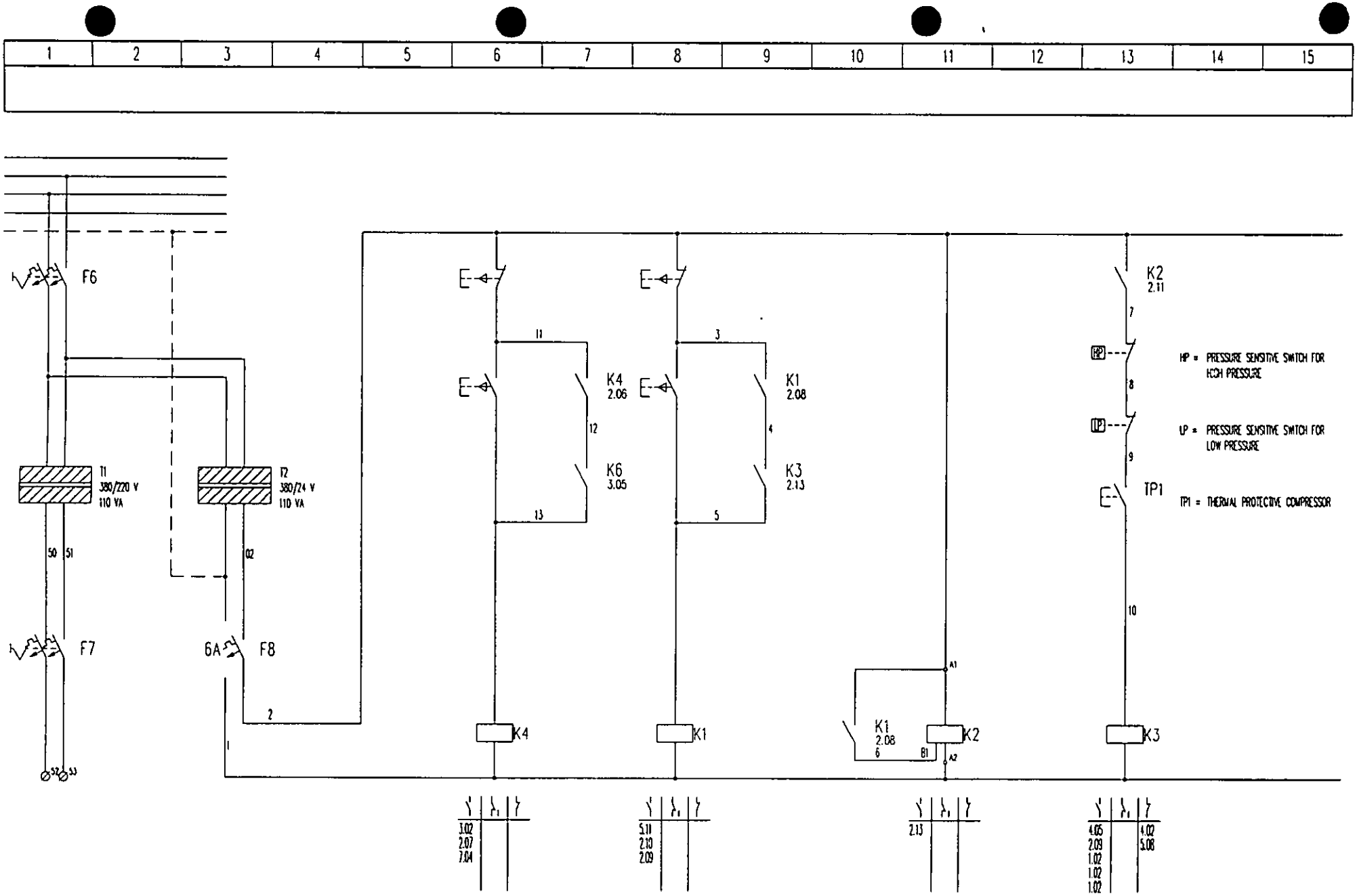

Firma	Dato	Navn	El diagram	Side
APV TECHNOHOY	19.11.93.	NS	MF 100 NO. L12	2
Reference	Rev. dato	Diagram nr.		
CARACOEIJS	17.03.94	D25737		

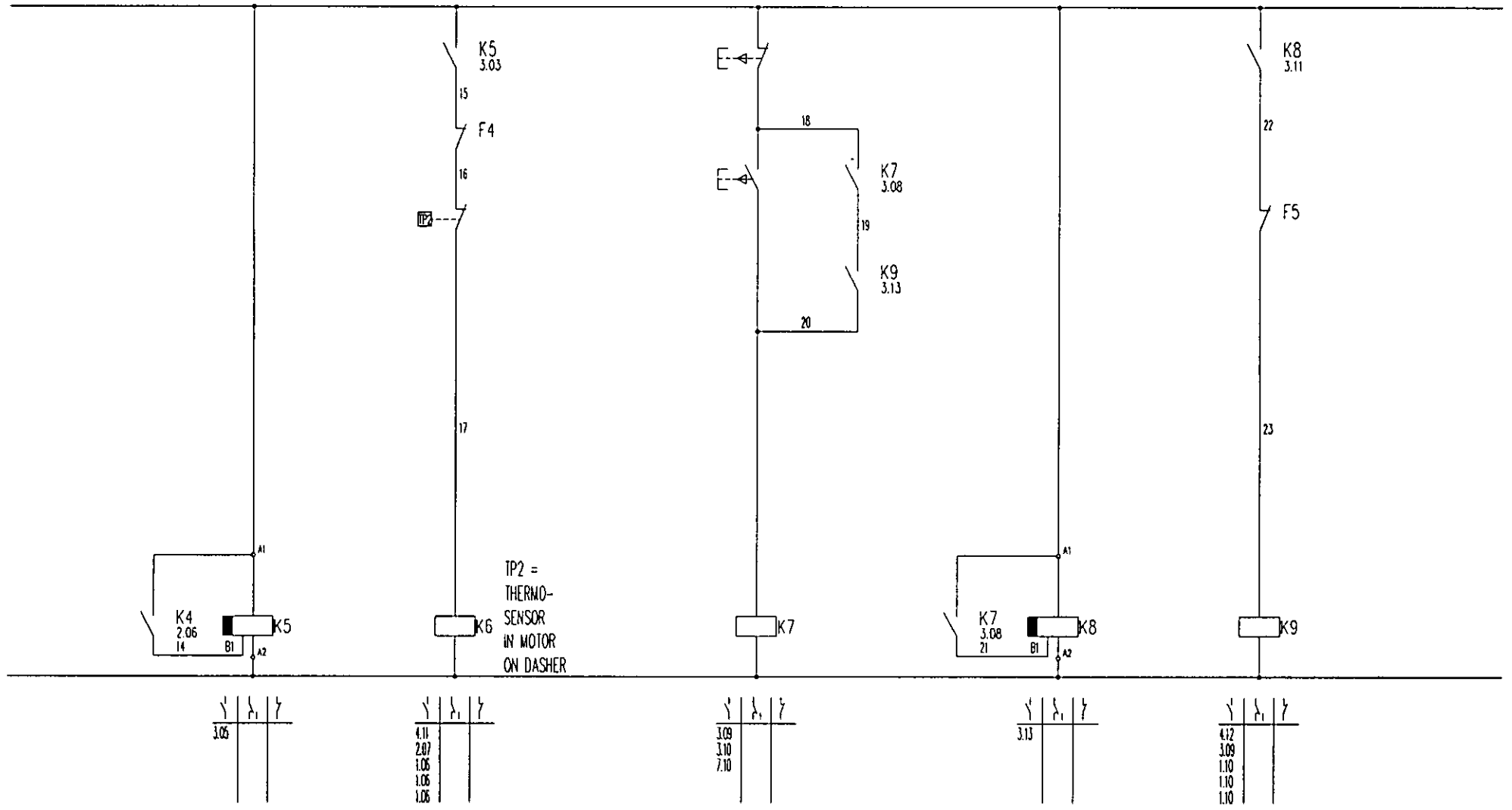

Firma	Dato	Navn	El diagram	Side
APV TECHNOHOY	19.11.93.	NS	MF 100 NO. L12	3
Reference	Rev. dato	Diagram nr.		
CARACOEIJS	17.03.94	D25737		

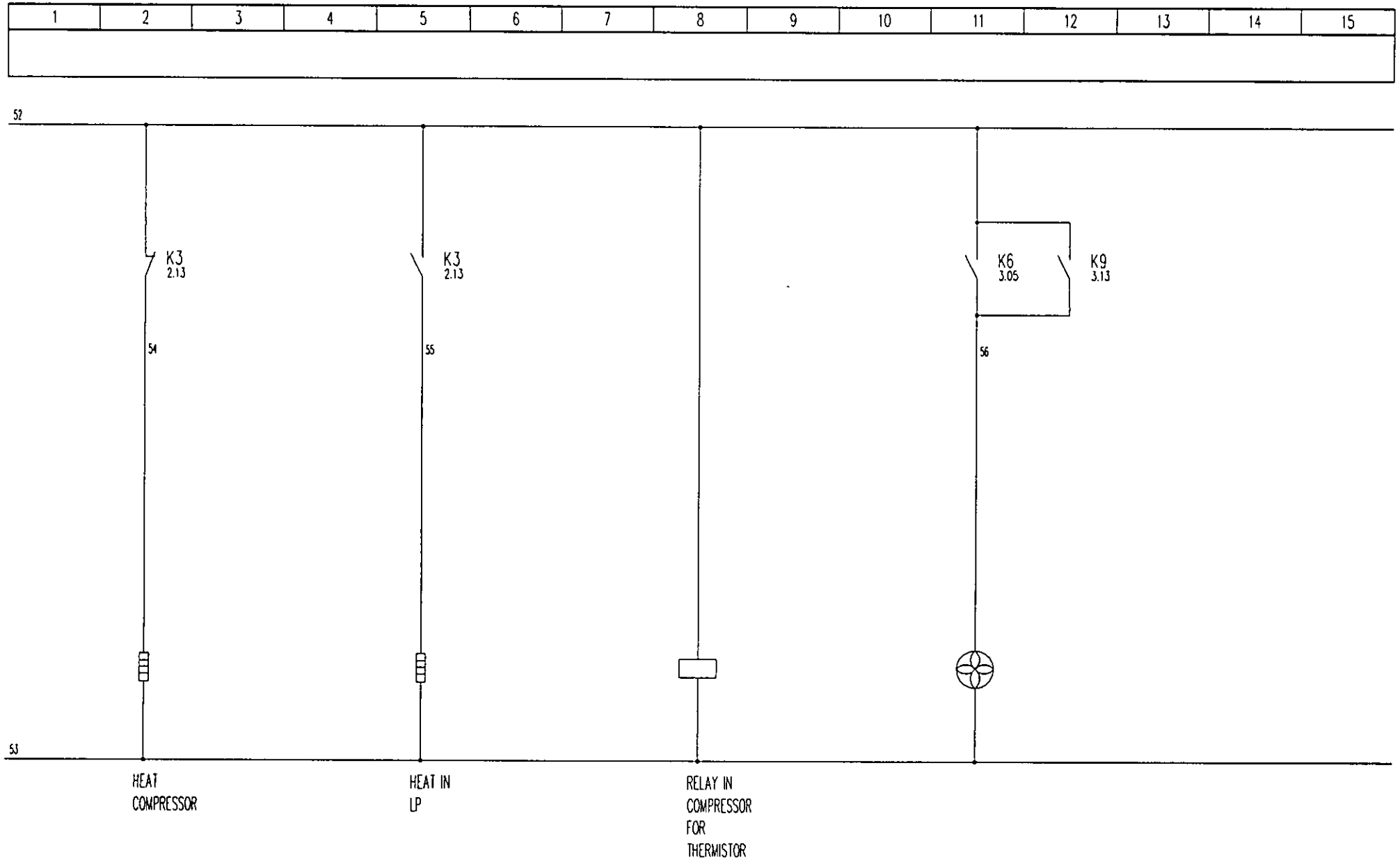

Firma	Dato	Navn	El diagram	Side
APV TECHNOHOY	19.11.93.	NS	MF 100 NO. L12	4
Reference	Rev. dato	Diagram nr.		
CARACOEIJS	17.03.94	D25737		

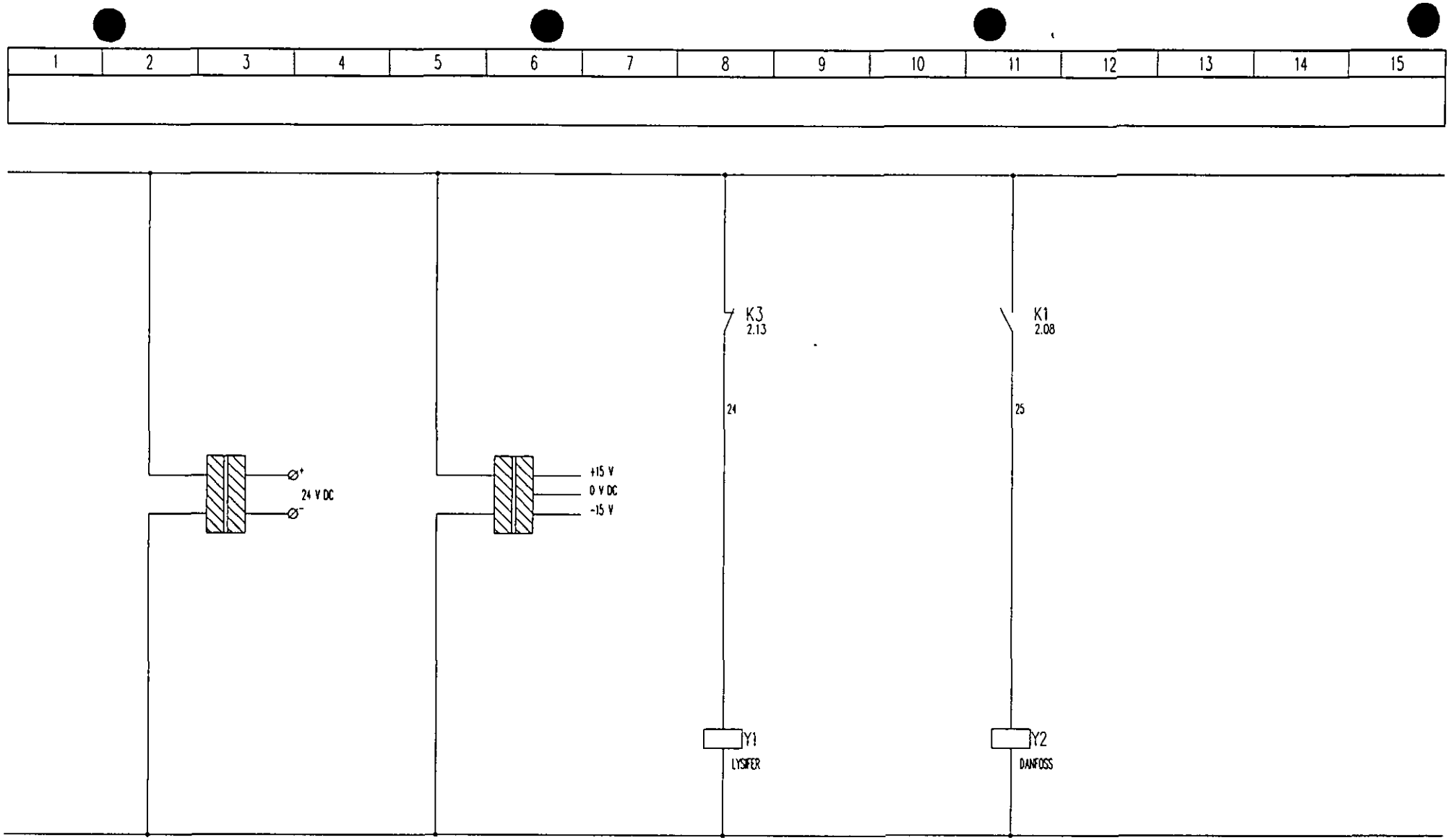

Firma	Dato	Navn	El diagram	Side
APV TECHNOHOY	19.11.93.	NS	MF 100 NO. L12	5
Reference	Rev. dato	Diagram nr.		
CARACOEIJS	17.03.94	D25737		

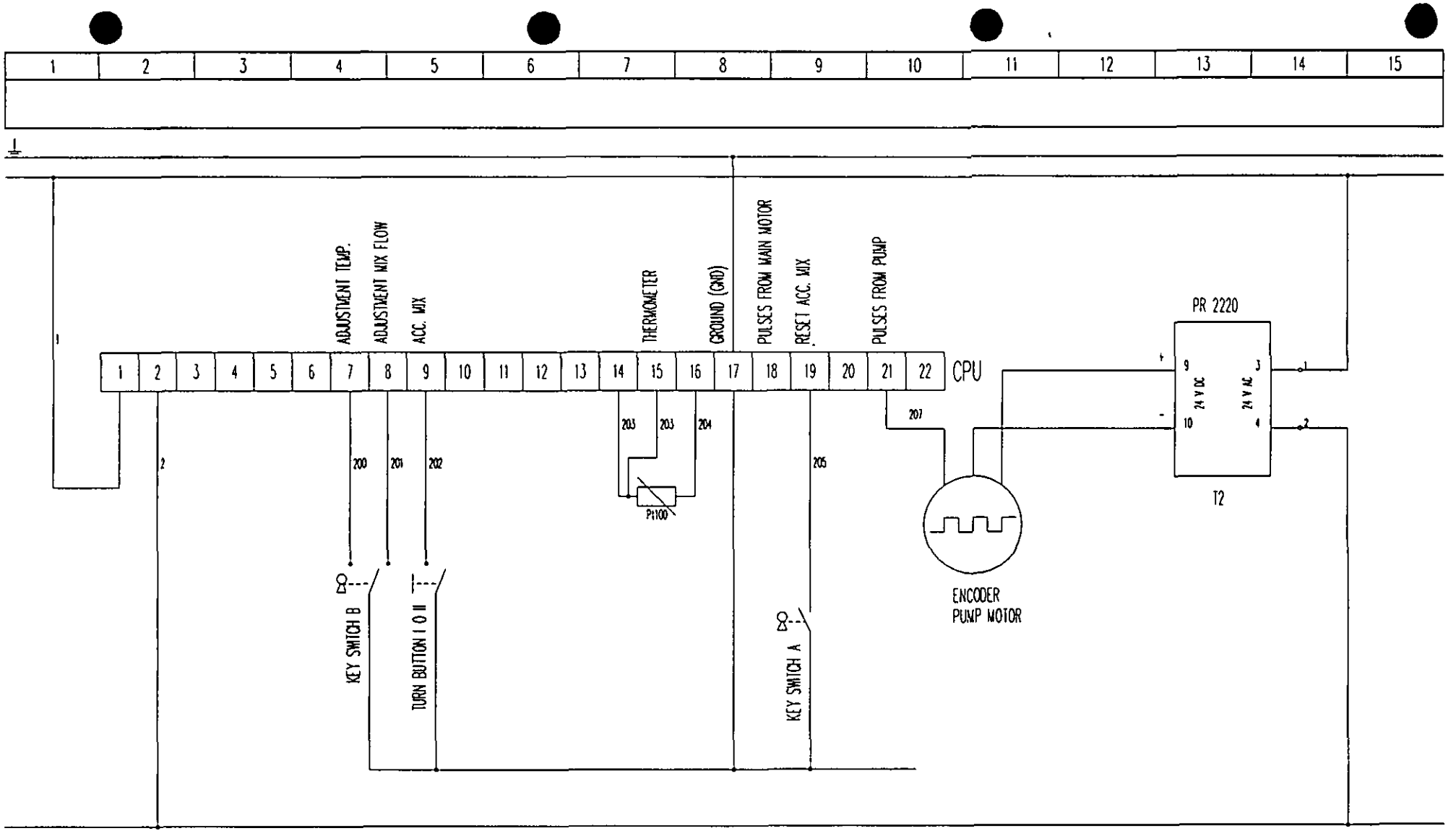

Firma	Dato	Navn	El diagram	Side
APV TECHNOHOY	19.11.93.	NS	MF 100 NO. L12	6
Reference	Rev. dato	Diagram nr.		
CARACOEIJS	17.03.94	D25737		

1	2	3	4	5	6	7	8	9	10	11	12	13	14	15

DANFOSS VLT 3004

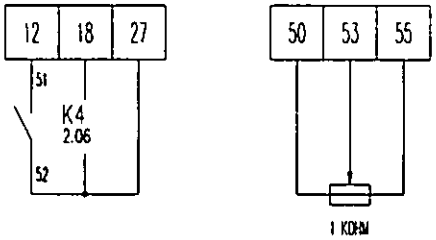

DANFOSS VLT 2020

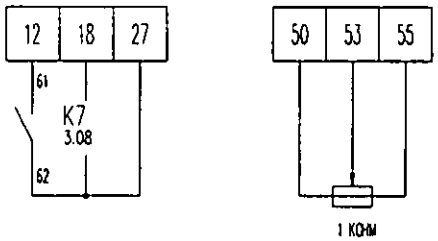

Firma	Dato	Navn	El diagram	Side
APV TECHNOHOY	19.11.93.	NS	MF 100 NO. L12	7
Reference	Rev. dato	Diagram nr.		
CARACOEIJS	17.03.94	D25737		

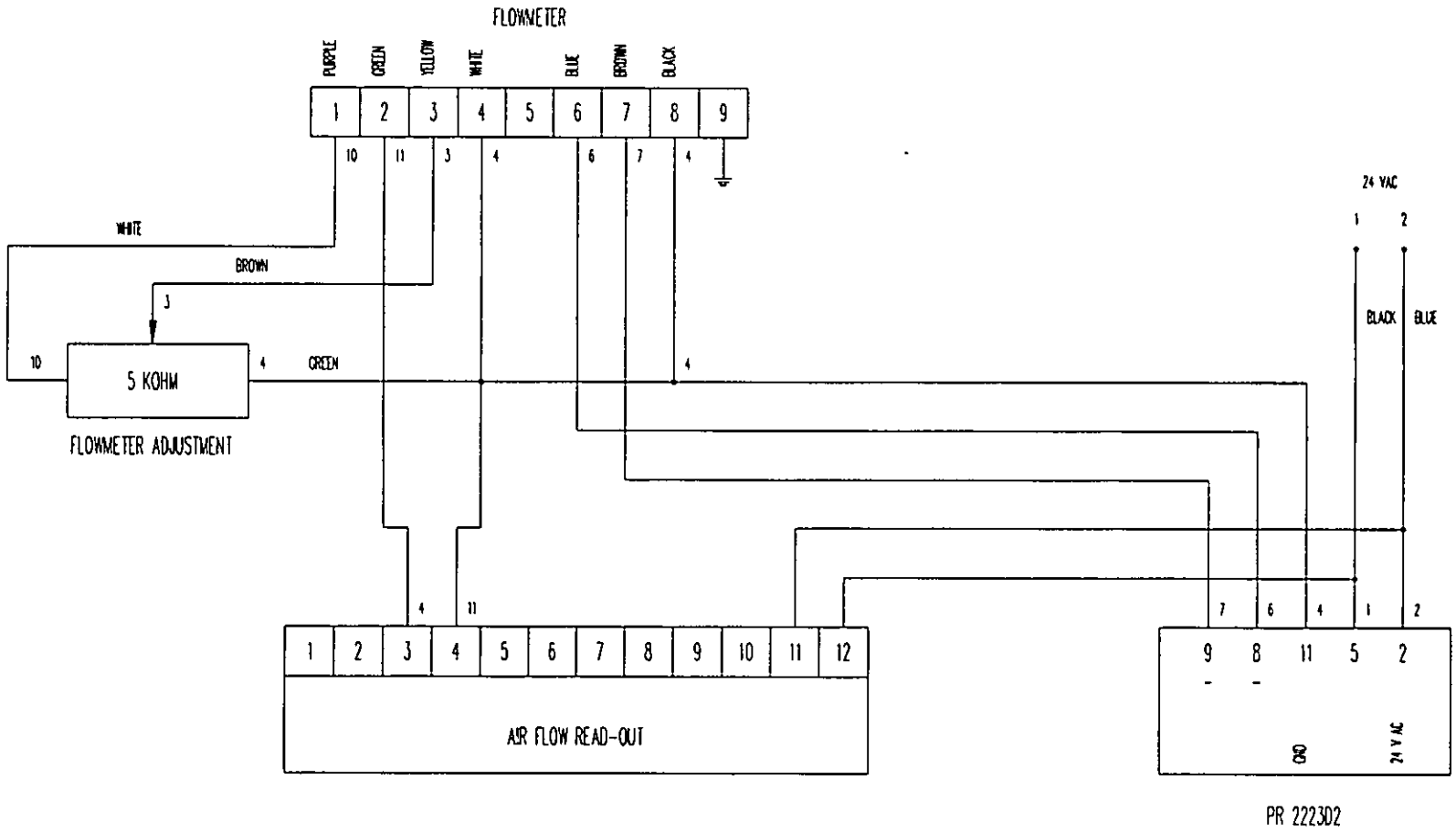

Firma	Dato	Navn	El diagram	Side
APV TECHNOHOY	19.11.93.	NS	MF 100 NO. L12	8
Reference	Rev. dato	Diagram nr.		
CARACOEIJS	17.03.94	D25737		

1	2	3	4	5	6	7	8	9	10	11	12	13	14	15

TERMINAL BOX CPU ENCLOSURE

⏚	200	201	203	204	11	10	4	4	4	3	31	30	+	+	+	-	-	-	1	1	1	1	2	2	2	2	⏚

TERMINAL BOX

⏚	U1	V1	W1	⏚	60	61	⏚	52	52	53	53	53	53	54	55	56	⏚	U2	V2	W02	W2	⏚	1	1	1	1	2

2	2	2	3	5	7	8	8	9	9	10	11	13	16	17	18	20	22	23	24	25	69	70	71	71	72	72	⏚

Firma	Dato	Navn	El diagram	Side
APV TECHNOHOY	19.11.93.	NS	MF 100 NO. L12	9
Reference	Rev. dato	Diagram nr.		
CARACOEIJS	17.03.94	D25737		

Technohoy
CARL HOYER A/S

Axel Kiers Vej 28-30
DK-8270 Aarhus - Højbjerg

Phone national 86 29 21 88
Phone internat. +45 86 29 21 88
Telefax +45 86 29 27 80
Carl Hoyer private +45 86 27 04 45

A/S reg. nr. 201200
Bankers: Den Danske Bank
S.W.I.F.T. Address:
DABA DK KK 4620135909
Postal Account: 8 17 12 38

Ijsfabriek de Valk B.V.
Caraco Ijs
Postbus 13
NL - 7447 An Hellendoorn

Your ref.: Our ref.: JJ/ts Date: 22.01.93

For the attention of Mr T.P. Dijksterhuis

QUOTATION NO.: 31-2013
1 MF 100 Continuous Ice Cream Freezer with built-in freon 22 compressor Nominal output 85-420 l/h

Working principle

The ice cream mix is metered into the freezing cylinder by a rotary displacement pump. A constant air flow is fed in together with the mix. At the passage through the cylinder, the air is whipped into the mix by a mutator.

Liquid freon, evaporating in the cooling jacket around the cylinder, supplies the freezing. Stainless steel blades scrape the frozen ice cream off the inside of the cylinder wall, and another rotary displacement pump adjusts the throughput and barrel pressure. The finished ice cream is then led to the outlet pipe.

Standard design

The freezer housing is welded from heavy stainless steel plate. The lower section, which contains the non-vibrating suspended refrigerating compressor, is built on a stainless steel frame with easily removeable stainless steel doors.

The freezers are furnished with transport wheels for easy transport in the factory. All surfaces coming into contact with the ice cream are manufactured from stainless steel or plastic. The MF series are continuous freezers and designed to comply with US 3-A sanitary standards or better.

The freezing cylinders
a re made of stainless steel. The inside is hard chromium plated and honed to mirror finish.

The air system
is for connection to an existing main supply and is supplied with pressure regulator valve, check valve and pressure gauge.

Mix and ice cream pumps
The inlet pump is a rotary displacement pump. The pump drive is equipped with frequency converter for variation of speed. The outlet pump is also a rotary displacement pump.

The control panel
includes square DIN-type meters for air pressure, current of the main motor and pressure/ temperature of the refrigerant; and further start and stop pushbuttons for the motors and flow of refrigerant.

The electrical equipment
includes a control box with fuses, motor starters, motor protection etc. and complete internal wiring for 3-phase ac.

Ijsfabriek de Valk, B.V., An Hellendoorn
Quotation no. 31-2013 **22.01.93**

Installation
Being a complete self-contained unit, the freezer needs connections for ice cream mix, air, power and cooling water only.

Nominal output per hour
Capacity: MF 100: 85-420 litres ice cream/hour

The above figures are based on the following conditions

Inlet of mix:	max.	+ 10° C
Outlet of ice cream:		- 15° C
Overrun:		0-10 %
Total solids in mix:		15-50 %
Cooling water temperature:	max.	20° C

Following technical details are standard

* Danfoss constant pressure valve for evaporating temperature
* Danfoss thermostatic expansion valve
* Frequency converter for speed control of pump
* Mix pump: Rotary displacement pump, CIP
* Cream pump: Rotary displacement pump, CIP
* Stepwise regulation of pump ratio
* Closed type dasher
* Ammeter for main motor

The maximum output of the freezer depends to a large extent on the recipe of the sauce. Maximum output can be calculated on the basis of the recipe of the sauce in question.

Price:.....DKK 455.000,-

Shipping box:.....DKK 5.500,-

Total price:.....DKK 460.500,-

Optionals:

1)	Mass flow meter for control of air inlet	DKK	34.600,-
2)	Digital display of mix consumption l/h, and accumulated mix consumption	DKK	18.600,-
3)	Digital display of ice cream temperature	DKK	12.600,-
4)	Frequency converter for dasher speed	DKK	46.300,- ?
5)	Digital display for dasher speed	DKK	17.500,-
6)	Air filter for pure air, built-in	DKK	11.200,-
7)	Bourdon manometer for barrel pressure	DKK	9.600,-
8)	Digital manometer with transducer for measurement of cylinder pressure	DKK	30.300,-
9)	Adjustable machine legs as a supplement to wheels	DKK	9.000,-

Installation: Installation and commissioning of the machine / equipment is not included in our quotation but can be carried out by a TECHNOHOY service engineer.
Please see enclosed price sheet.

Prices: Are to be understood Ex Works Aarhus, DK, including shipping box for lorry transportation. VAT and other charges are not included in the above prices.

Time of delivery: Approx. 14-16 working weeks from receipt of written purchase order or according to further agreement. Subject to our capacity being unsold.

The abovementioned time of delivery is to be reckoned from the date all relevant technical information and/or samples necessary for production of the machine have been received and approved by TECHNOHOY.

In addition, the time of delivery depends on the down payment being paid according to agreed terms of payment.

A delay in delivery is within range of possibility, if the receipt of any technical information or down payment is delayed.

Machines and equipment delivered remain property of TECHNOHOY until fully payment.

Terms of payment: 50% down payment to accompany written purchase order
50% at delivery
or to be agreed upon.

Validity: Valid for orders received within 30.04.93.

Technohoy
CARL HOYER A/S

Ijsfabriek de Valk, B.V., An Hellendoorn
Quotation no. 31-2013 **22.01.93**

We hope that the above is in accordance with your wishes and look forward to hearing from you again.

Best regards,

TECHNOHOY CARL HOYER A/S

Jens Juhl
Regional Export Manager

Carl Hoyer
Managing Director

Enclosure: MF 100 leaflet
Price sheet

Technohoy
CARL HOYER A/S

PRICE SHEET
COMMISSIONING

Ice Cream Customers

June 1992

Price per hour	DKK 445.00
Price per hour's overtime (after 8 hours)	DKK 565.00
Mileage per kilometre	DKK 2.15
Accomodation per night	DKK 500.00
Allowance for meals, etc. per 24 hours	DKK 310.00

Air travelling expenses are to be paid according to account rendered

MF 50, MF 75, MF 100, MF 200 AND MF 300

Continuous Ice Cream Freezers

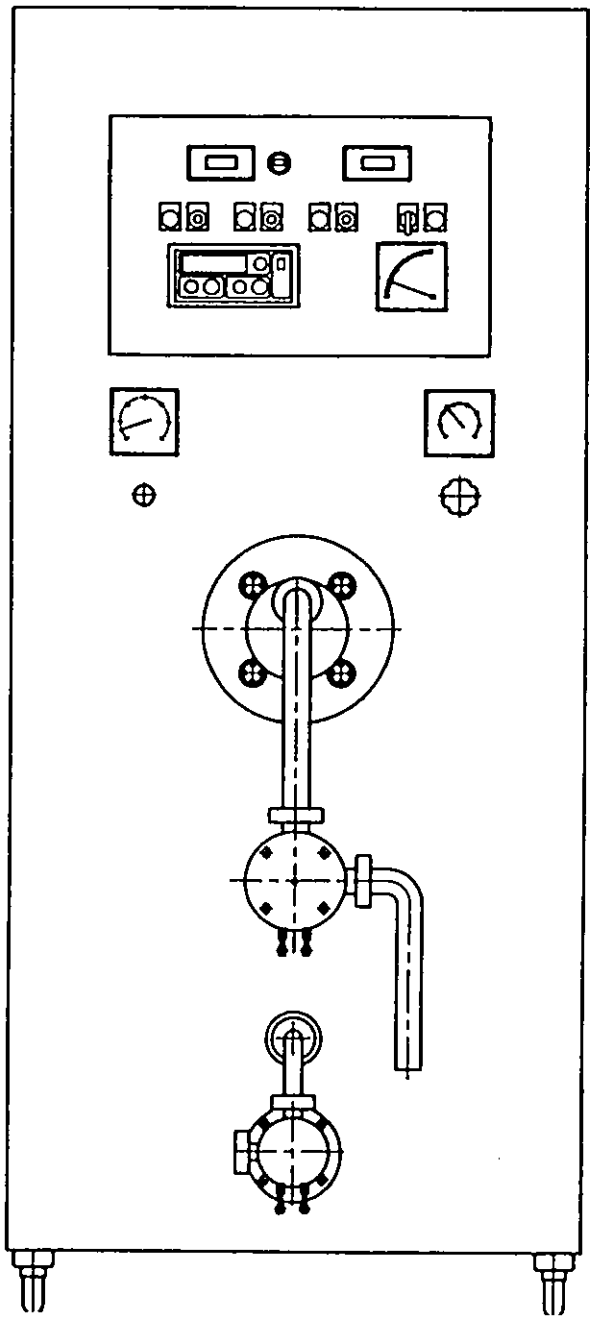

The freezers are complete self-contained units only requiring connections for ice cream mix, air, power and cooling water. The MF 300 can also be supplied with ammonia as refrigerant.

Standard design

The freezer housing is welded from stainless steel plate. The lower housing for the refrigerating compressor is built on a stainless steel frame with easily removable stainless steel covers. All freezers, except MF 200 and MF 300, are furnished with wheels for easy moving in the factory. The MF 200 and MF 300 is mounted on adjustable legs.

The freezing cylinder

is made of stainless steel. The inside surface is hard chromium plated and mirror finished. All MF freezers have open type dashers as standard, except from MF 50 and MF 75 which have solid dashers.

The air system

is for connection to an existing main supply and is supplied with pressure regulator valve, check valve and pressure gauge.

Drive

Power is transferred from the main motor direct to the dasher by V-belts. Electronic speed regulation of the dasher is available as optional extra.

Mix and Ice cream pumps

The mix pump on MF 50, MF 75, MF 100 and MF 100L is of the piston type suitable for CIP, whereas the ice cream pump is a rotary displacement pump. A CIP rotary ice cream pump is available as an optional extra. MF 200 and MF 300 always have positive displacement pumps for mix.

Optional equipment

a) Built-in air compressor
b) Anormal power or frequency connection
c) Open dasher / closed dasher, other than standard
d) Frequency converter for dasher speed
e) Mechanical speed adjustment for dasher MF 75
f) CIP for positive pumps 1 pc.
g) CIP pneumatic switch for pumps
h) CIP intermitting turning of dasher
i) Fully electronic flow control for air inlet
j) Digital display of mix consumption l/h and accumulated mix consumption.
k) Digital display of ice cream temperature
l) Digital display of dasher speed
m) Digital display of barrel pressure
n) Pureair air filter, built-in
o) Dairy standard manometer for barrel pressure

Technohoy
CARL HOYER A/S

Main dimensions of a MF 300 Single Freezer

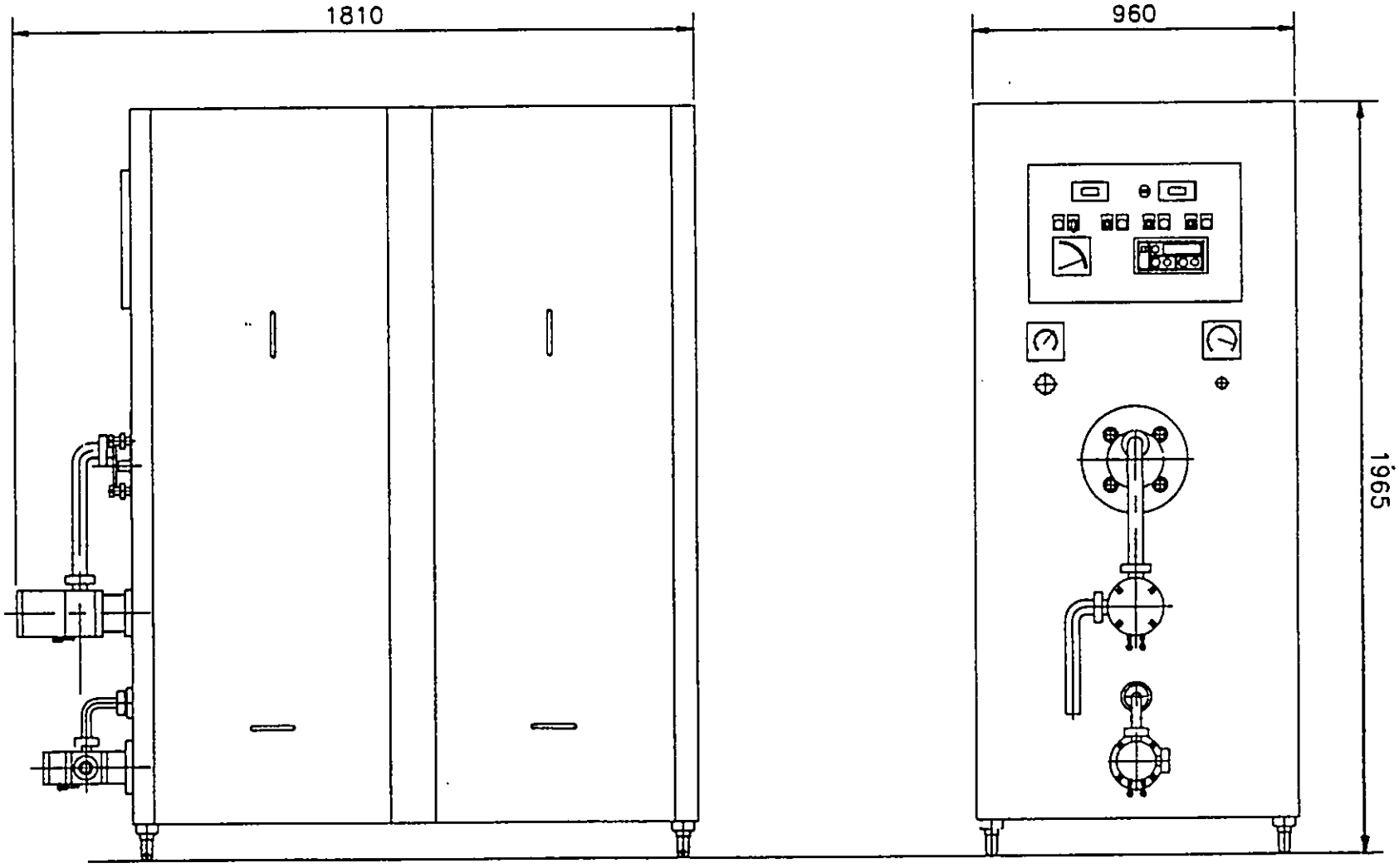

We reserve the right to make alterations in specifications without notice

Technohoy product description

Technohoy
CARL HOYER A/S

April 1990. TECHNICAL DATA for standard models		MF 50 Laboratory freezer	MF 75 Spec. production f.limited output	MF 100 Production freezer	MF 100 L Production freezer	MF 200 Production freezer	MF 300 Production freezer
Nominal output	l/h	20 - 100	30 - 160	60 - 300	84 - 420	100 - 550	150 - 650
	Imp. Gall	4.5 - 22	7 - 35	13 - 66	19 - 92	22 - 121	33 - 154
	U.S. Gall	5.5 - 27	8 - 42	16 - 79	22 - 111	27 - 145	40 - 185
Evap./condensing temperature	°C	-25 / + 40	-25 / + 40	-25 / + 40	-25 / + 40	-25 / + 40	-25 / + 40
	°F	-13 / + 104	-13 / + 104	-13 / + 104	-13 / + 104	-13 / + 104	-13 / + 104
Refrigerating effect	W	6000	10700	13440	16000	16000	20600
	kcal/h	5160	9202	11558	13760	13760	17700
Surface freezing tube	cm^2	628	942	1885	2639	3769	4882
Compressor motor	kW	2.2	5.5	7.5	9.2	9.2	11.0
Electric main motor	kW	2.2	3.0	5.5	7.5	7.5	7.5
Electric pump motor	kW	0.37	0.37	0.55	0.55	0.55	0.75
Power connection (standard)		3 x 380V, 50 c/s	3 x 380V, 50 c/s	3 x 380V, 50 c/s	3 x 380V, 50 c/s	3 x 380V, 50 c/s	3 x 380V, 50 c/s
Mix - inlet piping	øi mm	10.0	10.0	16.0	16.0	16.0	25.0
Ice cream outlet piping	ø mm	25.0	25.0	38.0	38.0	38.0	38.0
Air connection	ø inch	3/8	3/8	3/8	3/8	3/8	3/8
Air consumption	l/h	50	80	150	210	275	350
Required air pressure	bar	7	7	7	7	7	7
Water req. app. (max. +25°C)	l/h	350	600	1100	1560	1725	1800
Required water pressure	bar	3 - 4	3 - 4	3 - 4	3 - 4	3 - 4	3 - 4
Water inlet connection	ø inch	1/2	1/2	3/4	3/4	3/4	3/4
Water outlet connection	ø inch	1/2	1/2	3/4	3/4	3/4	3/4
Mutator speed, 50 c/s	rpm	400 - 1000	600	430	430	300	300
OPTIONAL mutator speed	rpm		200 - 600	200 - 600	200 - 400	200 - 400	200 - 400
Standard mutator		Solid mutator	Solid mutator	Open type mutator	Open type mutator	Open type mutator	Open type mutator
OPTIONAL equipment			Open type mutator	Solid mutator	Solid mutator	Solid mutator	
Mix pump		Piston type	Piston type	Piston type	Piston type	Piston type	Positiv
Ice cream pump		Rotary piston type	Positiv	Positiv	Positiv	Positiv	Positiv

Halbhermetische Motorverdichter

sauggasgekühlt, wassergekühlt

suction gas cooled, water cooled

refroids par gaz aspiré,
refroids par eau

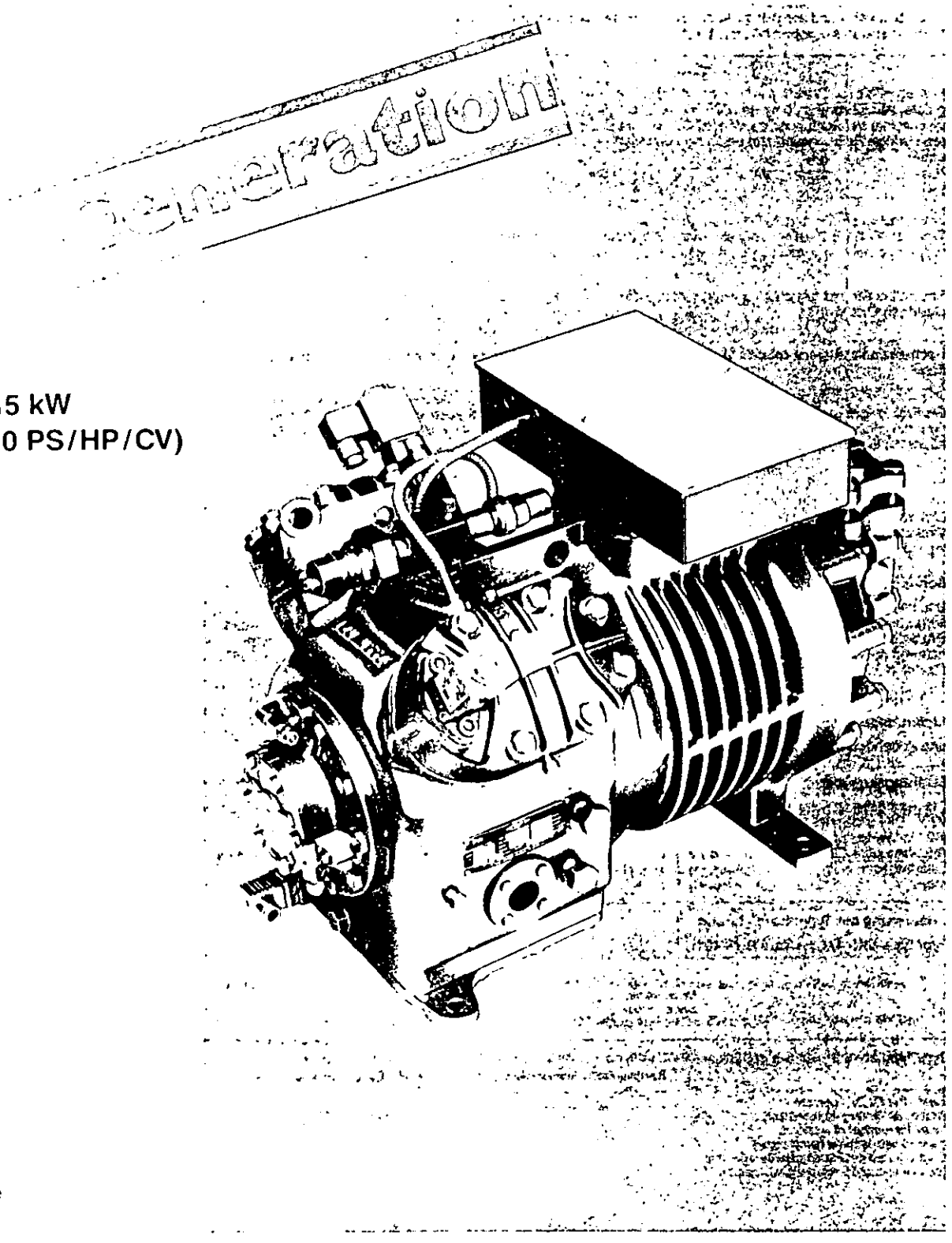

0,7 bis/to/à 15 kW
(1 bis /to/à 20 PS/HP/CV)

Kältemittel
Refrigerant
Fluide frigorigine
R 12, R 22, R 502

No. 71/3

Typ 4Z-5.2 – 4N-20.2
Typ BHS 752 – 2402

(Pos./Item/No.1-154)

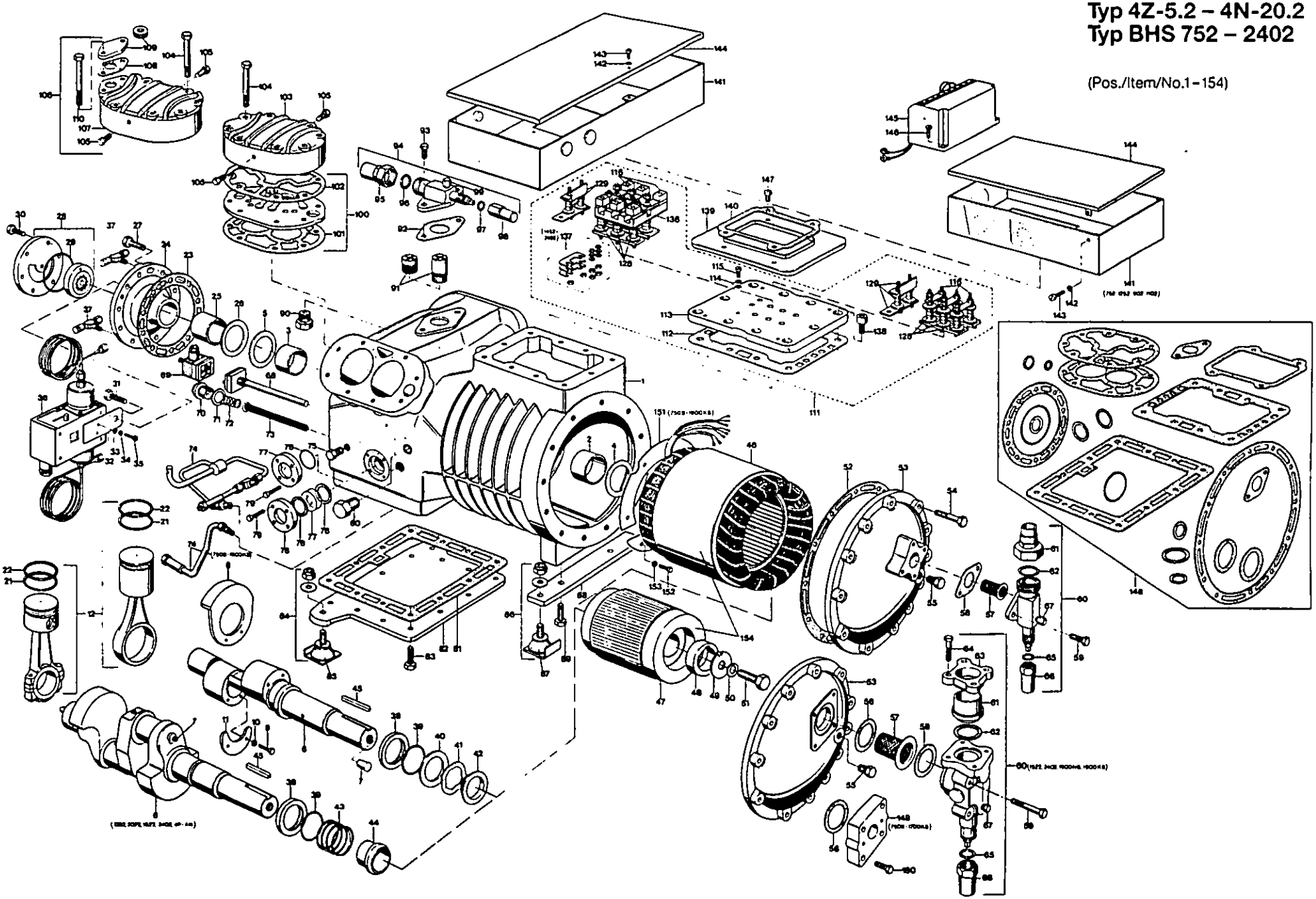

Bitzer Kühlmaschinenbau GmbH & Co. KG
P.O. Box 240 · Eschenbrünnlestraße 15
D-7032 Sindelfingen

Telefon 07031/6107-0
Telex 7265852
Telefax 07031/61077

ANLEITUNG ZUR MONTAGE UND INBETRIEBNAHME VON HALBHERMETISCHEN HUB-KOLBENVERDICHTERN

INSTRUCTIONS FOR INSTALLING AND COMMISSIONING SEMIHERMETIC RECIPROCATING PISTON COMPRESSORS

INSTRUCTIONS DE MONTAGE ET DE MISE EN SERVICE DES COMPRESSEURS SEMI-HERMETIQUES A PISTONS

Inhaltsverzeichnis

1. Verdichterausführung
2. Anwendungsbereiche
3. Montagehinweise
4. Elektrischer Anschluß
5. Inbetriebnahme
6. Anschlüsse

Index

1. Compressor design
2. Application range
3. Recommendations for mounting
4. Electrical connections
5. Commissioning
6. Connections

Table des matières

1. Exécution des compresseurs
2. Domaines d'utilisation
3. Instructions de montage
4. Raccordement électrique
5. Mise en service
6. Raccordements

1. Verdichterausführung

- Halbhermetischer Kältemittelverdichter in Hubkolbenbauweise
- Ölfüllung BITZER B5
- Schutzgasfüllung (getrockneter Stickstoff)

2. Anwendungsbereiche

- Kältemittel R12,R22,R502,R500, R13,R13B1,R114 (andere Kältemittel auf Anfrage)
- Einsatzgrenzen siehe Typenblätter

3. Montagehinweise

3.1 Allgemeines

- Aufstellung des Verdichters : waagerecht auf Schwingungsdämpfern oder im Bedarfsfall auch starr.
- Direkte Montage auf wassergekühltem Verflüssiger nur mit Schwingungsdämpfern; bei starrem Aufbau, Gefahr von Schwingungsbrüchen.
- Schwingungsdämpfer (Beipack) fangen den Anlaufstoß elastisch ab und vermindern Schwingungsübertragung auf den Unterbau.
  Die Elemente haben teilweise unterschiedliche Härtewerte (Motor /Kurbelgehäuse); sie sind durch Stempelaufdruck oder Farbmarkierung gekennzeichnet. Zuordnung siehe Hinweis unter Abschnitt 3.1.1 und 3.1.2.
- Transportsicherung:
  bei Aggregatlieferungen sind die Schwingungsdämpfer zur Vermeidung von Transportschäden blokkiert, die Sicherungen müssen nach der Montage entfernt bzw. gelöst werden.

1. Compressor design

- Semihermetic refrigeration compressor of reciprocating piston construction
- Oil filling BITZER B5
- Protective gas charge (dry nitrogen)

2. Range of application

- Refrigerants R12,R22,R502, R500,R13,R13B1,R114 (other refrigerants on request)
- Application limits see data sheets.

3. Recommendations for mounting

3.1 General

- Mounting of compressor horizontal, on antivibration mountings or when necessary also rigidly mounted.
- Compressor must not be rigidly mounted on watercooled condensors (danger of transmitting vibrations to condensor tubes).
- Anti-vibration mountings (packed with compressor) elastically absorb the starting shock and reduce vibration transmissions to the foundation.
  The elements have partly different hardness values (motor/crankcase) and are coded either with a colour marking or a printing stamp. For mounting position, see recommendations under section 3.1.1 and 3.1.2.
- Transport locks:
  when complete units are delivered the anti-vibrators are locked to prevent transport damage, the locks must be removed resp. loosened after installation.

1. Exécution des compresseurs

- Compresseurs à fluide frigorigène semi-hermétiques dans la version à pistons
- Remplissage d'huile BITZER B5
- Remplissage avec gaz neutre de protection (azote sèchée)

2. Domaines d'utilisation

- Fluides frigorigènes R12, R22, R502,R500,R13,R13B1,R114 (d'autres fluides frigorigènes sur demande).
- Domaines d'utilisation : prière de se reporter à nos feuilles de caractéristiques techniques.

3. Instructions de montage

3.1 Généralités

- Disposition du compresseur : en position horizontale sur silentblocks, éventuellement en cas de nécessité fixation rigide au sol.
- Montage direct sur condenseur à eau uniquement avec éliminateur de vibration faute de quoi danger de rupture.
- Les silentblocks (fournis avec le compresseur) sont chargés d'amortir les à-coups au démarrage par leur élasticité; ils diminuent la transmission des vibrations à leur support.
  Les éléments sont, en partie, de résistances diverses (moteur/carter); ils sont alors différenciés par un poinçon ou une marque de couleur. Attribution: voir indications données sous les paragraphes 3.1.1 et 3.1.2.
- Dispositif pour le transport: pour la livraison des groupes, les silentblocks sont bloqués afin d'éviter des dégats au cours du transport. Aprés montage, ces dispositifs de blockage sont à démonter ou tout au moins à desserrer.

3.1.1 Verdichter/Compressors/Compresseurs BHS 171 bis/to/à 491

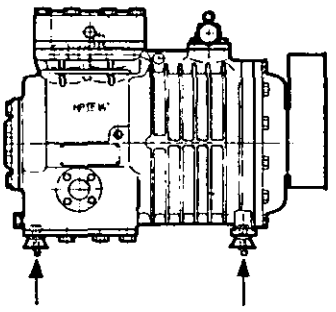

Bei unterschiedlichen Härtewerten (siehe Stempelaufdruck) sind die Teile mit der höheren Kennziffer auf der Motorseite zu montieren.

With differing hardness values (see stamped marking), the parts with the higher coding should be mounted on the motor side.

Suivant les différentes résistances, sur chaque pièce figure, imprimé au poinçon, un chiffre. De toutes les pièces, celles qui comportent le chiffre le plus élevé doivent être montées du côté du moteur.

BHS 171 ÷ 231

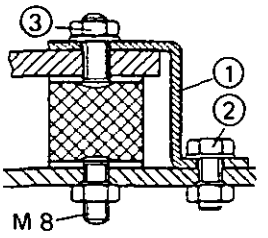

Nach Montage des Aggregates rot gekennzeichnete Transportsicherung ① entfernen. Danach Befestigungsschrauben bzw. –muttern ② + ③ wieder fest anziehen.

Remove red transit locks ① and retighten fixing screws or nuts ② + ③ before starting.

Aprés montage du groupe enlever les dispositifs de sécurité pour transport ① et resserer les vis ou écrous de fixation ② + ③.

BHS 491/351

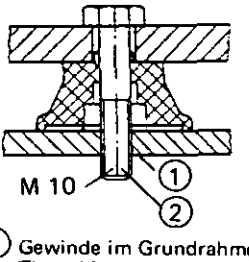

① Gewinde im Grundrahmen
Thread in baseframe
Filet dans le chassis

② Selbstsichernde Schraube
Selflocking-screw
Vis fermant automatiquement

Schraube ② zum Transport des Aggregates anziehen, bis Gummi-Element ca. 1-2 mm zusammengedrückt ist.

To transport unit tighten screw ② until rubber-element is compressed approximately 1-2mm.

Pour le transport du groupe serrer la vis ② jusqu'à ce que l'élément en caoutchouc soit comprimé environ 1-2 mm.

Schraube ② nach Montage lösen, bis Schraubenkopf nicht mehr an Bodenplatte des Verdichters anliegt.

After installing loosen screw ② until the head no longer rests on the base plate of the compressor.

Aprés montage déserrer la vis ② jusqu' à ce que la tête ne soit plus sur la plaque de fond du compresseur.

3.1.2 Verdichter/Compressors/Compresseurs 2 U - 3.2 bis/to/à 6 F - 50.2 (66 F - 100.2)

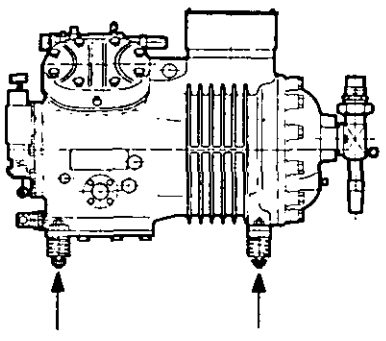

Bei unterschiedlichen Dämpfungselementen (siehe Farbmarkierung) sind die längeren Federn auf der Motorseite zu montieren.

With differing anti-vibration elements (see colour coding) the longer springs should be mounted on the motor side.

En ce qui concerne les différents éléments amortisseurs (voir marque de couleur), les ressorts les plus longs doivent être montés du côte du moteur.

Transportposition
Transport postion
Position durant le transport

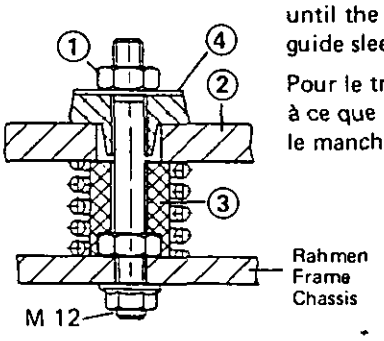

Selbstsichernde Mutter ① zum Transport des Aggregates anziehen bis die Bodenplatte ② des Verdichters auf der Führungshülse ③ aufliegt.

To transport the unit, tighten the self-locking nut ① until the baseplate of the compressor ② rests on the guide sleeve ③.

Pour le transport, serrer l'écrou auto-bloquant ① jusqu' à ce que la plaque de fond du compesseur ② repose sur le manchon de guidage ③.

Betriebsposition
Operating position
Position d'exploitation

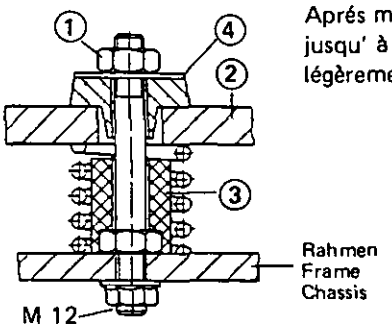

Selbstsichernde Mutter ① nach Montage so weit lösen, bis sich die Unterlegscheibe ④ eben verschieben läßt.

Loosen the self-locking nut ① after mounting until the washer ④ is just free to move.

Aprés montage, l'écrou auto-bloquant doit être desserré jusqu' à ce que la rondelle inférieure ④ puisse être légèrement bougée.

3.2 Rohranschlüsse/Rohrleitungen

Achtung!
- **Verdichter steht unter Überdruck (Schutzgas)**
- **Absperrventile sollten bis zum Evakuieren geschlossen bleiben.**

3.2.1 Rohranschlüsse
sind so ausgeführt, daß Rohre in den gängigen Millimeter– und Zollabmessungen verwendet werden können. Lötanschlüsse haben gestufte Durchmesser, je nach Abmessung wird das Rohr mehr oder weniger tief eintauchen. Im Bedarfsfall kann das Buchsenende mit dem größeren Durchmesser auch abgesägt werden.

3.2 Pipe connections/pipe lines

Attention!
- **Compressor is under pressure (protective gas)**
- **The shut-off valves should remain closed until evacuation takes place**

3.2.1 Pipe connections
are so made that tubes can be used having normal millimetre or inch dimensions. Solder connections have a stepped diameter, according to size the tube can be pushed over or into the fitting, when necessary the end with the largest diameter can be cut off.

3.2 Raccordement des tuyauteries/ Tuyauteries

Attention!
- **Le compresseur est sous pression de gaz de protection**
- **Maintenir fermées les vannes d'arrêt jusqu'au tirage à vide**

3.2.1 Raccordement des tuyauteries
Les raccords sont prévus de telle manière qu'il est possible d'utiliser des tuyaux aux dimensions courantes en millimètres et en pouces. Les raccords à souder sont à plusieurs diamètres. Suivant le diamètre du tuyau celui-ci pénétrera plus ou moins. Si nécessaire, l'extrémité avec le diamètre le plus grand peut être sciée.

Absperrventile mit Rotalock-Verschraubung

Shut-off valves with Rotalock adapter

Des vannes d'arrêt avec adaptateur Rotalock

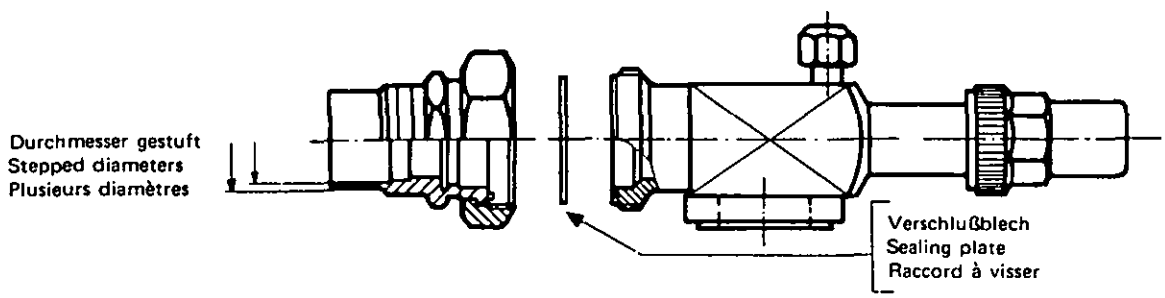

Achtung!
Zum Einlöten der Rohre ist die Rohrverschraubung zu lösen und das Verschlußblech zu entfernen.

Attention!
When soldering the tube the screwed pipe connections must be undone and the sealing plate removed.

Attention !
Pour la soudure des tuyaux il y a lieu de dévisser les raccords à visser.

3.2.2 Rohrleitungen
Grundsätzlich sollen nur Rohrleitungen und Anlagenkomponenten verwendet werden, die innen sauber und trocken sind (frei von Zunder, Metallspänen, Rost– und Phosphatschichten) und luftdicht verschlossen angeliefert werden.

3.3 Anlaufentlastung / Leistungsregulierung
(siehe auch Techn.Info Nr.22 und Nr. 13)
Die Ventiloberteile werden zum Schutz gegen Transportschäden als Beipack geliefert; sie müssen vor dem Evakuieren montiert werden. Zu diesem Zweck ist der Blindflansch gegen das Oberteil zu wechseln.

Achtung !
Verdichter steht unter Überdruck (Schutzgas)

Um Verwechslungen zu vermeiden sind Zylinderkopf und Ventilflansch

3.2.2 Pipe lines
Only tubes and components which are clean and dry inside (free from slag, swarf, rust, and phosphate coatings) and which are delivered with an air tight seal should be used.

3.3 Start unloading/Capacity control
(see also Technical Info No. 22 and No. 13).
The upper parts of the valves are included packed separately when delivered to protect against transport damage. These must be mounted **before evacuation** take place. In order to do the sealing flange should be changed for the valve so upper part.

Attention!
Compressor is under pressure (Protective gas).

To avoid confusion the cylinder head and valve flange are marked

3.2.2 Tuyauteries
D'une manière général on ne doit utiliser que des tuyauteries, des accessoires et des composants, qui soient intérieurement propres et secs et qui sont fournis hermétiquement clos. En particulier il ne doit y avoir ni calamine, ni couche de rouille ou de phosphate.

3.3 Délestage au démarrage / Régulation de puissance
(Prière de se reporter également à nos Informations Techniques No. 22 et No. 13).
La partie supérieure des clapets est livrée en vrac avec le compresseur et ceci afin d'éviter des dégats au cours du transport. Elles sont à mettre en place avant le tirage à vide. Pour cela il faudra faire l'échange entre la bride d'obturation et la partie supérieure du clapet.

Attention !
Le compresseur est sous pression de gaz de protection.

Pour éviter des interversions, les têtes de cylindre et les bridges de

mit einer Kennzeichnung versehen; ein Paßstift in der Flanschfläche erlaubt außerdem nur die richtige Positionierung.

Zum Lieferumfang der Anlaufentlastung gehört ein Rückschlagventil, das zum Einbau in die Druckgasleitung bestimmt ist (siehe auch Techn. Info Nr. 22).

with a code, in addition a pin in the flange surface only allows the correct assembly.

A check valve is also included with the starting unloader for fitting in the discharge line (see also Technical Info No. 22).

clapets sont munies d'un repérage. De plus une goupille de positionnement logée dans la surface de la bride assure un positionnement correct.
Un clapet de retenue fait également partie de la fourniture du délestage au démarrage, qui est à monter dans la tuyauterie du gaz sous pression (priére de se reporter à notre Information Technique No. 22).

Anlaufentlastung „SU"
Start unloading „SU"
Délestage au démarrage „SU"

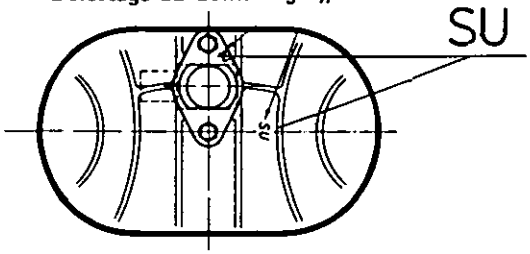

Leistungsregulierung „CR"
Capacity control „CR"
Régulation de puissance „CR"

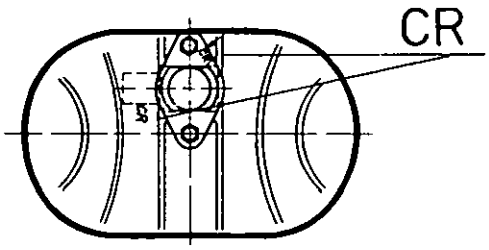

4. Elektrischer Anschluß

4.1 Allgemeine Hinweise

- Die Ausführung der Elektrik ist gemäß Prinzipschaltbild unter Berücksichtigung der **örtlichen Schutzbestimmungen** vorzunehmen.
- **Spannungs- und Frequenzangaben** auf dem Typenschild sind mit den Daten des Stromnetzes zu vergleichen; der Motor darf nur bei Übereinstimmung angeschlossen werden.
- Schaltung der **Anschlußklemmen** ist gemäß **Anweisung auf dem Deckel des Klemmenkastens** vorzunehmen.
- Vertauschte Anordnung führt bei Y/Δ–Schaltung zu Kurzschluß, bei PW–Motoren zu gegenläufigen oder im Phasenwinkel verschobenen Drehfeldern und dadurch zu Blockierung.
- Klemmen 1-2/3-4/B1-B2 an **Verdichter und Motorschutzgerät** dürfen nicht mit Steuer– oder Betriebsspannung in Berührung kommen.

4.2 Elektronische Schutzeinrichtung INT 69 VS

ist im Anschlußklemmenkasten fest eingebaut, die Meßleitungen für Motor–PTC sind verdrahtet. Anschluß gemäß Prinzipschaltbild bzw. Techn. Info Nr. 20.

4.3. Elektronische Schutzeinrichtung INT 389

(Sonderzubehör –auch nachrüstbar–) Anschluß gemäß Techn. Info Nr. 21.

4. Electrical connection

4.1 General recommendations

- The electrical installations should be made according to the wiring diagram and with consideration to **local electrical safety** regulations.
- **Voltage and frequency data** on the name plate should be compared with the electrical supply data only when these agree should the motor be connected.
- The arrangement of the **motor connections** should be made according to the **recommendations of the connecting box cover.**
- Incorrect connection results with Y/Δ switching in a short circuit, with PW motors in opposite fields of rotation or in out of phase fields of rotation and as a consequence locked rotor conditions.
- The terminals 1-2/3-4/B1-B2 on **the compressor and the motor protection** device must not come into contact with the supply voltage or control voltage.

4.2 Electronic protection device INT 69 VS

is mounted inside the electrical connection box, and the cables for the PTC motor sensors are already connected. Other connections should be made according to the wiring diagram resp. Technical Info No. 20

4.3 Electronic protection device INT 389

(special accessory can also be retrofitted). Connections according to Technical Info No. 21

4. Raccordement électrique

4.1 Indications générales

- L'exécution de l'installation électrique est à réaliser conformément au schéma de principe
  Il faudra cependant respecter les **prescriptions de sécurité locales.**
- Les **indications concernant la tension et la fréquence** portées sur la placque signalétique sont à comparer à celles du réseau. Le moteur ne peut être raccordé que s'il y a concordance.
- Le raccordement aux **bornes** de la plaque à bornes est à réaliser **conformément aux indications données sur le couvercle du boîtier de connexion.**
- Au cas d'interversion, pour un démarrage étoile-triangle il se produira un court-circuit. Pour des moteurs PW cela conduira à des champs tournants en opposition, à un décalage de phase de ceux-ci, c'est-à-dire à un blocage.
- Les bornes 1-2/3-4/B1-B2 **du compresseur et de l'appareillage de protection** ne doivent en aucun cas être mises en contract avec la tension de service ou de commande.

4.2 Dispositif de protection électronique INT 69 VS

Il est fixé à demeure dans le boîtier de connexion. La filerie de raccordement des sondes PTC du moteur est en place. Le raccordement se fait conformément au schéma de principe, respectivement à notre Information Technique No. 20.

4.3 Dispositif de protection électronique INT 389

Equipement spécial qui peut aussi être ajouté ultérieurement. Raccordement conformément à notre Information Technique No.21.

4.4 **Druckgasüberhitzungsschutz**
(Sonderzubehör –auch nachrüstbar–)
Das Fühlerelement ist am HP–Anschluß eines Zylinderkopfes ohne Leistungsregelung zu installieren.
Bei Verdichtern mit integrierter Anlaufentlastung ist der mit dieser Ausrüstung versehene Zylinderkopf dafür zu wählen.
Diese Meßleitungen werden in Reihe zu den Motor–PTC geschaltet.

4.5 **Öldrucksicherheitsschalter**
für Verdichter mit Ölpumpe (ab 2 U-3.2 / BHS 502).
Elektrischer Anschluß sowie Hinweise zur Funktionsprüfung siehe Prinzipschaltbild und beiliegende Beschreibung.

4.4 **Discharge gas temperature overheating protection**
(special accessory can also be retrofitted). The sensor element should be fitted to the HP connection of a cylinder head without capacity control. For compressors with integrated start unloading cylinder head fitted with this equipment should be the used.
The sensor cable should be connected in series with the motor PTC sensors.

4.5 **Oil pressure safety switch**
for compressors with oil pump (from 2 U-3.2 / BHS 502).
For electrical connections and functions testing see wiring diagram and description included with the devise.

4.4 **Dispositif de protection contre la surchauffe du gaz sous pression**
Equipement spécial qui peut aussi être ajouté ultérieurement. La sonde est à installer à la sortie H.P. d'une tête de cylindre sans régulation de puissance.
Dans le cas de compresseurs disposant d'un délestage au démarrage intégré il faudra choisir la tête de cylindre qui est equipé de ce dispositif.
Les dispositifs de mesure sont à connecter en série avec les sondes PTC du moteur.

4.5 **Pressostat de sécurité d'huile**
pour compresseurs équipés d'une pompe à huile (à partir de 2 U-3.2/ BHS 502).
Raccordement électrique et instructions relatives au contrôle de bon fonctionnement: veuillez vouz reporter au schéma de principe et à la description ci-jointe.

Anschlußpositionen für Öldrucksicherheitsschalter/Connection positions for oil pressure safety switch/ Emplacement des raccords pour pressostat de sécurité d'huile

2 U-3.2 bis/to/à 4 N-20.2
(BHS 502 bis/to/à 2402)

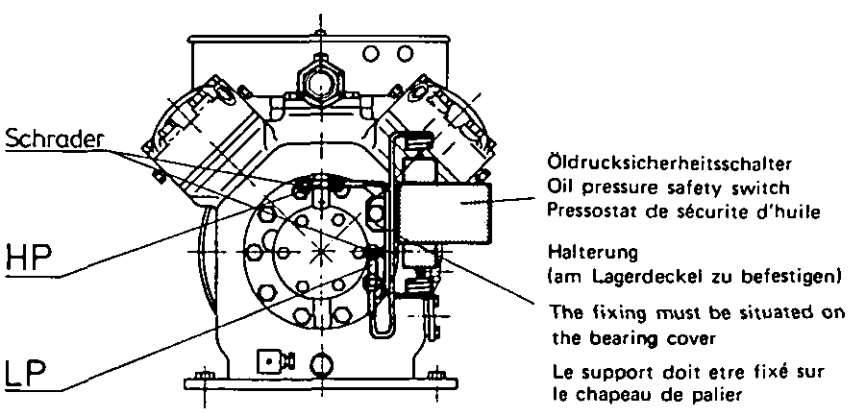

ab/to/à 4 M-10.2
(ab/to/à 4 M-10)

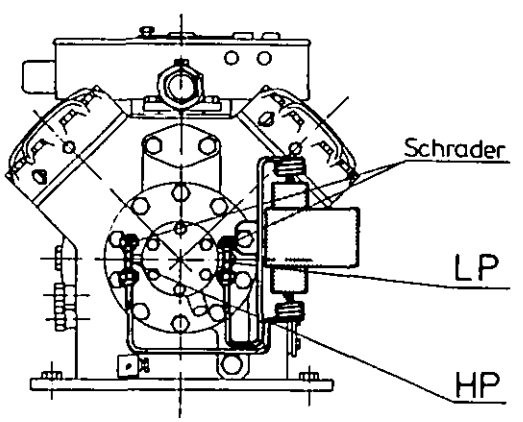

Achtung! Fachgerechte Verlegung der Kapillarrohre ist wegen Bruchgefahr sehr wichtig.
Attention! Correct running of capilliary tubes is very important to avoid the danger of breakage.
Attention! Une mise en place convenable des capillaires est d'une très grande importance pour éviter leur rupture

4.6 **Pressostate (HD + ND)**
sind erforderlich, um den Einsatzbereich des Verdichters so abzusichern, daß keine unzulässigen Betriebsbedingungen auftreten können.
Anschlußpositionen siehe Abschnitt 6
Achtung !
Unfallverhütungsvorschriften beachten.

4.7 **Ölsumpfheizung**
verhindert bei längeren Stillstandsperioden eine übermäßige Anreicherung des Öls mit Kältemittel (verminderte Schmierfähigkeit).
Anschluß gemäß Prinzipschaltbild.

4.6 **Pressure controls (HP + LP)**
are necessary in order to limit the operating range of the compressor so that no unpermissible operating conditions can occur.
For position of connections see section 6
Attention !
Observe rules for safety and the prevention of accidents.

4.7 **Crankcase heating**
prevents excessive concentration of refrigerant in oil during off periods (reduced lubrication properties)
Connections are according to the wiring diagram.

4.6 **Pressostat (haute – et basse pression)**
Ils sont indispensables pour contrôler la plage de fonctionnement du compresseur et s'assurer que des conditions de fonctionnement anormales soient exclues .
Les emplacements de ceux-ci sont indiqués au paragraphe 6.
Attention !
Il y a lieu de respecter les prescriptions de sécurité.

4.7 **Le chauffage du carter à huile**
évite en cas d'arrêt prolongé une accumulation excessive de fluide frigorigène dans l'huile, qui aurait pour conséquence une lubrification diminuée. Raccordement conformément au schéma de principe.

5. Inbetriebnahme

5.1 Dichtheitsprüfung/Evakuieren

Achtung !

Verdichter nicht im Vakuum starten.
Im Anschluß an die Dichtheitsprüfung (N_2 oder Kältemittel) ist das System einschließlich Verdichter (wegen Schutzgasfüllung) mit der Vakuumpumpe auf Saug– und Hochdruckseite zu evakuieren („stehendes" Vakuum <1,5 mbar bei abgesperrter Pumpenleistung, etwaige Absperr– oder Magnetventile geöffnet). Nach Spülung mit Kältemittel ist dieser Vorgang –ggf. mehrfach– zu wiederholen.

5.1 Dichtheitsprüfung/Evakuieren

Im Anschluß an die Dichtheitsprüfung (vorzugsweise N_2 -getrocknet-) ist das System einschließlich Verdichter (wegen Schutzgasfüllung) mit der Vakuumpumpe auf Saug- und Hochdruckseite zu evakuieren ("stehendes" Vakuum<1,5 mbar bei abgesperrter Pumpenleistung, etwaige Absperr- oder Magnetventile geöffnet). Diesen Vorgang –ggf. mehrfach– wiederholen.

Achtung!

- **Verdichter nicht im Vakuum starten**
- **Verdichter ist sorgfältig getrocknet, auf Dichtheit geprüft und mit Schutzgas (N_2) befüllt.**
  Bei Dichtheitsprüfung des Systems mit getrockneter Luft darf der Verdichter –wegen Auswirkungen auf die Ölstabilität– nicht einbezogen werden (Absperrventile geschlossen halten).

5.2 Kältemittelfüllung

Vor Befüllung bzw. Inbetriebnahme ist der Ölstand im Verdichter zu kontrollieren und die Ölsumpfheizung einzuschalten.
Das Kältemittel wird –bei abgeschalteter Maschine– flüssig direkt in den Verflüssiger bzw. Sammler (evtl. auch in den Verdampfer bei überflutetem System) gefüllt.
Eine nach Inbetriebnahme erforderlich werdende Ergänzung kann entweder gasförmig in die Saugseite oder –unter entsprechenden Vorsichtsmaßnahmen– auch flüssig am Verdampfereingang eingespeist werden.

Achtung !

Nicht flüssig über die Saugseite befüllen.

5.3 Kontrollen vor dem Start

- Ölstand (im markierten Schauglasbereich)
  Bei Verdichteraustausch kann es –wegen des bereits im Kreislauf

5. Commissioning

5.1 Leaktesting/Evacuation

Attention!

Do not start the compressor under vacuum.
After testing for leaks (with N_2 or refrigerant) the system including the compressor (because of protective gas charge) should be evacuated with a vacuum pump connected to high and low pressure sides (standing vacuum of < 1,5 mbar with vacuum pump shut off and any shut off valves or solenoid valves open). After flushing with refrigerant this procedure should be (when necessary severel times) repeated.

5.1 Leaktesting/Evacuation

After testing for leaks (preferably with dry N_2) the system including the compressor (because of protective gas charge)should be evacuated with a vacuum pump connected to high and low pressure sides (standing vacuum of <1,5 mbar with vacuum pump shut off and any shut off valves or solenoid valves open). This procedure should be repeated (when necessary severel times).

Attention!

- **Do not start compressor under vacuum**
- **The compressor is thoroughly dried, tested for leaks and filled with protective gas (N_2).**
  When testing the system for leaks with dry air, the compressor service valves should be kept closed so that the compressor is not included, in order not to affect the stability of oil.

5.2 Refrigerant charging

Before charging resp. running, the oil level in the compressor should be checked and the crankcase heater switched on.
The refrigerant should be charged (with compressor switched off) directly in liquid form into the condenser or receiver (possibly also evaporator with flooded system).
Any further refrigerant required after start up can either be charged in gas form into the suction side or with the necessary safety measures also as liquid at the evaporator inlet.

Attention!

Liquid refrigerant must not be charged into the suction side.

5.3 Checks before starting

Oil level (in area marked on sightglass).
When changing a compressor it may be necessary to drain a part

5. Mise en Service

5.1 Essai d'étanchéité/Tirage à vide

Attention !

Nes pas démarrer un compresseur sous vide.
Après avoir effectué l'essai d'étanchéité (N_2 ou fluide frigorigéne) le systéme dans son ensemble avec compresseur (à cause de son remplissage avec un gaz de protection) est à tirer à vide côté aspiration et haute pression à l'aide de la pompe à vide (vide résiduel <1,5 mbar, la conduite étant obturée, les vannes d'arrêt ou électro-vannes éventuelles ouvertes).
Après rinçage à l'aide de fluide frigorigène, ce processus est à répéter– éventuellement à plusieurs reprises.

5.1 Essai d'étanchéité/Tirage à vide

Aprés avoir effectué l'essai d'étanchéité (de préférence N_2 déshydraté) le systéme dans son ensemble avec compresseur (à cause de son remplissage avec un gaz de protection)est à tirer à vide côté aspiration et haute pression à l'aide de la pompe à vide (vide résiduel <1,5 mbar, la conduite étant obturée, les vannes d'arrêt ou électro-vannes éventuelles ouvertes). Ce processus est à répéter—éventuellement à plusieurs reprises

Attention!

- **Ne pas mettre le compresseur en route sous vide**
- **Le compresseur est soigneusement séché et son étanchéité est contrôlée à l'aide d'un gaz neutre de protection (N_2). Lors du contrôle d'étanchéité du systéme avec de l'air déshydraté, les vannes d'isolement du compresseur doivent rester fermées; ceci afin d'éviter toute répercussion sur la stabilité de l'huile.**

5.2 Remplissage de fluide frigorigène

Avant remplissage respectivement mise en service, le niveau d'huile du compresseur doit être contrôlé.
Il faut aussi mettre en service le chauffage du carter à huile.
Le fluide frigorigène est introduit sous forme liquide directement dans le condenseur, respectivement le réservoir de liquide (éventuellement aussi dans l'évaporateur pour les systèmes noyés) – le compresseur étant en arrêt.
Si une adjonction devait être nécessaire aprés la mise en service, elle peut être introduite soit sous forme gazeuse côté aspiration soit sous forme liquide à l'entrée de l'évaporateur en prenant bien entendu les précautions d'usage.

Attention !

Ne pas faire le remplissage en liquide côté aspiration.

5.3 Contrôles à effectuer avant le démarrage

- Niveau d'huile, devant se situer dans la plage marquée sur le voyant de contrôle.

befindlichen Öls– erforderlich sein, einen Teil der Ölfüllung abzulassen.
- Öltemperatur (ca. 15-20 K über Umgebungstemperatur bzw. saugseitiger Sättigungstemperatur).
- Sicherheitseinrichtungen
- Sollwerte der Zeitrelais
- Verzögerungszeit des Öldrucksicherheitsschalters

5.4 Schmierung / Ölkontrolle

Unmittelbar nach dem Start ist die Schmierung des Verdichters zu kontrollieren.
- Ölstand 1/4 bis 3/4 Schauglashöhe
- Bei Pumpenschmierung –ab 2 U-3.2/BHS 502– zeigt ein gegen das Schauglas gerichteter Ölstrahl die richtige Funktion des Ölumlaufsystems.
- Öldruckkontrolle mittels Manometer –ab 2 U-3.2/BHS 502– ist im Bedarfsfall über Schraderanschlüsse an der Ölpumpe möglich. Öldifferenzdruck (Sollwert): 1,4 bis 3,5 bar min. zulässiger Ansaugdruck (Saugseite Ölpumpe): 0,4 bar.
- Automatische Überwachung durch Öldrucksicherheitsschalter. Bei Sicherheitsabschaltungen des Gerätes ist eine Störanalyse vorzunehmen. (Hinweise auf dem Deckel des Öldrucksicherheitsschalters beachten).

Achtung !
Wenn größere Ölmengen nachgefüllt werden müssen, besteht Gefahr von Flüssigkeitsschlägen; die Ölrückführung muß dann überprüft werden.

5.5 Ölwechsel

ist bei fabrikmäßig gefertigten Anlagen nicht zwingend. Im Falle von „Feldinstallationen" oder Einsatz im Bereich der Einsatzgrenze empfiehlt sich ein erstmaliger Wechsel nach ca. 100 Betriebsstunden, dann alle ca. 3 Jahre bzw. 10 – 12000 Betriebsstunden.

Ölsorte BITZER B5

Verwendung von anderen Schmierstoffen gemäß Techn. Info Nr. 24 ist unter Berücksichtigung der entsprechenden Hinweise möglich.

of the oil filling due to oil already in the circuit.
- Oil temperature (approx. 15-20 K above ambient temperature resp. suction side saturation temperature).
- Safety devices
- Setting of time relays
- Delay time of oil pressure safety switch

5.4. Lubrication/oil check

Immedeately after starting the compressor lubrication should be checked.
- Oil level 1/4 to 3/4 height of sight glass.
- With oil pump lubrication –from 2 U-3.2/BHS 502– a jet of oil directed against the sight glass indicates correct functioning of the oil system.
- The oil pressure can be checked –from 2 U-3.2/BHS 502– when necessary by means of a gauge connected to the Schrader valves on the oil pump.
  Differential oil pressure (correct valves): 1,4 to 3,5 bar, minimum permissible inlet pressure (suction side of oil pump): 0,4 bar.
  0,4 bar.
- Automatic monitoring through oil pressure safety switch. When this device cuts out the system must be checked for faults.

Attention!
When larger quantities of oil have to be added the danger of slugging exists, the oil return should be checked.

5.5 Oil changing

is not normally necessary for factory assembled plants. For field installations and applications near the operating limits a first oil change is recommended after approx. 100 running hours and then approx. every 3 years resp. 10–12000 running hours.

Oil type BITZER B5

The use of other lubricants according to the recommendations made in Technical Information No. 24 is also possible.

En cas de remplacement du compresseur il peut s'avérer nécessair de vidanger partiellement l'huile, étant donné le volume de celle-ci qui se trouve déjà présent dans le cicuit.
- Température d'huile (environ 15 – 20 K au-dessus de la température ambiante, respectivement celle de saturation côté aspiration).
- Dispositifs de sécurité
- Réglage des relais de temporisation
- Durée du retard du pressostat de sécurité d'huile.

5.4 Lubrification / Contrôle d'huile

La lubrification du compresseur doit être contrôlée immédiament après son démarrage.
- Niveau d'huile: doit se situer dans une plage de 1/4 à 3/4 de la hauteur du voyant.
- Pour les machines lubrifiées par pompe à huile –à partir du type 2 U-3.2/BHS 502– un jet d'huile dirigé contre le voyant indique le bon fonctionnement du systéme de circulation d'huile.
- Le contrôle de la pression d'huile à l'aide d'une manomètre –à partir du type 2 U-3.2/BHS 502– est possible en cas de besoin par l'utilisation de raccords Schrader à la pompe à huile. Pression différentielle d'huile (valeur nominale): 1,4 à 3,5 bar, pression d'aspiration minimale acceptable (côté aspiration pompe à huile): 0,4 bar.
- Contrôle automatique à l'aide du pressostat de sécurité d'huile. En cas de déclenchement sur défaut de l'appareil, il y a lieu d'effectuer une analyse des causes. (Prière de se reporter aux instructions apposées sur le couvercle du pressostat de sécurité d'huile).

Attention !
Si des quantités importantes d'huile doivent être ajoutées, il existe un risque de coups de liquide. Il faut effecteur un contrôle du retour d'huile dans ce cas.

5.5 Remplacement de l'huile

Celui-ci ne s'impose pas pour des installations réalisées en usine. Dans le cas d'installations réalisées sur le site ou bien de celles fonctionnant dans les limites d'utilisation, il est conseillé de faire une première vidange après 100 heures de service, puis toutes les 10 à 12000 heures respectivement tous les 3 ans.

Qualité de l'huile: BITZER B5

L'utilisation d'autres lubrifiants est également possible à condition de respecter les instructions contenues dans l'Information Technique No. 24.

6. Anschlüsse / Connections / Raccords

BHS 171 / 191 / 231 / 351 / 491

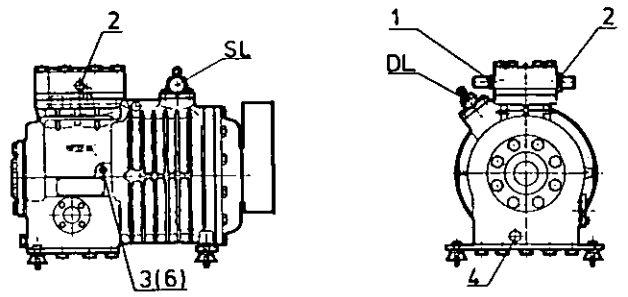

2 U-3.2 / 2 U-5.2 / 2 Q-4.2 / 2 Q-6.2
(BHS 502 / 592 / 802 / 962)

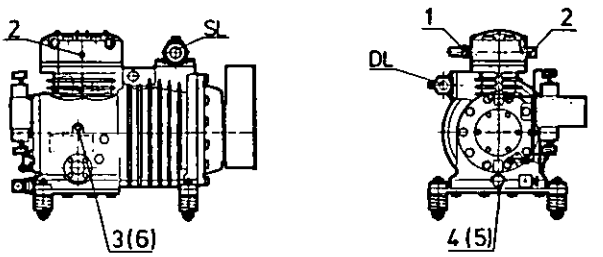

4 Z-5.2 bis/to/à 4 N-20.2
(BHS 752 bis/to/à 2402)

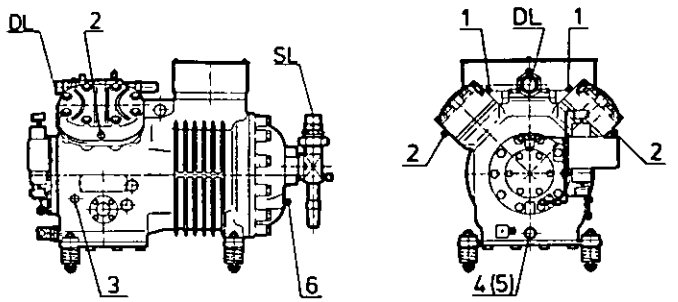

4 J-13.2 bis/to/à 4 G-30.2
(4 M-10 bis/to/à 4 G-30)

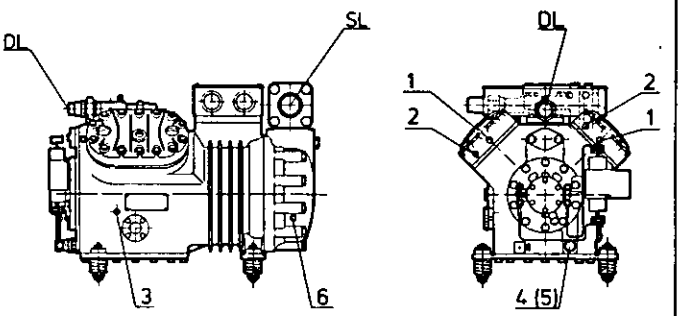

6 J-22.2 bis/to/à 6 G-40.2
(6 M-20 bis/to/à 6 G-40)

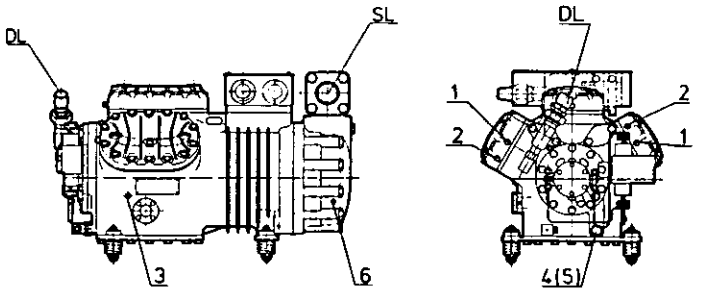

6 F-40.2 / 6 F-50.2

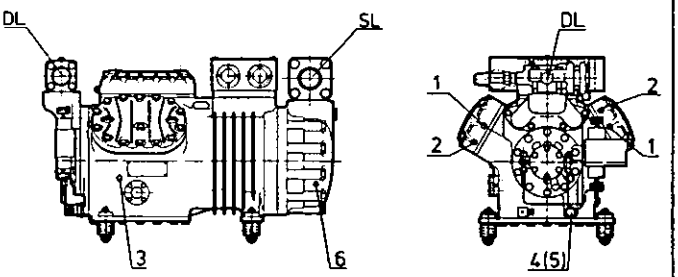

Tandem

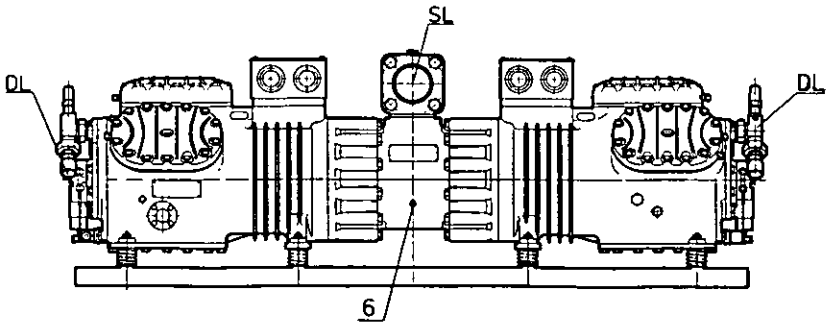

Sonstige Anschlüße wie beim entsprechenden Einzelverdichter

Other connections like for the corresponding single compressor

Les autres raccords comme pour le compresseur individuel correspondant

Anschlußpositionen
1 Hochdruckpressostat (HP) oder Druckgasüberhitzungsschutz (siehe Hinweise Abschnitt 4.4)
2 Niederdruckpressostat
3 Öleinfüllstopfen
4 Magnetstopfen (Ölablass)
5 Ölfilter
6 Ölrückführung (Ölabscheider)

Position of connections
1 Highpressure control (HP) or discharge gas overheating control (see recommandation section 4.4)
2 Lowpressure control (LP)
3 Oil fill plug
4 Magnetic plug (oil drain plug)
5 Oil filter
6 Oil return (oil separator)

Positionnement des raccords
1 Pressostat haute pression (HP) ou protection contre surchauffe anormale (voir les instructions au paragraphe 4.4)
2 Pressostat basse pression
3 Ouverture de remplissage d'huile
4 Bouchon magnétique pour vidange d'huile
5 Filtre à huile
6 Retour d'huile (séparateur d'huile)

Bitzer Kühlmaschinenbau GmbH & Co. KG
P.O. Box 240 · Eschenbrünnlestraße 15
D-7032 Sindelfingen

Telefon 07031/6107-0
Telex 7265852
Telefax 07031/6107-107

Technische Information

Technical Information

Information technique

Elektronisches Schutzgerät INT 69 VS

1. Funktionsbeschreibung:

Dieses Gerät dient zusammen mit den in der Motorwicklung und eventuell im Zylinderkopf befindlichen Kaltleiter-Temperaturfühlern (R2 + R3) zur Überwachung der Wicklungs- und Druckgastemperatur.
Eine eingebaute Wiedereinschaltsperre verhindert nach Abkühlen die selbsttätige Wiedereinschaltung des Verdichters und schließt Pendelschaltung aus.
Die Entriegelung erfolgt durch kurzzeitiges Unterbrechen der Anschlußspannung entweder mittels eines in die Zuleitung einzubauenden Entriegelungstasters (S1) oder durch Betätigung des Hauptschalters (Q1).

2. Elektrischer Anschluß:

Der elektrische Anschluß ist genau nach dem umseitigen Schaltbild vorzunehmen. Das Gerät bzw. der Steuerstrom über das Relais (Klemme 11-12-14) ist gegen Verschweißen im Kurzschlußfall mit einer Sicherung von max. 4A flink abzusichern.
Um die Sperrfunktion zu gewährleisten, ist das Motorschutzgerät als erstes Glied in der Steuerstromkette einzubauen.
Bei nicht oder fehlerhaft angeschlossenem Gerät erlischt jeglicher Garantieanspruch.

ACHTUNG !

Die Klemmen 1-2, B1-B2 am Motorschutzgerät sowie die Klemmen 3-4 am Klemmbrett des Verdichters dürfen keinesfalls mit Netzspannung (auch nicht 1phasig) in Berührung kommen.
Dies ist besonders beim Austausch von Verdichtern mit Wicklungsthermostaten zu beachten.

3. Funktionsprüfung

Bei Inbetriebnahme der Anlage sowie nach Störungen in der elektrischen Steuerung ist das Schutzgerät auf einwandfreie Funktion zu prüfen.
Zu diesem Zweck ist (im stromlosen Zustand der Anlage) einer der beiden Kabelabgänge an den Durchführungsbolzen 3 oder 4 am Verdichterklemmbrett zu lösen.
Nach Einschalten der Steuerung muß zwischen Klemme 12 und N Steuerspannung anliegen, bzw. Signallampe H2 aufleuchten.
Zwischen Klemme 14 und N darf keine Spannung anliegen.

4. Automatische Rückstellung:

Im **Ausnahmefall** (nicht bei Überwachung der Druckgastemperatur) kann die Sperrfunktion durch Entfernen der Brücke B1-B2 aufgehoben werden. Die Wiedereinschaltung erfolgt dann automatisch. Der Umbau ist nur zulässig, wenn geeignete Maßnahmen getroffen sind (z.B. Verzögerungsrelais K1T) um unzulässig hohe Schaltspiele des Verdichtermotors zu verhindern.

Hinweis:
Auf Wunsch ist das elektronische Schutzgerät INT 389 lieferbar (Technische Information Nr. 21).
Funktionen:
a) Überwachung der Kaltleiter (PTC-Temperaturfühler) mit Wiedereinschaltsperre
b) Überwachung von Phasenausfall und Phasenasymmetrie
c) Wiedereinschaltverzögerung um 5 Min. nach jeder Abschaltung des Verdichters.

Electronic protection device INT 69 VS

1. Description of functions:

This device is designed to monitor the temperature of the motor windings in combination with PTC resistances (R2) built into each motor winding. A further sensor (R3) can be fitted in the cylinder head to simultaneously monitor the discharge gas temperature.
After cool down **a built in lockout** prevents the compressor restarting and eliminates pendulum switching.
This can be reset by briefly interrupting the supply voltage either by means of the main switch (Q1) or by a reset pushbutton (S1) which can be installed in the supply line.

2. Electrical connections:

The electrical connections should be made according to the wiring diagram overleaf.
The device resp. the control current switched by the relay (terminals 11-12-14) must be protected by a quick blow fuse to prevent contacts welding in case of short circuit.
To guarantee that the lockout feature functions, this device should always be fitted as the first link in the control current chain.
No warranty claims can be accepted, if this device is not connected or incorrectly connected.

CAUTION !

Mains voltage (not even single phase) must never come into contact with terminals 1-2, B1-B2 on the protection device or terminals 3-4 on the compressor terminal board.
Special attention is necessary when replacing compressors with winding thermostats.

3. Testing the funktions

The correct operation of the protection device should be checked when commisioning the plant and after a fault situation in the electrical control circuit.
To do this (with the plant in a current free condition) remove one of the leads on either stud 3 or 4 on the compressor terminal board. When the control circuit is switched on the control voltage should appear between terminals 12 and N on the device and signal lamp H2 should come on. No voltage should appear between terminals 14 and N.

4. Automatic reset:

In exceptional cases (not with discharge gas temperature monitoring) the lockout funktion can be cancalled by removing the link B1-B2. Reset is then automatic. Conversion is only permissible if suitable measures are taken (e.g. start delay relay (K1T) to prevent the compressor switching too frequently.

Note:
An electronic protection device INT 389 is available on request (Technical Information No. 21).
Functions:
a) Monitoring PTC resistances with lockout
b) Monitoring phase asymmetry and phase failure
c) Restart delay of 5 minutes after each time compressor switches off.

Dispositif de protection électronique INT 69 VS

1. Description de la fonction:

Cet appareil sert à contrôler la température du bobinage et celle du gaz de refoulement à l'aide de sondes de température à résistances PTC (R2 + R3) qui se trouvent dans le bobinage et éventuellement dans la tête de culasse.
Un blocage de réenclenchement incorporé à l'appareil évite une remise en service automatique du compresseur aprés refroidissement et empêche tout fonctionnement pendulaire.
Le réarmement doit être opéré manuellement en interrompant pendant un bref instant la tension d'alimentation soit à l'aide d'un bouton-poussoir de réarmement (S1) à introduire dans la ligne d'alimentation, soit en manoeuvrant l'interrupteur général (Q1).

2. Raccordement électrique:

Le raccordement électrique est à réaliser conformément au schéma de principe au verso
Le dispositif resp. la tension de commande par le relais (bornes 11-12-14) doit être pourvu d'un fusible de F4A maxi pour éviter le soudage des contacts en cas de court-circuit.
Pour assurer la fonction de blocage, l'appareil de protection est à incorporer dans la chaine du circuit de contrôle comme premier maillon de celui-ci. Au cas où l'appareil ne serait pas raccordé ou de manière incorrecte, la garantie est annulée.

ATTENTION !

Les bornes 1-2, B1-B2 de l'appareillage de protection moteur ainsi que les bornes 3-4 sur la plaque à bornes du compresseur ne doivent en aucun cas entrer en contact (même pas sur un conducteur) avec le réseau.
Faire tout particulièrement attention lors du remplacement de compresseurs avec thermostats de bobinage.

3. Contrôle des fonctions

Lors de la mise en marche de l'installation et aprés des perturbations dans la commande électrique il faut vérifier le fonctionnement parfait du dispositif de protection.
Dans ce but (l'installation étant hors tension) il faut débrancher l'un des deux câbles aux goujons 3 on 4 sur la plaque à bornes.
Aprés mise sous tension des circuits de commande la tension de commande est présente entre bornes 12 et N et la lampe temoin H2 s'éclaire. Entre bornes 12 et N la tension no doit pas être présente.

4. Réenclenchement automatique:

En éliminant le pont B1-B2 (non tolérable dans le cas de contrôle de la température du gaz de refoulement) on peut supprimer **exeptionnellement** le blocage de réenclenchement. Dans ce cas le réenclenchement se fait automatiquement. Cette transformation n'est autorisée que si l'on a pris des mesures appropriées (par exemple relais retardé (K1T) afin d'éviter une trop rapide cadence d'enclenchement du moteur.

Remarque:
L'appareil de protection électronique INT 389 peut être livré sur demande (Information Technique No. 21).
Fonctions:
a) Contrôle des sondes de température à résistances PTC avec interdiction de réenclenchement
b) Controle de manque ou de l'asymétrie de phase
c) Temporisation du réenclenchement de 5 minutes aprés chaque arrêt du compresseur.

5. Technische Daten

Betriebsspannung: 220V $^{+10\%}_{-15\%}$, 50/60 Hz

Relais:	Schaltspannung 250V~ Dauerstrom max. 5 A Schaltvermögen 300 VA
Zul. Umgebungs-temperatur:	−30° C...+60° C
erf. Sicherung:	4 A flink
Schutzart:	Gehäuse IP 32 Klemmen IP 00

5. Technical Data

Operating voltage: 220V $^{+10\%}_{-15\%}$, 50/60 Hz

Relay:	Switch voltage 250V ~ Continuous current max. 5 A Switch capacity 300 VA
Ambient temperature:	−30° C...+60° C
Fuse required:	4 A quick blow
Protection:	Housing IP 32 Terminals IP 00

5. Caractéristiques techniques

Tension nominal: 220V $^{+10\%}_{-15\%}$, 50/60 Hz

Relais:	Tension 250V ~ Courant permanent 5A au max. Puissance de coupure 300 VA
Temperature ambiante:	−30° C...+60° C
Fusible:	F 4 A
Classe deprotection:	boîtier IP 32 bornes IP 00

6. Prinzipschaltbild

Direktanlauf, Thermostatische Steuerung

6. Wiring diagram

Direkt starting, thermostat control

6. Schéma de principe

Démarrage direct, commande thermostatique

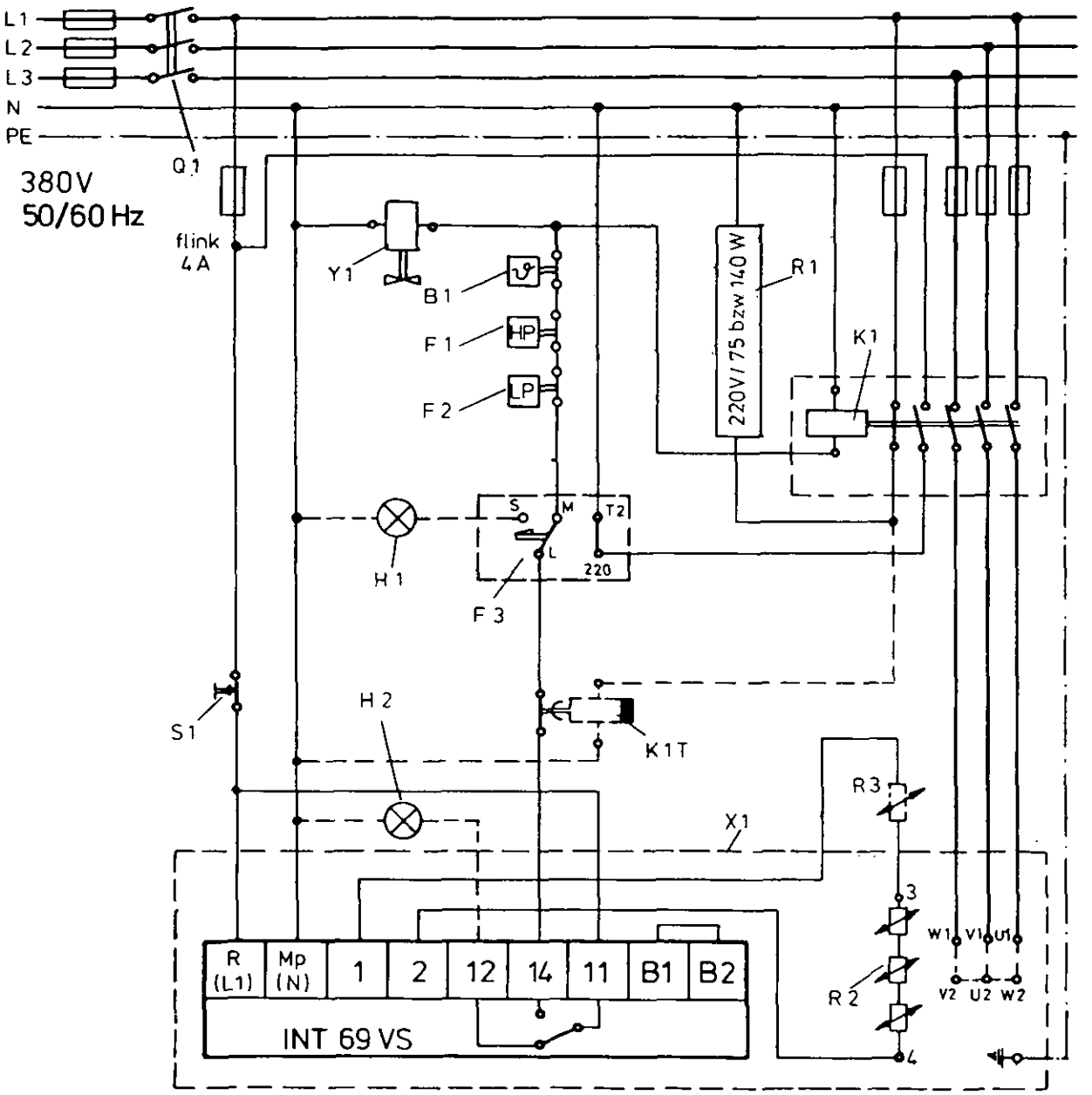

B1	Thermostat
F1	Hochdruckpressostat
F2	Niederdruckpressostat
F3	Öldrucksicherheitsschalter
H1	Signallampe "Öldruckstörung"
H2	Signallampe "Übertemperatur"
K1	Motorschütz
K1T	Zeitrelais zur Wiedereinschalt-verzögerung
Q1	Hauptschalter
R1	Ölsumpfheizung
R2	Kaltleiter (PTC)-Temperaturfühler in Motorwicklung
R3	Kaltleiter (PTC)-Temperaturfühler im Zylinderkopf
S1	Entriegelungstaster
X1	Anschlußkasten bzw. Verdichter-klemmbrett
Y1	Magnetventil (Flüssigkeitsleitung)

B1	Thermostat
F1	High pressure control
F2	Low pressure control
F3	Oil pressure safety switch
H1	Signal lamp "Oil pressure fault"
H2	Signal lamp "Over-temperature"
K1	Motor contactor
K1T	Start delay relay
Q1	Main switch
R1	Crankcase heater
R2	PTC resistances in motor windings
R3	PTC resistances in cylinder head
S1	Reset push button
X1	Connection box and compressor terminal board
Y1	Solenoid valve (liquid line)

B1	Thermostat
F1	Pressostat haute pression
F2	Pressostat basse pression
F3	Pressostat de sécurite d'huile
H1	Lampe témoin "manque de pression d'huile
H2	Lampe témoin "temperature excessive"
K1	Contacteur du moteur
K1T	Relais retardé pour temporisation au réenclenchement
Q1	Interrupteur général
R1	Résistance de carter
R2	Sondes de température à résistances PTC dans le bobinage
R3	Sondes de température à résistances PTC dans la tête de culasse
S1	Bouton-poussoir de réarmement
X1	Boîtier de raccordement resp' plaque à bornes du compresseur
Y1	Electro-vanne (conduite liquide)

3001 EDF
1989.03

BENZLERS

Gear units and geared motors
Stirnradgetriebe und Getriebemotoren
Réducteurs et moto-réducteurs

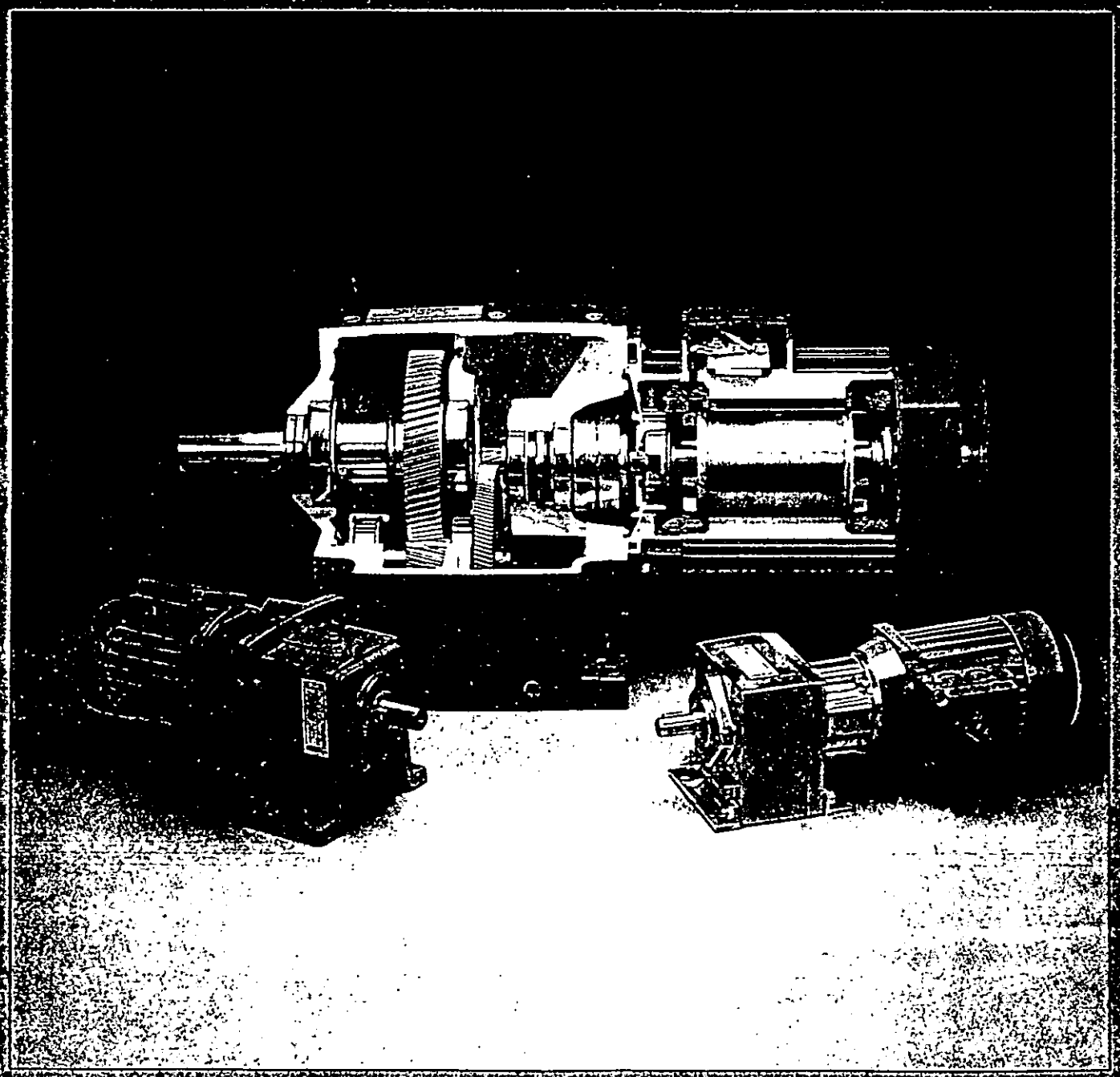

Mounting

1. The geared motor is lifted by a strap attached to the gear casing and the motor. Do not lift the geared motor by the motor lifting lug only.
2. The geared motor must be mounted on a flat and solid foundation.
3. Sprockets, pulleys, wheels or couplings to be fitted on shafts must not be hammered on, as this may damage the bearings. Coupling halves, etc must be heated up or on output shaft be pressed into position with a screw.
4. To avoid increasing load on shafts and bearings align the geared motor and driven machine carefully even when using an flexible coupling.

Maintenance

1. Both oil and grease should be replaced after approximatly 20 000 operations hours at an oil temperature of +60° C. If the oil temperature is higher or lower, the intervals between oil replacements will decrease or increase accordingly.
2. At cleaning, the gear housing should be flushed with the same sort of oil that is used under working conditions.
3. Check oil level at regular intervals. The oil should reach the correct oil level plug.
4. The geared motor must never be filled entirely with oil or grease irrespective of its mounting position.

Lubrication

1. BG 12 gears are delivered filled with a syntetic oil Mobil SHC 634. For normal conditions the supplied lubricant is for life.
   Ambient temperature -30°C to +30°C.
   All geared motors are normally delivered with oil according to mounting position specified by purchaser. If no mounting position is specified, geared motors will be supplied filled with oil for B3 mounting.
   Note that different mounting positions require different oil quantites.
2. The geared motors are normally delivered with oil type ISO VG 220, if nothing else is specified by purchaser.
3. The geared motors are provided with labels which indicate the mounting position and the grade of oil used.
4. The inner bearings are oil lubricated. The coupling shaft bearing and the outer bearing of the slow speed shaft are always lubricated with ball bearing grease.

Recommended oil in accordance with viscosity grade ISO VG:

Ambient temperature/oil type

-20° C	— +10° C	-ISO VG 32 EP
+ 5° C	— +30° C	-ISO VG 220 EP
-15° C	— +40° C Syntet	-ISO VG 150 EP

For grease lubricated gear units.
At an ambient temperature -15°C - +30° C: grease in accordance with NLGI 0-00.

For other ambient temperatures, consult BENZLERS.

N.B. Mineral oils must not be mixed with synthetic oil. Different grades of grease are, as a rule, not mixable.

Achtung! Mineralöle dürfen nicht mit synthetischen Ölen gemischt werden. Die Fette sind in der Regel nicht mischbar.

Attention! Les huiles minérales ne doivent pas être mélangées avec les huiles synthétiques. Il est, en principe, déconseillé de mélanger les graisses.

Montage und Inbetriebnahme

1. Das Stirnradgetriebe/der Stirnradgetriebemotor lässt sich am einfachsten mit einem um das Getriebegehäuse und den Motor geschlungenen Seil halten, da die Gewichtsverteilung in Abhängigkeit von z.B. der Motorgröße sehr variert. Ein Getriebemotor darf niemals ausschließlich an der Hebeöse des Motors gehoben werden.
2. Das Getriebe eignet sich für Fuß- oder Flanschmontage auf dem Boden, an der Wand oder an der Decke. Es ist auf ebener, verwindungssteifer Unterlage zu montieren, so daß beim Festziehen der Befestigungsschrauben keine mechanischen Spannungen enstehen.
3. Rad, Riemenscheibe oder Kupplung dürfen nicht mit Schlägen auf das Wellenende aufgetrieben werden, da das Getriebe hierdurch beschädigt werden kann. Statt dessen ist der betreffende Teil vor der Montage ja nach Sitzart auf 100 bis 150° C zu erwärmen. Die Wellenkupplung muß nach den für den bezüglichen Kupplungstyp erteilten Vorschriften einwandfrei ausgerichtet werden, da die Lebensdauer von sowohl Getriebe als auch Kupplung hiervon abhängig ist.
4. Um zusätzliche Lasten an Welle und Lagerung zu vermeiden sind auch bei Verwendung einer elastischen Kupplung Getriebemotor und angetriebene Maschine genau auszurichten.

Wartung

1. Das Öl bzw. das Fett ist bei einer normalen Schmiermitteltemperatur +60° nach etwa 20 000 Betriebsstunden zu wechseln. Bei höherer oder niedrigerer Temperatur wird das Schmiermittel in kürzeren bzw. längeren Zeitanständen gewechselt.
2. Bei der Gehäusereinigung soll das Gehäuse mit dem gleichen Öl wie im Betrieb gespült werden.
3. Der Ölstand ist regelmässig zu überprüfen. Das Öl soll bis zum Ölstandsstopfen reichen. Das Getriebe muss sich bei der Kontrolle natürlich in einer der Betriebslage entsprechenden Lage befinden.
4. Achtung: Das Gettriebe darf in keiner Betriebslage vollständig mit Öl oder Fett gefüllt werden.

Schmierung

1. BG 12 Getriebe werden mit einem Öl entsprechend Mobil SHC 634 geschmiert.
   Bei normalem Betrieb ist kein Ölwechsel notwendig. Umgebungstemperatur -30°C till +30°C.
   Das Stirnradgetriebe wird normalerweise mit Ölfüllung geliefert. Die Ölmenge ist der vom Besteller angegebenen Bauform (bzw. Betriebslage) angepasst. Fehlt diese Angabe, wird das Getriebe mit Öl für Bauform B3 (waagerechte Bodenaufstellung) geliefert.
2. Die Getriebemotoren werden normalerweise mit Öl Type ISO VG 220 geliefert, wenn vom Besteller nicht anders angegeben.
3. Auf einem Etikett am Getriebe ist die Betriebslage angegeben und auf dem Typenschild ist die Ölqualität eingetragen.
4. Die inneren Getriebelager werden durch das Schmiermittel des Getriebes geschmiert. Das äußere Lager (4) der niedertourigen Welle ist jedoch fettgeschmiert.

Empfohlenes Öl nach Viskosität ISO VG.
Umgebungstemperatur

-20° C	— +10° C	-ISO VG 32 EP
+ 5° C	— +30° C	-ISO VG 220 EP
-15° C	— +40° C Syntetisch	-ISO VG 150 EP

Für Stirnradgetriebe mit Fettschmierung.
Bei Umgebungstemperaturen von -15° C bis +30° C: Fett NLGI 0-00

Installations et mise en marche

1. Etant donné les variations de la réparatition de la masse, dues au poids en particulier, nous recommandons d'utiliser en général une élingue autour du carter du réducteur et du moteur pour soulever simplement les réducteurs/motoréducteurs. Toutefois, ne jamais soulever les motoréducteurs par oueillet de levage du moteur.
2. Les réducteurs peuvent être installés sur le sol, sur un mur ou au plafond avec un montage à pattes ou à bride. L'assise doit être plane et rigide afin d'éliminer les tensions mécaniques qui peuvent appraitre au moment du serrage des boulons de fixation.
3. Pour le montage d'une roue, d'une poulie ou accouplement sur le bout d'arbre ne pas utiliser un marteau à fin de ne pas endommager les pailers. Porter plutôt la pièce à la bonne température, selon l'ajustement désiré. Pour assurer une longue durée de vie et un long intervalle de service, veiller à ce que l'accouplement soit correctement aligné, conformément aux instructions données.
4. En cas d'un transmission avec un pignon de chaine, denté ou bien poulie à courroie il est recommandé de contrôler la charge sur l'arbre et de ne jamais dépasser la charge transversale permise.

Entretien

1. Pour une température d'huile ou de graisse normale de +60° C, remplacer l'huile ou la graisse après environ 20 000 heures de marche. Nous recommandons donc de choisir l'intervalle de remplacement en fonction de la température.
2. Il est nécessaire de rincer le carter avec la même huile que celle utilisée en service.
3. Vérifier régulièrement le niveau d'huile en s'assurant que les réducteurs sont dans la bonne position de montage. Le niveau d'huile doit arriver jusqu'au bouchon.
4. Attention! Ne jamais complètement remplir d'huile ou de graisse les réducterus.

Lubrification

1. Les réducteurs BG 12 sont livrés rempli d'huile synthétique, équivalentem á Mobil SHC 634. Dans les conditions dútilisation normales, les vidanges sont inutiles. Température ambiante -30°C á +30°C.Les réducteurs sont normalement livrés avec une quantité d'huile en fonction de la position de montage. Si aucune information n'est pas donnée à la commande, un montage horizontal sur sol (B3) est supposé et la quantité d'huile correspondante est fournie à la livraison.
2. Le moto-réducteur est normalement livré avec l'huile ISO VG 220, si aucune information n'est donnée à la commande.
3. Toutes les unités sont livrées avec une étiquette indiquant la position de montage et une plaque signalétique indiquant le type d'huile à utiliser.
4. Les paliers intérieurs sont lubrifiés avec l'huile des réducteurs. Les paliers extécontre, graissés. Les bords des bagues d'étanchéité sont graissés avec de la graisse pour roulements à billes, du type 7 1401-201.

Qualité d'huile recommandée conforme à la norme ISO VG.

Température ambiante		huile
-20° C	— +10° C	-ISO VG 32 EP
+ 5° C	— +30° C	-ISO VG 220 EP
-15° C	— +40° C Syntetique	-ISO VG 150 EP

Pour les réducteurs à graisser.
Pour une température ambiante de -15° C à +30° C. Graisse NLGI 0-00.
Pour les autres températures, prière de prendre contact avec BENZLER.

Instructions

WARNING
These units are for use in Industrial Compressed Air Systems only. They must not be used where pressure or temperature may exceed rated operating conditions. See specifications.

Form No. ENI. 107b 10/81

PRECISION REGULATORS

Series 11,400-2G and 20AL-X2G, 1/4 size.
Max. Line Pressure: 28 bar (400 p.s.i.) Max. Temp. 80°C (175°F)
Regulated pressure range as indicated on the unit.
For air flows up to 1 dm³/s (2 cfm.) Relieving Type.

Series 11-818 (B.S.P.), 11-018,(A.N.P. Dryseal.), 1/4 size.
Maximum Line Pressure 8, 10 or 14 bar (120, 150 or 200 p.s.i.) as indicated on Regulator label.
Operating Temperature Range 0° to 70°C (32°F to 160°F)

Series 11-824 (B.S.P.), 11-024 (A.N.P.), 1/4, 3/8, 1/2, 3/4, 1 and 1 1/4 sizes.
Max. Line Pressure: 28 bar (400 p.s.i.) Max Temp: 80°C (200°F).

INSTALLATION

Install as near as possible to the component being served. Do not use undersize piping or fittings which will restrict flow. Body or port markings indicate direction of air flow.

CAUTION: Do not cycle upstream pressure with quick opening valve.

Series 11,400, 20AL-X

Install a Norgren 25-micrometre filter or a PURAIRE filter immediately upstream.

Series 11-818, 11-018

Install a pressure gauge downstream, on a properly designed 'T' piece, and a Norgren PURAIRE or ULTRAIRE filter immediately upstream.

CAUTION: The remote sensing hole in the outlet port must not be obstructed by over-long connectors.

DO NOT REMOVE PIPE PLUG ABOVE INLET PORT

Series 11-824, 11-024.

In sizes up to 1/2", all three outlet ports can be used as secondary lines.

OPERATION

Series 11, 400, 20AL-X, 11-818, 11-018

Before admitting air pressure turn adjusting screw anti-clockwise until it is free of spring loading. Turn on air supply and rotate adjusting screw clockwise until desired pressure is shown on gauge.

Note: Settings made under 'no flow' conditions will change under conditions of flow and vice versa.

Series 11-824, 11-024.

Secondary pressure is controlled by turning the control knob. The knob can be set to stop at either a maximum or minimum pressure setting. To set the knob for a maximum pressure, turn to the desired pressure, press the spring loaded button in the knob then turn the knob clockwise until it stops. Release the button. Follow this procedure for a minimum pressure but turn the knob anti-clockwise.

Note: A small amount of air will escape from the bonnet on Series 11,400 and 20AL-X, through the pilot valve on Series 11-824 and 11-024 and from the relief outlet (when used on a dead-end installation) on Series 11-818 on 11-018.

PRECISIE-REGELAARS

Serie 11, 400-2G en 20AL-X2G, maat 1/4.
Voor luchtstromen tot max. 1 dm³/s
Ontlasttype. Max. leidingdruk: 28 bar
Max. temperatuur: 80°C.
Geregeld drukbereik aangegeven op regelaar.
Serie 11-818 (B.S.P.), 11-018 (A.N.P. Dryseal), maat 1/4.
Max. leidingdruk: 8, 10 of 14 bar, zoals aangegeven op fabrieksplaatje van regelaar.
Bedrijfstemperatuur tussen: 0°C–70°C.
Serie 11-824 (B.S.P.), 11-024 (A.N.P.), 1/4, 3/8, 1/2, 3/4, 1 en 1 1/4 maten.
Max. leidingdruk: 28 bar, Max. temperatuur: 90°C.

INSTALLATIE

Monteer zo dicht mogelijk bij de te bedienen uitrusting. Gebruik geen ondermaatse pijpen of fittingen aangezien deze de doorstroming zullen belemmeren. Merktekens op het huis of de poorten geven de richting van de luchstroom aan.

Waarschuwing: Gebruik geen snelopenende kleppen voor het teweegbrengen van veranderingen in de toevoerdruk.

Serie 11, 400, 20AL-X

Monteer een Norgren 25-Micron filter of een PURAIRE filter nabij de toevoer.

Serie 11-818, 11-018

Monteer een drukmeter in de afvoerleiding op een T-stuk van het juiste ontwerp en een Norgren PURAIRE of ULTRAIRE filter in de toevoerleiding.

Waarschuwing: Het controlegaatje nabij de uitlaatpoort mag niet bedekt worden door te lange pijpaansluitingen.

DE PIJPSTOP BOVEN DE INLAATPOORT NIET VERWIJDEREN.

Serie 11-824, 11-024

Bij maten tot 1/2" kunnen alle drie de uitlaatpoorten gebruikt worden als secundaire leidingen.

BEDIENING

Serie 11, 400, 20AL-X, 11-818, 11-018

Voordat de luchtdruk wordt ingeschakeld moet de stelschroef linksom worden gedraaid tot en geen veerdruk meer aanwezig is. Schakel de luchttoevoer in en draai de stelschroef rechtsom tot de gewenste druk door de meter wordt aangegeven.

N.B. Afstellingen die gemaakt worden 'buiten-bedrijf' zullen zich wijzigen tijdens gebruik van het apparaat, on omgekeerd.

Serie 11-824, 11-024.

De secundaire druk wordt geregeld met behulp van de regelknop. De knop kan worden vastgezet in de stand voor max. of min. druk. Voor max. druk draai de knop tot de gewenste druk is bereikt, druk de onder veerdruk staande drukker in de knop in en draai de knop vervolgens zover mogelijk rechtsom. Laat de drukker los. Voer dezelfde handelingen uit voor min. druk, maar draai dan de knop linksom.

N.B. Een kleine hoeveelheid lucht zal ontsnappen via het deksel bij serie 11, 400 en 20AL-X, door de hulpklep bij serie 11-824 en 11-026; en via de ontlastuitlaat (bij gebruik op een eindinstallatie) bij serie 11-818 en 11-018.

REGULATEURS DE PRECISION

Séries 11, 400-2G et 20AL-X2G, de 1/4.
Pour débits dair jusqu'à 1 dm³/s.
Type à échappement.
Pression max. sur la ligne: 28 bar.
Température max.: 80°C.
Pressions réglées selon les indications portées sur l'appareil.
Séries 11-818 (B.S.P.) et 11-018 (A.N.P. Dryseal), de 1/4.
Pression maximum en ligne: 8, 10 ou 14 bar comme l'indique l'étiquette du régulateur.
Températures de travail: 0°C à 70°C.
Series 11-824 (B.S.P.), 11-024 (A.N.P.), 11-02
Series 11-824 (B.S.P.), 11-024 (A.N.P.), de 1/4, 3/8, 1/2, 3/4, 1 et 1 1/4.
Pression max. en ligne: 28 bar.
Température max.: 90°C.

MONTAGE

Monter aussi près que possible des appareils à desservir. Ne pas se servir de tuyauterie et de raccords de trop faible diamètre, car ils éntrangleraient le débit d'air. Les flèches sur le corps de l'appareil indiquent la direction de l'écoulement de l'air.

ATTENTION: Ne pas faire circuler la pression dans le sens montant avec la soupape à ouverture rapide.

Series 11,400, 20AL-X

Monter immédiatement en aval un filtre Norgren de 25 microns ou un filtre PURAIRE.

Séries 11-818, 11-018

Monter, en avail, un manomètre sur un raccord en T proprement établi et, immédiatement en amont, un filtre Norgren PURAIRE ou ULTRAIRE.

Attention: Ne pas obstruer, par des raccords trop longs, l'orifice pour dispositif senseur à distance situé dans l'ouverture de sortie. NE PAS RETIRER LE BOUCHON DE TUYAU SITUE AU-DESSUS DES OUVERTURES D'ADMISSION.

Séries 11-824 et 11-024

Sur les modèles de 1/2" on peut utiliser ces orifices de sortie comme lignes secondaires.

FONCTIONNEMENT

Séries 11,400, 20AL-X, 11-818 et 11-018

Avant d'admettre l'air sous pression, tourner la vis de réglage dans le sens inverse des aiguilles d'une montre jusqu'à ce qu'elle ne soit plus comprimée par le ressort. Admettre l'air sous pression et tourner la vis dans le sens des aiguilles d'une montre jusqu'à ce que le manomètre indique la pression voulue.

Nota: Les réglages effectués sans circulation d'air varieront légèrement au rétablissement du débit et vice-versa.

Séries 11-824 et 11-024

Pour régler la pression secondaire, il suffit de tourner le bouton de contrôle. Le bouton peut être réglé de telle sorte qu'il s'arrête à une pression maximum ou minimum. Pour régler le bouton à une pression désirée, enfoncer le bouton-poussoir à ressort et tourner le bouton aussi loin que possible dans le sens des aiguilles d'une montre. Dégager le bouton—poussoir. Faire de même pour une pression minimum en tournant dans le sens inverse des aiguilles d'une montre.

Nota: Il y aura un faible échappement d'air au chapeau sur les modèles des séries 11,400 et 20AL-X; à la soupape pilote pour les modèles des séries 11-824 et 11-024 et à l'orifice d'échappement pour les modèles des séries 11-818 et 11-018 (quand ils sont montés sur des installations fermées).

PRÄZISIONSREGLER

Serien 11, 400-2G und 20AL-X2G, Grösse 1/4 Zoll
Max. Luftdurchsatz: 1 dm³/s
Mit Druckentspannung.
Max. Förderdruck: 28 bar
Höchsttemperatur: 80°C.
Regeldruckbereich wie auf Gerät angegeben.
Serien 11-818 (B.S.P.) und 11-018 (A.N.P. Dryseal), Grösse 1/4 Zoll.
Max. Leitungsdruck 8, 10 oder 14 bar wie auf Gerät angegeben.
Betriebstemperaturbereich von 0°C-70°C.
Serien 11-824 (B.S.P.), 11-024 (A.N.P.), Grössen: 1/4, 3/8, 1/2, 3/4, 1 und 1 1/4.
Max. Förderdruck: 28 bar.
Höchsttemperatur: 90°C.

EINBAU

So nahe wie möglich an der zu regelnden Ausrüstung einbauen. Leitungen und Fittings dürfen nicht zu klein bemessen werden, da dies zur Luftdrosselung führt. Markierungen auf Gehäuse oder Einlass zeigen die Durchflussrichtung an.

Achtung: Der Einlaßdruck darf nicht mit einem Schnellverschluß-Ventil geregelt werden.

DEC 1983.

OIL SEPARATORS

AC & R COMPONENTS INC.

O.D.S. CONNECTIONS ARE COPPER EXCEPT S-5700 SERIES WHICH ARE STEEL
450 P.S.I.G. WORKING PRESSURE

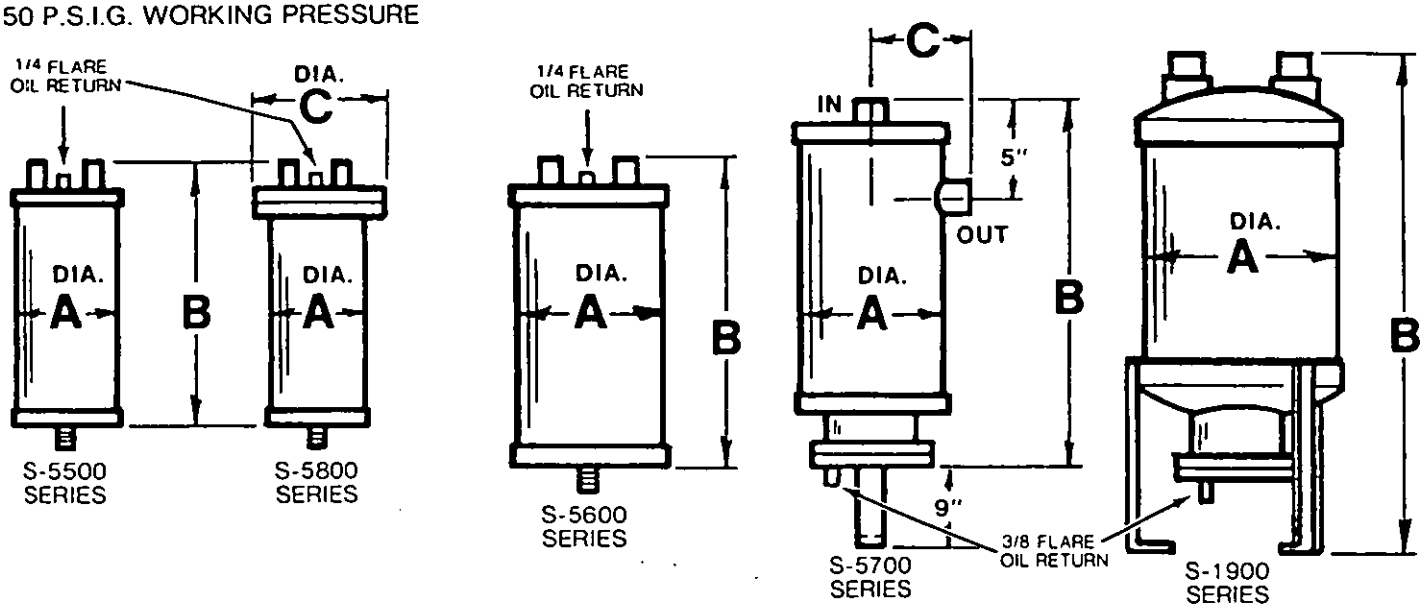

CATALOG NO.	OCI NO.	SIZE CONN.	DIMENSIONS-INCHES DIA. A	B	C	CAPACITY IN TONS OF REFRIGERATION AT EVAPORATOR TEMPERATURE R-12 — 40° F	R-12 + 40° F	R-22 — 40° F	R-22 + 40° F	R-502 — 40° F	R-502 + 40° F	TYPE NO.
S-5580	55800	1/4 ODS	4	8 1/4		1/2	3/4	3/4	1	3/4	1	
S-5581	55810	3/8 ODS		8 1/4		3/4	1	1	1 1/2	1	1 1/2	
S-5582	55820	1/2 ODS		10 1/4		1	1 1/2	1 1/2	2	1 1/2	2	
S-5583	55830	3/8 FPT		9 3/4		1	1 1/2	1 1/2	2	1 1/2	2	
S-5584	55840	1/2 FPT		14		3	4	4 1/2	5 1/2	4 3/4	5 3/4	
S-5585	55850	5/8 ODS		14 1/4		3	4	4 1/2	5 1/2	4 3/4	5 3/4	
S-5586	55860	3/4 FPT		17		4	5	5 1/2	6 1/2	6 1/2	7 1/2	
S-5587	55870	7/8 ODS		17 3/4		4 1/2	5 1/2	7	8	7 1/2	8 1/2	
S-5588	55880	1 1/8 ODS		21		6	7 1/2	9	10 1/2	9 1/2	11 1/2	
S-5590	55900	1 3/8 ODS		21 1/4		7 1/2	10	11 1/2	13 1/2	12	14 1/2	
S-5592	55920	1 5/8 ODS		21 3/4		8	11	12	14	13	15	
S-5882	58820	1/2 ODS	4	10 1/4	5 1/2	1	1 1/2	1 1/2	2	1 1/2	2	501
S-5885	58850	5/8 ODS		14 1/4		3	4	4 1/2	5 1/2	4 3/4	5 3/4	502
S-5887	58870	7/8 ODS		17 3/4		4 1/2	5 1/2	7	8	7 1/2	8 1/2	503
S-5888	58880	1 1/8 ODS		21		6	7 1/2	9	10 1/2	9 1/2	11 1/2	504
S-5890	58900	1 3/8 ODS		21 1/4		7 1/2	10	11 1/2	13 1/2	12	14 1/2	505
S-5892	58920	1 5/8 ODS		21 3/4		8	11	12	14	13	15	
S-5687	56870	7/8 ODS	6	11 1/4		6	8	9	10	9	11	
S-5688	56880	1 1/8 ODS		15 1/2		8	10	11	12	12	14	
S-5690	56900	1 3/8 ODS		15 3/4		9	12	13	14	15	20	
S-5692	56920	1 5/8 ODS		19		11	14	16	18	20	24	
S-5694	56940	2 1/8 ODS		19 1/2		17	22	25	30	30	35	
S-5792	57920	1 5/8 ODS	6	20 1/8	4 1/4	11	14	16	18	20	24	506
S-5794	57940	2 1/8 ODS		20 5/16	4 1/2	17	22	25	30	30	35	507
S-1901	19010	1 5/8 ODS	8	21		12	15	20	24	22	25	
S-1902	19020	2 1/8 ODS		21		20	25	30	35	35	40	
S-1903	19030	2 5/8 ODS	10	21 1/4		30	40	50	65	60	70	
S-1904	19040	3 1/8 ODS	12	25 1/2		50	60	75	90	80	100	

ALL THE CAPACITIES SHOWN ARE BASED ON 100°F CONDENSING TEMPERATURE AND 65°F SUCTION GAS TEMPERATURE AND ON CONNECTION SIZE BEING SAME AS COMPRESSOR DISCHARGE VALVE.

701 So. Main St.
Chatham IL 6262
(217) 483-2406

OIL SEPARATOR

INSTALLATION INSTRUCTION

1. **IMPORTANT**-Precharge OIL SEPARATOR with oil before installation (see chart).

Model No.:	Amount of Oil
S-5500 / S-5800 Series	15 oz
S-5600 Series	30 oz.
S-1900 / S-5700 Series	20 oz.

2. Install OIL SEPARATOR vertically between compressor and condensor, as close to compressor as possible.
3. Attach compressor discharge line to INLET connection of OIL SEPARATOR and OUTLET connection of OIL SEPARATOR to line leading to condensor.
4. The S.A.E. male flare connection is the oil return connection and should be piped back to the crankcase (oil filler plug), or to the inlet valve on the top of the OIL RESERVOIR if the OIL SEPARATOR is part of an OIL CONTROL system.
5. If the OIL SEPARATOR has a bottom stud, the stud must be in an opening large enough to receive the bolt and its weld fillet. Use as much of the bottom for bearing as is possible; this tends to arrest vibration. Tighten nut to 15 ft. pounds torque.

SOLDERING INSTRUCTIONS

1. The connections on most models are copper (except S-5700 Series) to permit fluxless brazing.
2. Use silver solder with a flow point no higher than 1250 deg. F.
3. Both inlet and outlet connections are fitted with fine mesh screens, care should be taken not to BURN the joint.
4. Flanged header OIL SEPARATORS (S-5800 Series) have a gasketed joint. The gasket will break down if heated over 300 deg. F. Place a wet rag on the header plate to keep it cool while soldering or brazing.

NEW INSTALLATION

The oil level in the crankcase should be rechecked after a few hours of operation and again in a few days. A new charge of refrigerant tends to pick up oil until the system is balanced out. The oil separator removes excess oil. Thus, oil loss from compressor crankcase will not be captured immediately.

OLD INSTALLATION

Oil may be out in the low side, it is essential that the oil level in the crankcase be checked after the oil has had a chance to return to the compressor and excess oil which has returned should be removed.

HEAT ELEMENTS

In low ambient conditions, a heat element can be fixed to the lower part of the oil separator to prevent migration and condensing of refrigerant gas in the oil separator.
Use 4" HEAT ELEMENT S-9101 or S-9111 on S-1900, S-5500, S-5700, S-5800 Series Oil Separators.
Use 6" HEAT ELEMENT S-9112 on S-5600 Series Oil Separators.

SERVICE INSTRUCTIONS

The S-5700 Oil Separators are completely serviceable. They have a removable float assembly, and screen cartridge assembly, which can either be replaced or cleaned. Please NOTE, this is only for periodic service and does not apply to a compressor burnout. If a burnout does occur, we recommend replacement of the float assembly and screen cartridge.

INSTRUCTION MANUAL

BENUTZER-HANDBUCH

MODE D'EMPLOI

MANUALE DI ISTRUZIONI

MASS FLOW METERS AND CONTROLLERS FOR GASES

Doc. no.: 9.02.052 C
Date: 03 - 06 - 1992

INSATECH Instrumentering

INSATECH A/S
Algade 133
DK-4760 Vordingborg

Telefon 53 77 20 95
Telefax 53 77 70 18

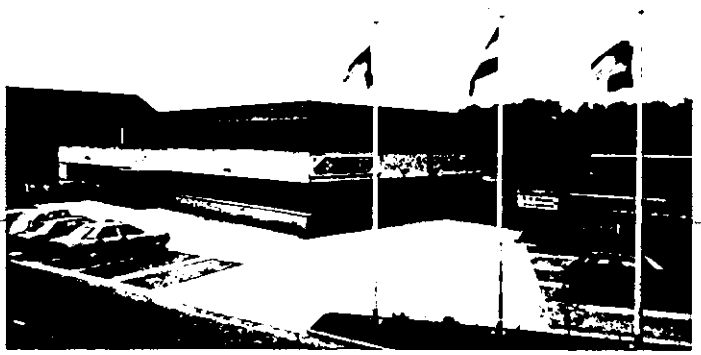

See the manual in the first book.

BRONKHORST HI-TEC

Nijverheidsstraat 1a - 7261 AK Ruurlo The Netherlands
Tel.: 05735-2929* - Tlx.: 49066 - Fax: 05735-3297

931711

Drives and Controls

Danfoss

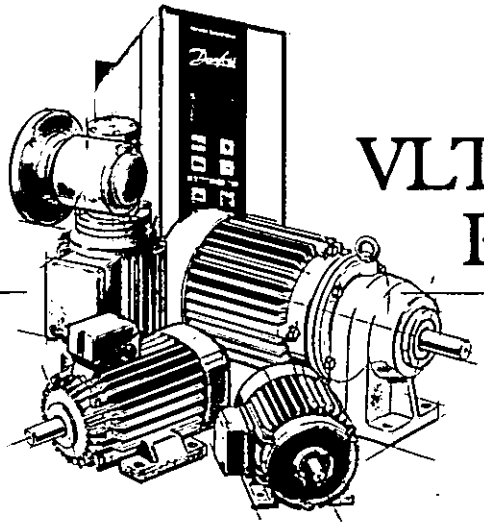

VLT® 2000 Series Product Manual

See the manual in the first book.

Drives and Controls

Danfoss

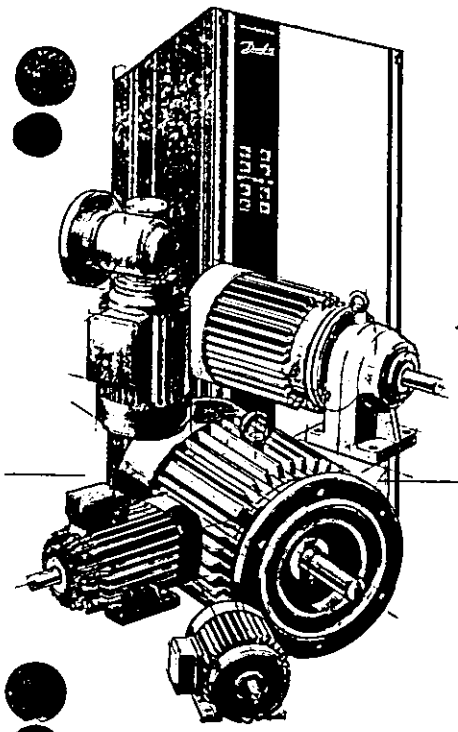

VLT® Series 3000 Product Manual

See the manual in the first book.

INSTRUCTIONS

KP 5, 5A

60R9512

KP 5: R 12, R 22, R 500, R 502

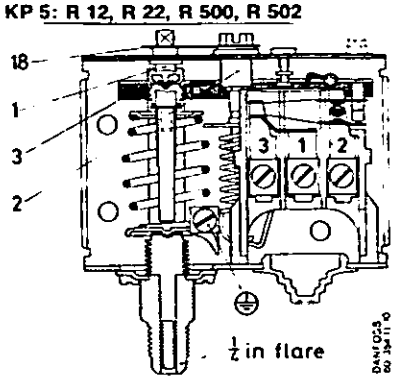

Fig. 1
KP 5

KP 5A: R 717 (NH_3), R 12, R 22, R 500, R 502

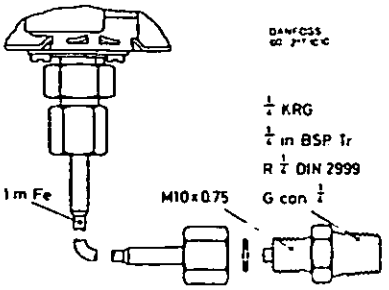

Fig. 2
KP 5A

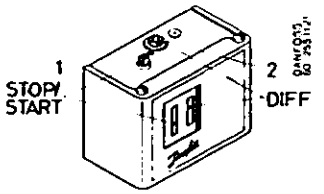

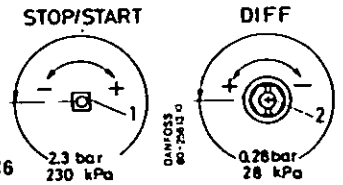

Fig. 16

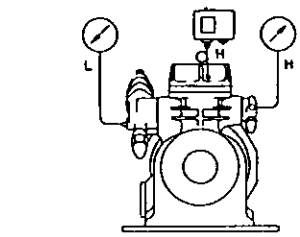

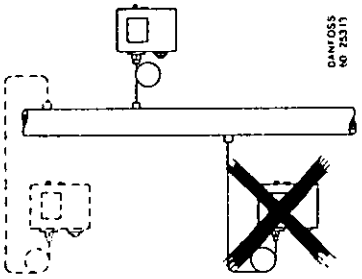

Fig. 4

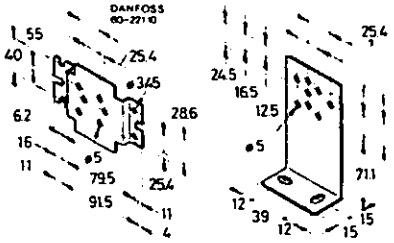

Fig. 5 60-1055 60-1056

Fig. 6 60-1054

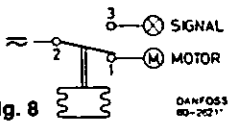

Fig. 8

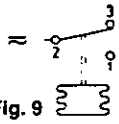

Fig. 9

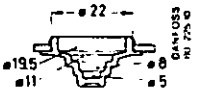

Fig. 10

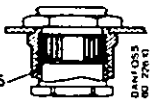

Fig. 11 50 stk./pieces/ Stck./pièces 60-1059

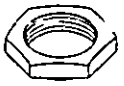

Fig. 12 50 stk./pieces/ Stck./pièces 60-1061

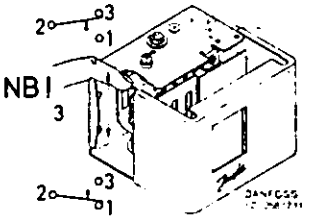

Fig. 13

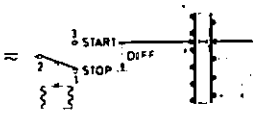

Fig. 14a

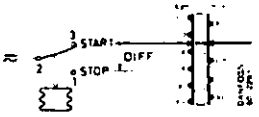

Fig. 14b

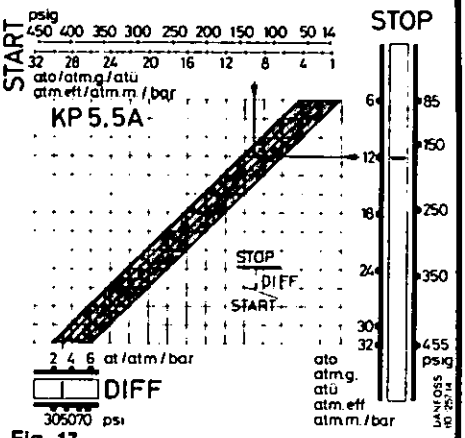

Fig. 17

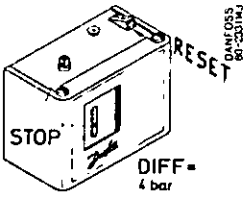

Fig. 18

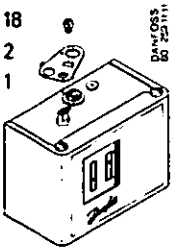

Fig. 19

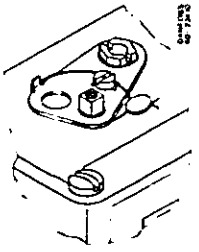

Fig. 20

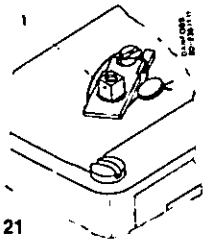

Fig. 21

100 stk./pieces/ Stck./pièces
60-1057

Fig. 22

KP 5: R 12, R 22, R 500, R 502

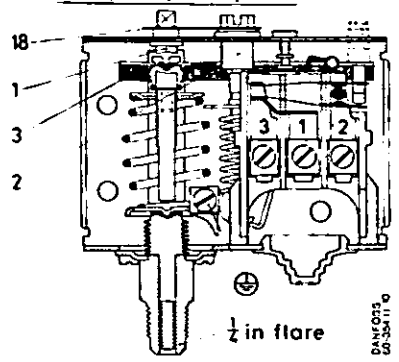

Fig. 1
KP 5

KP 5A: R 717 (NH_3), R 12, R 22, R 500, R 502

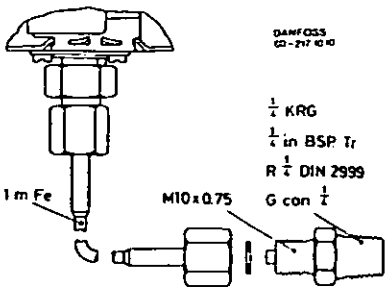

Fig. 2
KP 5A

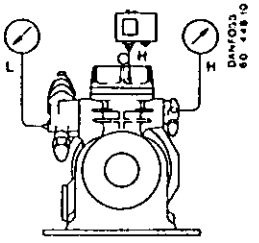

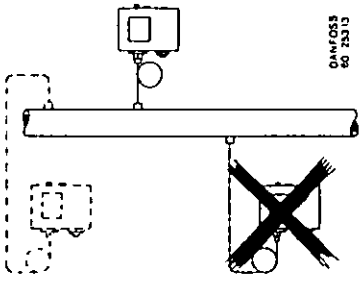

Fig. 4

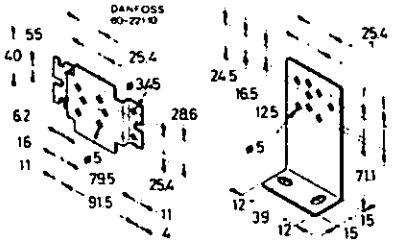

Fig. 5 60-1055 60-1056

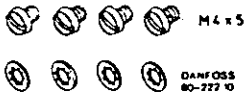

Fig. 6 60-1054

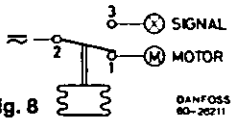

Fig. 8

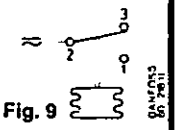

Fig. 9

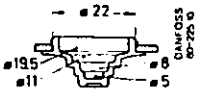

Fig. 10

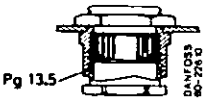

Fig. 11 50 stk./pieces/ Stck./pièces 60-1059

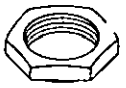

Fig. 12 50 stk./pieces/ Stck./pièces 60-1061

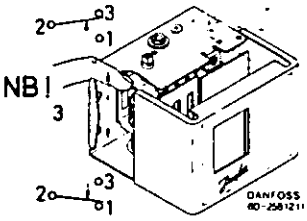

Fig. 13

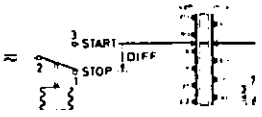

Fig. 14a

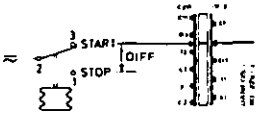

Fig. 14b

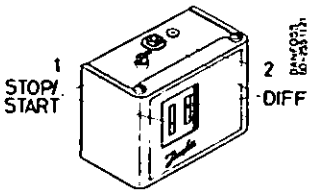

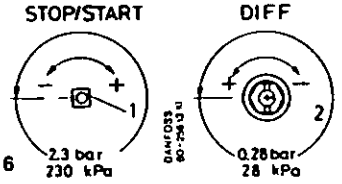

Fig. 16

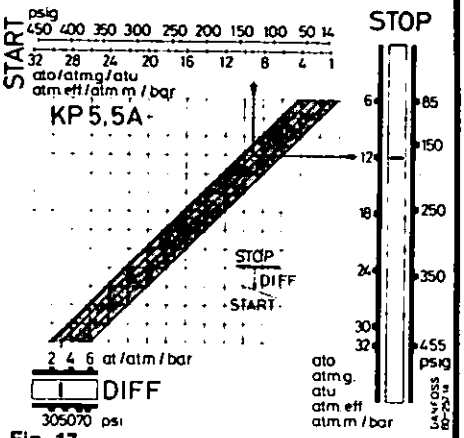

Fig. 17

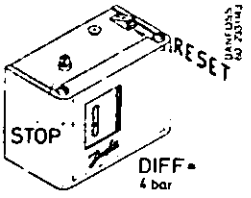

Fig. 18

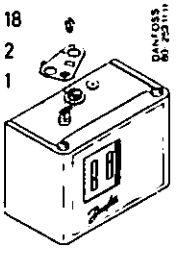

Fig. 19

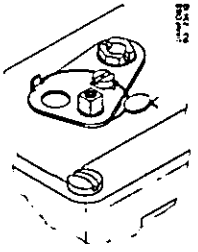

Fig. 20

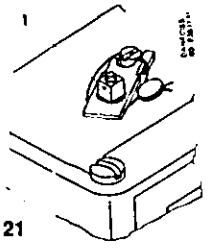

Fig. 21

100 stk./pieces/ Stck./pièces
60-1057

Fig. 22

DANSK

Højtrykspressostater

Fig. 1. KP 5 med flare-tilslutning
1. Områdespindel
2. Differensspindel
3. Hovedarm
18. Låseplade

Fig. 2. KP 5A tilslutning

Funktion
Kontakterne 2–1 bryder, og 2–3 slutter ved stigende tryk. Se fig. 8 og 9.

Tekniske data
Tilladelig omgivelsestemp.
−40 til +65°C (+80°C i max. 2 timer)
Max. till. prøvningstryk
p_e = 33 bar
Kapsling og tæthed
I henhold til IEC 144 og DIN 40050:
IP 44 (SEV)
Det er en forudsætning, at apparatet er monteret på en plan tavle eller på en konsol. Apparatet skal placeres således på konsollen, at alle frihuller er dækket.
Kontaktbelastning
Se apparatets skala.
Max. startstrøm = 112A 380 V.

Montering
Fig 3 og 4. Korrekt montering.
NB! Hold kontra på tilslutningsstudsen, når flare-omløberen spændes eller løsnes!

Fig. 5. 2 typer monteringskonsoller med skruer og skiver. Bestilles separat.

Fig. 6. 4 stk. ekstra skruer og skiver. Anvendes ved montering på eksisterende konsol. Bestilles separat.
NB! Anvendes der eventuelt andre skruer, sørg da for, at de ikke stikker mere end 1,5 mm ind i apparatet.

El-tilslutning
Fig. 8 og 9. Alt efter den valgte funktion foretages tilslutning til klemmerne 2–1 eller 2–3.

Fig. 10. Kabelgennemføring af plast. Kan anvendes ved 6–14 mm kabel.

Fig. 11. Pg 13,5 kabelforskruning med spec. møtrik. Bestilles separat. Kan anvendes ved 6–14 mm kabel.
Ved 8–16 mm kabel kan anvendes en standard kabelforskruning.

Fig. 12. Ekstra møtrik til Pg 13,5 kabelforskruning. Bestilles separat.

Afprøvning
Fig. 13. Hovedarmen (3) vippes.
Ved afprøvning af reset-apparater skal »RESET«-knappen påvirkes, samtidig med at hovedarmen (3) vippes.
NB! Benyt kun den viste metode ved afprøvning!

Indstilling
Fig. 14.
»START« = starttryk
»STOP« = stoptryk
»DIFF« = differens
Alt efter den valgte funktion og klemmetilslutning indstilles stop- eller starttrykket på områdeskalaen.

Apparater uden reset
Fig. 15 og 16. Eksempel: Kompressormotoren ønskes stoppet ved stigende tryk (højtrykssikring). Indstil stoptrykket på »STOP«-skalaen. Én omdrejning af områdespindelen (1) ~ 2,3 bar.
Differensen = stoptrykket minus starttrykket.
Indstil differensen på »DIFF«-skalaen.
Én omdrejning af differensspindelen (2) ~ 0,28 bar.
Kontroller start- og stoptrykket med manometer!

Fig. 17. Eksempel på indstilling af KP 5 uden reset.
Ønsket stoptryk = 12 bar
Ønsket starttryk = 9 bar
Differensen bliver 12 − 9 = 3 bar
Stoptrykket = 12 bar indstilles på »STOP«-skalaen.
Differensen = 3 bar indstilles på »DIFF«-skalaen.
Kompressormotoren/styrestrømmen tilsluttes klemme 1. Fasen tilsluttes klemme 2. Se fig. 9 og 14.

Apparater med max. reset
Fig. 18. Indstil stoptrykket på »STOP«-skalaen. Differensen er fast indstillet til 3 bar. Kompressormotoren genstartes efter stop ved at trykke på »RESET«-knappen. Genstart kan først ske, når trykket er faldet ca. 3 bar under det indstillede stoptryk.

Låsning af indstillingen
Apparater uden reset
Fig. 19. Områdespindelen (1) og differensspindelen (2) kan låses med låsepladen (18).

Fig. 20. Ønskes plombering, anvendes plombeskrue. Se fig. 22.

Apparater med max. reset
Fig. 21. Områdespindelen (1) kan låses med den medleverede låseplade.

Fig. 22. Plombeskrue. Bestilles separat.

ENGLISH

High-pressure controls

KP 1. KP 5 with flare connection
1. Range setting spindle
2. Differential setting spindle
3. Main arm
18. Locking plate

Fig. 2. KP 5A connection

Function
Contacts 2–1 break and contacts 2–3 make at a rise in pressure. See fig. 8 and 9.

Technical data
Permissible ambient temperature
−40 to +65°C (−40 to +150°F); +80°C (+176°F) for maximum 2 hours
Maximum permissible test pressure
p_e = 33 bar (470 psig)
Enclosure and tightness
In accordance with IEC 144 and DIN 40050: IP 44 (SEV).
It is a condition that the unit is mounted on a plain board or on a bracket. The unit shall be placed on the bracket in such a way that all open holes are covered.
Rating
See dial on unit.
Max. starting current = 112A 380 V.

Fitting
Fig. 3 and 4. Correct fitting.
NOTE: Keep a countergrip with a spanner on the connector during tightening or slackening of the flared coupling nut!

Fig. 5. Two types of mounting bracket with screws and washers. To be ordered separately.

Fig. 6. Four extra screws and washers. To be used for mounting on the existing bracket. To be ordered separately.
NOTE! If other screws are used, take care that these do not project more than 1.5 mm into the control.

Mains connection
Fig. 8 and 9. Depending on the function chosen connection is made to terminals 2–1 or 2–3.

Fig. 10. Plastic cable entry. Can be used for 6–14 mm cable.

Fig. 11. Pg 13.5 screwed cable connection with special nut. To be ordered separately. Can be used for 6–14 mm cable.
A standard screwed cable connection can be used for 8–16 mm cable.

Fig. 12. Extra nut for 13.5 screwed cable entry. To be ordered separately.

Testing
Fig. 13. Tilt the main arm (3).
To test controls with reset, the "RESET" button should be actuated, the main arm (3) being tilted at the same time.
NOTE: Only the method shown should be used for testing!

Setting
Fig. 14.
"START" = start pressure
"STOP" = stop pressure
"DIFF" = differential
Depending on the function chosen and the terminal connections, the stop or start pressure is set on the range scale.

Unit without reset
Fig. 15 and 16. Example: It is desired to stop the compressor motor at a rise in pressure. (High pressure safeguard). Set the stop pressure on the "STOP" scale. One turn of the range spindle (1) ~ 2.3 bar.
The differential = the stop pressure minus the start pressure.
Set the differential on the "DIFF" scale. One turn of the differential spindle (2) ~ 0.28 bar.
Check the start and stop pressure with a gauge.

Fig. 17. Example of setting KP 5 without reset
Stopping pressure required = 12 bar (171 psig)
Starting pressure required = 9 bar (128 psig)
The differential will be 12 − 9 = 3 bar (171 − 128 = 43 psi).
The stopping pressure = 12 bar (171 psig) is set on the "STOP" scale.
The differential = 3 bar (43 psi) is set on the "DIFF" scale.
The compressor motor/pilot current is connected to terminal 1.
Phase is connected to terminal 2. See Figs. 9 and 14.

Controls with maximum reset
Fig. 18. Set the stopping pressure on the «STOP» scale. The differential is fixed at 3 bar (43 psi). The compressor motor is restarted after stopping by depressing the "RESET" button. Restarting cannot be done until the pressure has decreased to approx. 3 bar (43 psi) below the set stopping pressure.

Locking the setting
Units without reset
Fig. 19. The range setting spindle (1) and differential setting spindle (2) can be locked by means of the locking plate (18).

Fig. 20. If sealing with wire and lead is required, use the sealing screw. See fig. 22.

Units with max. reset
Fig. 21. The range setting spindle (1) can be locked with the aid of the locking plates supplied.

Fig. 22. Sealing screw. Order separately.

INSTRUCTIONS

BM

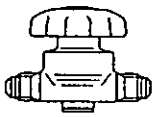

009R9663

R 12, R 22, R 500, R 502

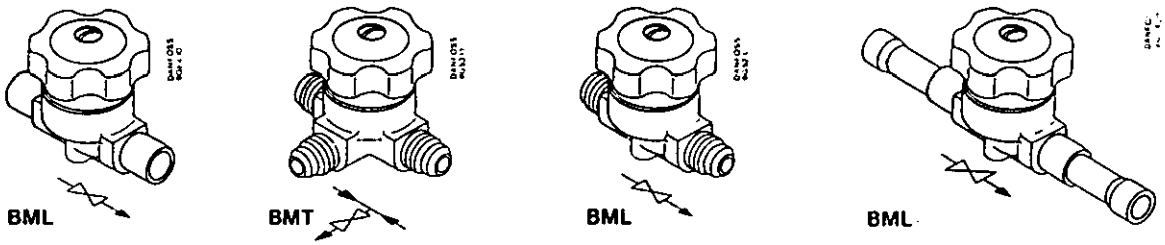

Fig. 1 BML BMT BML BML

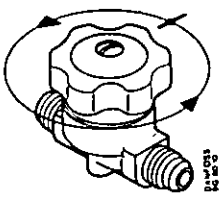

Min. medium temperature: -55°C (-70°F)
Max. medium temperature: 100°C (210°F)
Min. working pressure: -1 bar/30 in Hg
PB = 21.5 bar / MWP = 310 psig

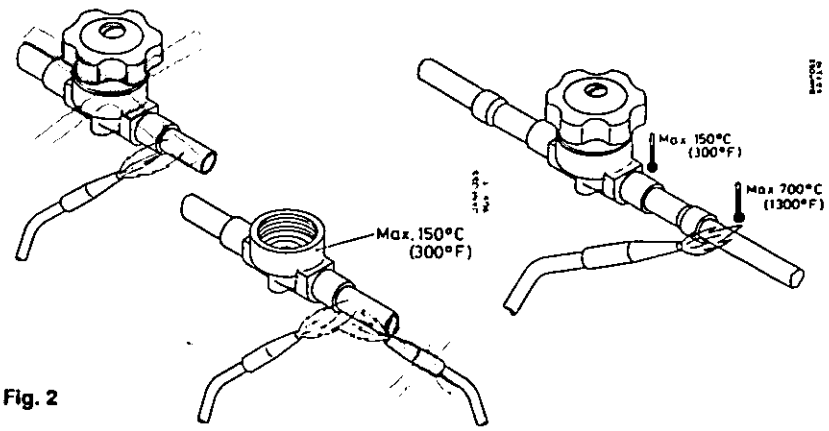

Fig. 2

009R9663

RI.10.B3.00 1-1988

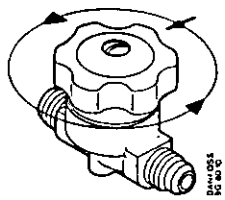

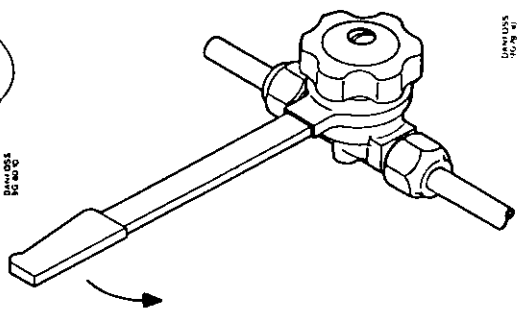

BM 6	9G0025
BM 10	9G0026
BM 12	9G0027
BM 15	9G0028
BM 18-22	9G0029

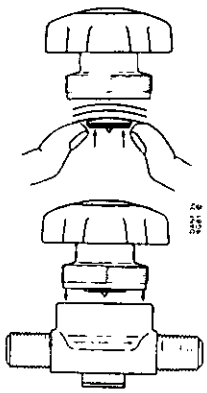

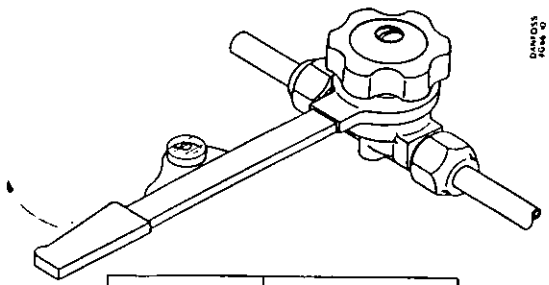

BM 6-10	50 Nm (5 kpm)
BM 12	60 Nm (6 kpm)
BM 15-22	80 Nm (8 kpm)

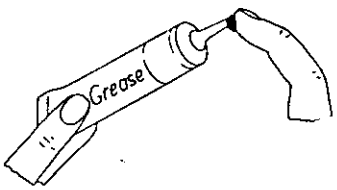

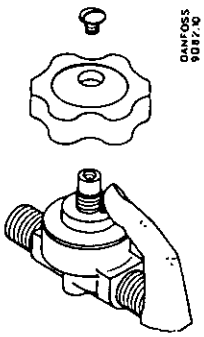

Printed in Denmark by Danfoss Litho 5.89

INSTRUCTIONS

EVR, Normally Closed (NC)
EVR, Normally Open (NO)

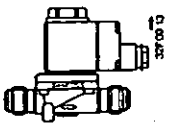

032R9500

R 12, R 22, R 502

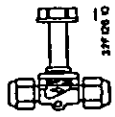

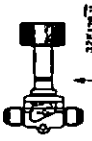

NB

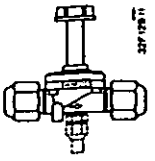

EVR 15 (NC)

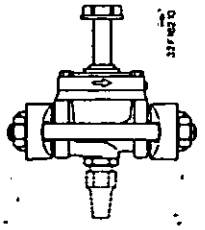

EVR 15, 20 (NC)

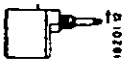

a.c.~

a.c.~

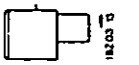

a.c.~

12 W a.c.~
20 W d.c. ⎓

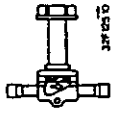

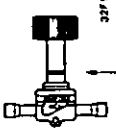

EVR 2, 3, 6 (NC)

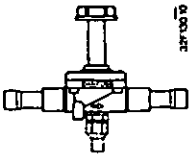

EVR 6, 10, 15 (NO)

EVR 15, 20 (NC)

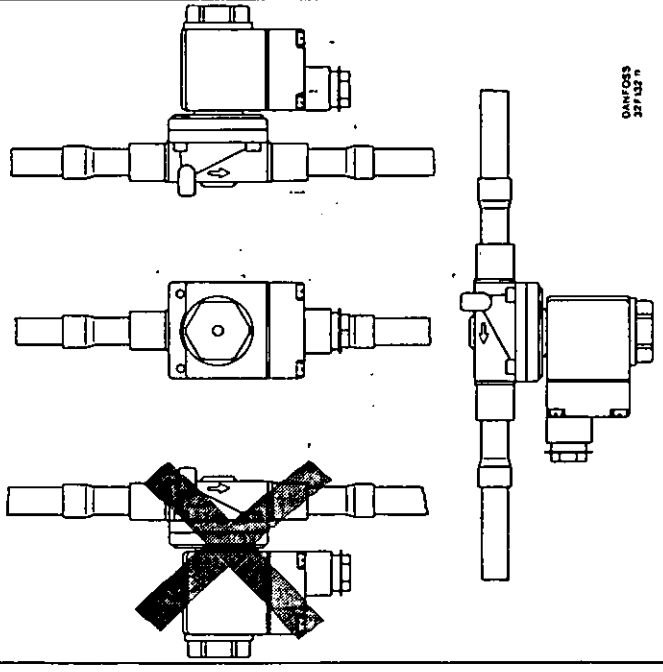

9 W a.c. EVR 2	42N	$t_{max.}$ 40°C (105°F)
10/12W a.c.	18Z	t_{max} 80°C (175°F)
20W d.c.	18Z	t_{max} 50°C (120°F)
10W a.c.	18Z EVR(NO)	$t_{max.}$ 55°C (130°F)

$t_{min.}$ -40°C(-40°F)

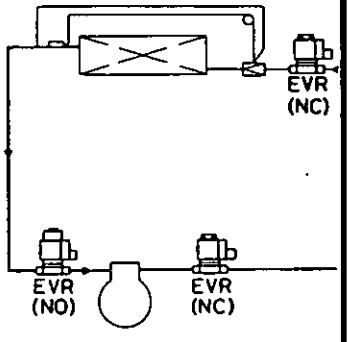

Min. medium temperature:	-40°C(-40°F)
Max.medium temperature:	120°C(250°F)
Max. working pressure	PB 35 bar/MWP 500 psig
Max. opening diff. pressure(MOPD):	○
p_{test} max.:	46 bar eff.(650 psig)

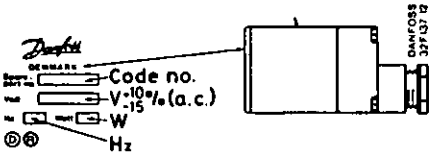

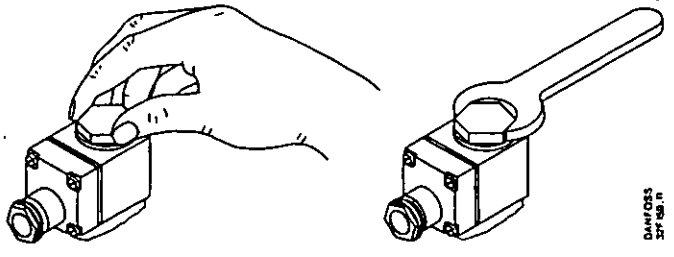

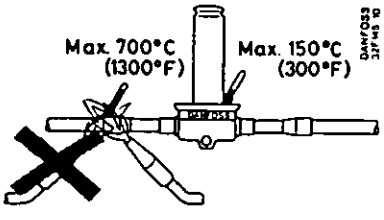

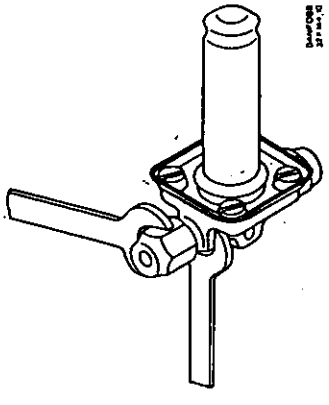

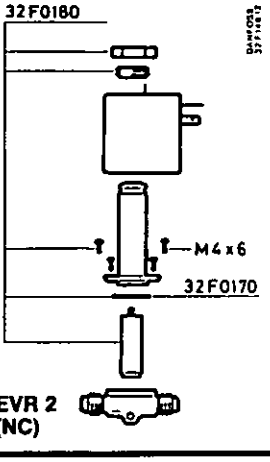

EVR 2
(NC)

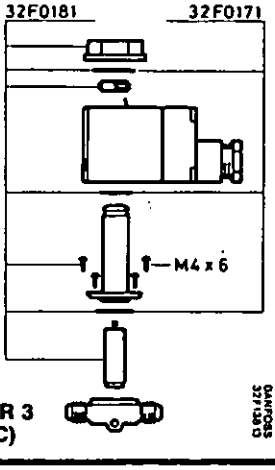

EVR 3
(NC)

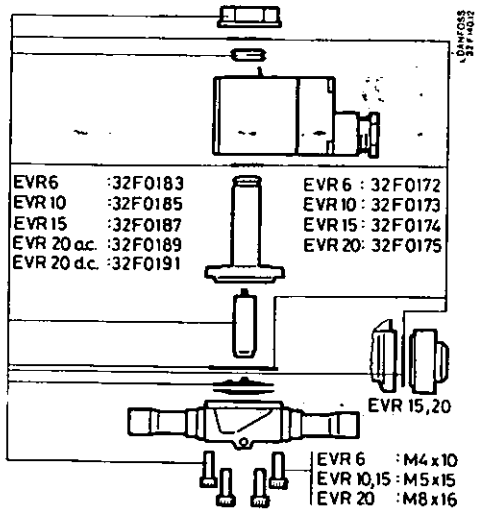

EVR 6, 10, 15, 20 (NC)

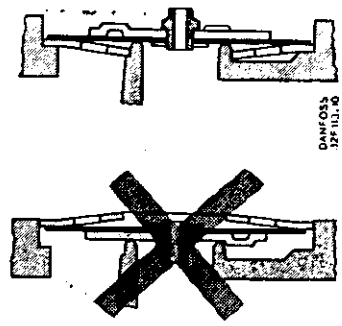

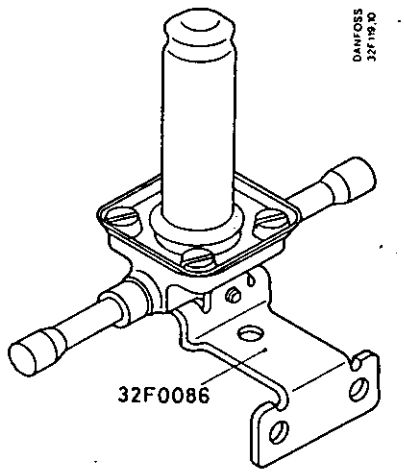

EVR 2, 3, 6, 10

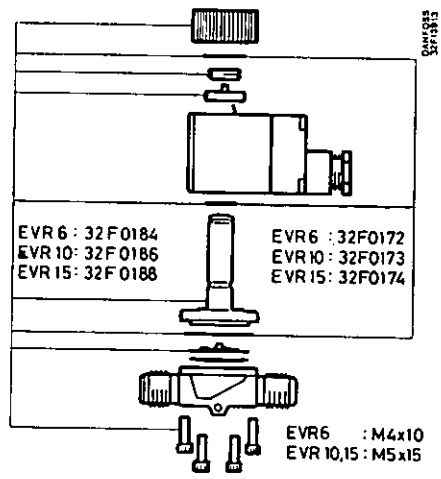

EVR 6, 10, 15 (NO)

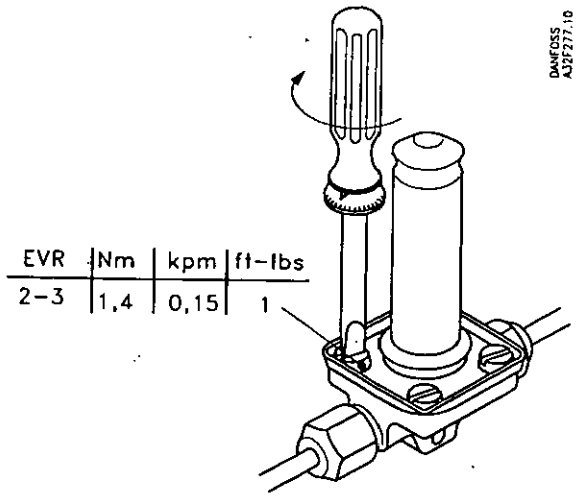

EVR	Nm	kpm	ft-lbs
2-3	1,4	0,15	1

© Danfoss ¼ (RK) DTP.CCB.

23A0450

DX – solid core:
R 12, R 22, R 500, R 502

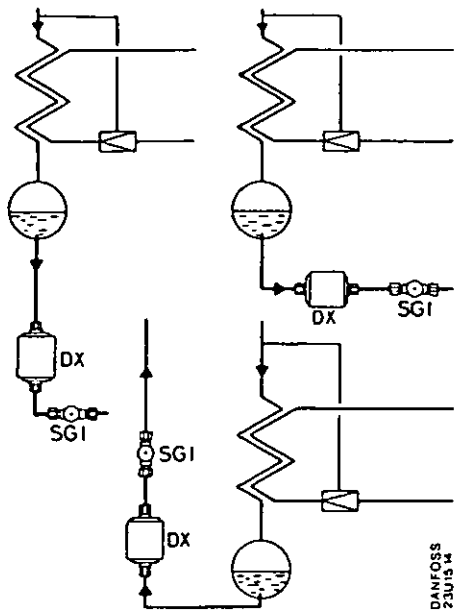

23A0450

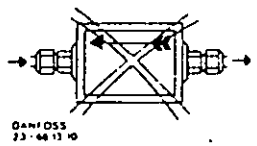

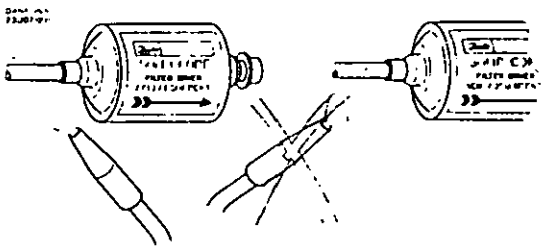

Printed in Denmark by Danfoss Litho 4 83 C C 8

INSTRUCTIONS

WVFX 10-25

003R9743

R 12, R 22, R 502

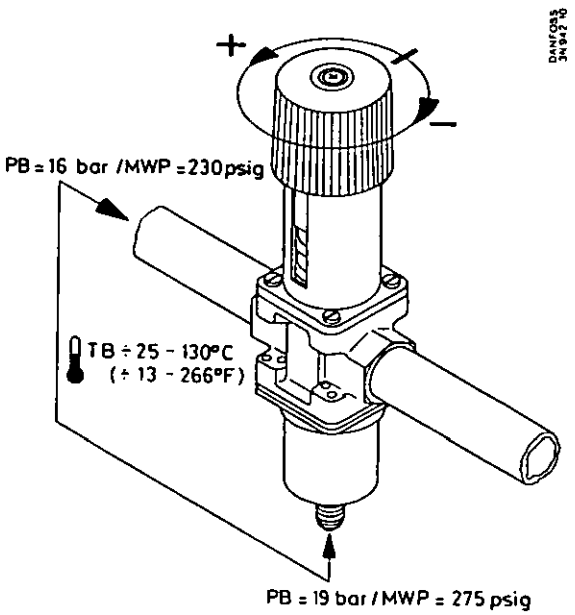

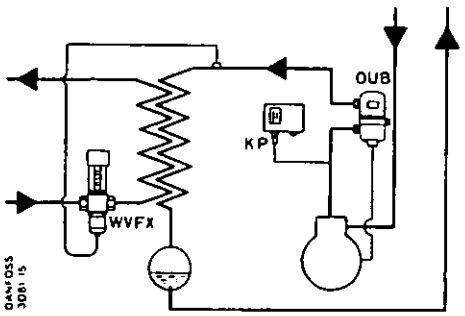

003R9743

© Danfoss ¾ (RK) 2 91 CCB

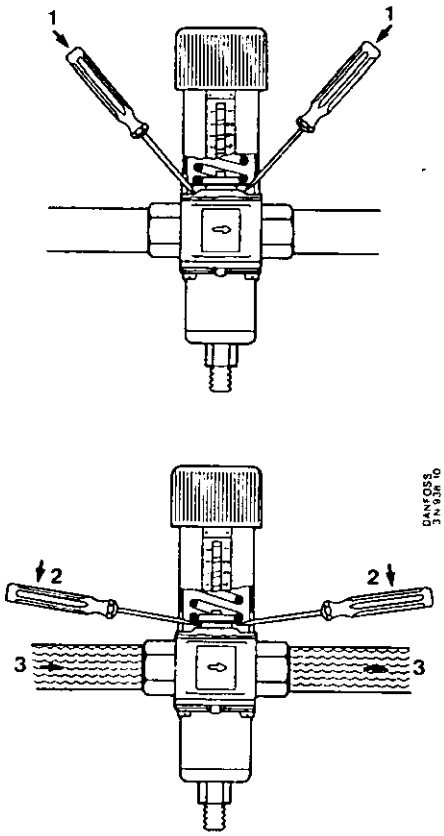

Repair kit
WVFX 10-15: 003N4006
WVFX 20 :003N4007
WVFX 25 :003N4008

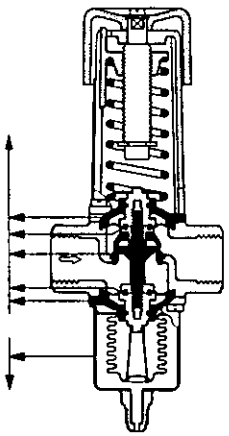

INSTRUCTIONS

SGI, SGR

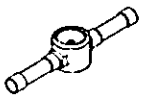

014R9572

Mounting options

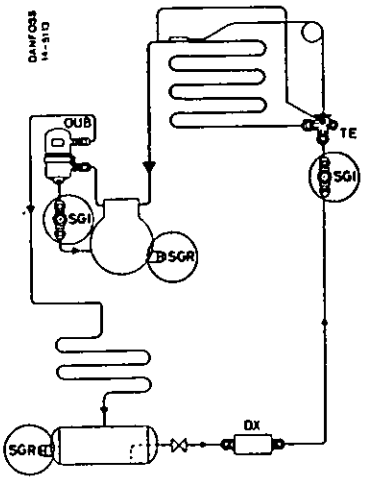

014R9572

Moisture indication

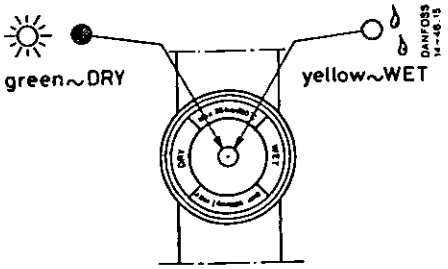

for R 12, R 22, R 500, R 502 refrigerant

Operating pressure: SGR, SGI 6, 10, 12, 15
max. 500 psig (35 bar p_e)
SGI 18, 22
max. 400 psig (28 bar p_e)

Mounting

tubes O.D. larger than 7/8 in.

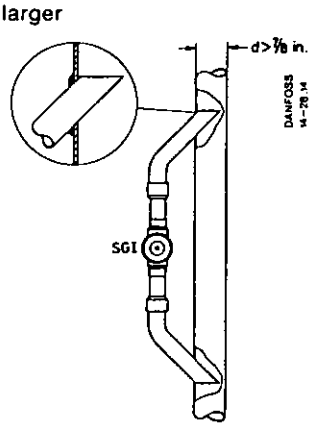

Soldering

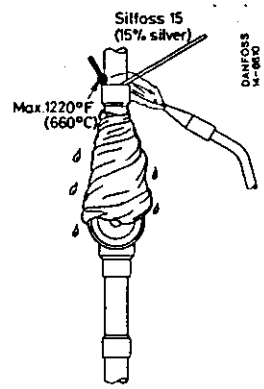

Width across flats (W)

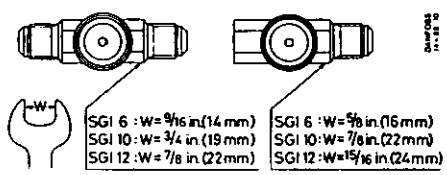

Connection

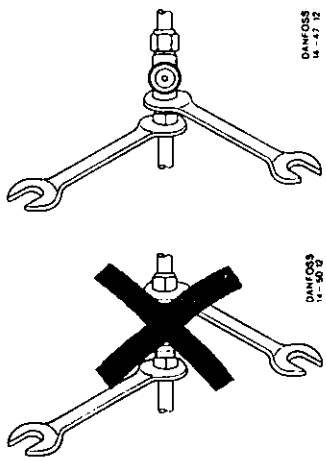

SGI

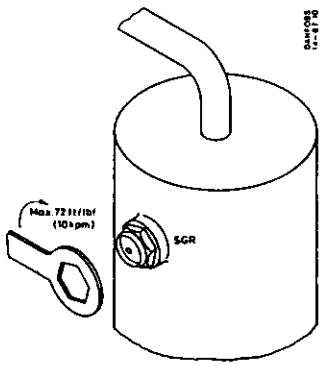

SGR

© Danfoss 1/1 (RK) 2.90 CCB.

INSTRUCTIONS

OUB

40R9573

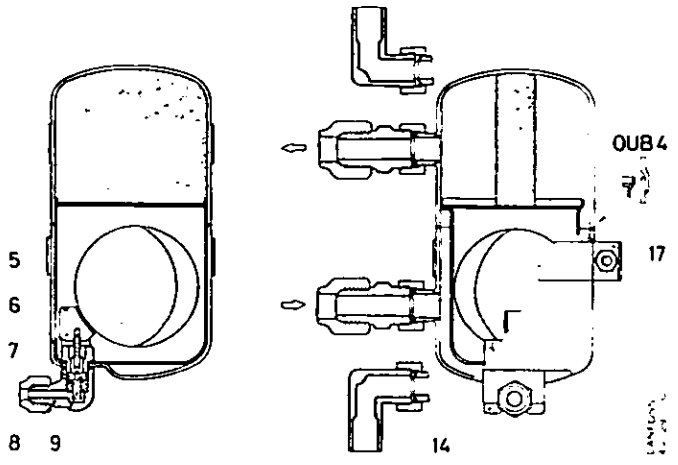

Pos. og reservedele/Position Nos. and Spare Parts/Pos. und Ersatzteile/Pos et pièces de rechange

Pos.		Antal/ No. req./ Anzahl/ Nombre	Best.nr./Code Nos./ Artikel-Nr./N° de code	
			OUB 1	OUB 4
5.	Pakning for 8/Gasket for 8/Dichtung für 8/Joint pour 8	1	040B1117	040B1117
6.	O-ring/O-ring/O-Ring/Joint torique	1	633B1326	633B1326
7.	Dyse/Nozzle/Düse/Orifice	1	040B2320	040B2320
8.	Returolietilslutning/Return oil connection/Anschluss für Ölrücklauf/Raccord de retour d'huile	1	040B1120	040B1120
9.	Dyseholder/Nozzle holder/Dusenhalter/Porte-orifice	1	040B0060	040B0060
14.	Fastgorelsesskrue for 8/Fixing screw for 8/Befestigungsschraube für 8/ Vis de fixation pour 8	2	681X1097	681X1097
17.	Fastgorelsesbøjle/Fastening strap/Befestigungsbügel/Collier de fixation	1	040B0050	040B0055

DANSK

Olieudskiller

TEKNISKE DATA

Max. arbejdstryk: 22 ato
Max. provningstryk: 33 ato
Kølemidler: R 12, R 22, R 502

MONTERING

Olieudskilleren monteres i køleanlæggets trykledning mellem kompressor og kondensator.
Alle typer skal anbringes lodret med returolietilslutningen (8) nedad.
Udskilleren tilsluttes trykledningen med gennemstrømning som vist med pilene.
OUB fastgøres v. hj. a. bøjlen (17).
Returolieledningen fra tilslutningen (8) forbindes med kompressorens krumtaphus.
Har anlægget tidligere arbejdet uden olieudskiller, tilrådes det i den første tid at holde krumtaphusets oliestand under observation og regelmæssigt aftappe overskydende olie, idet udskilleren vil trække den olie tilbage, som før var fordelt over hele anlægget. Kontrol af olieudskillerens funktion kan foretages v. hj. a. et skueglas type SGI i returolieledningen. Ved korrekt funktion vil en konstant oliestrøm herved kunne iagttages.
Monteres OUB på nye anlæg, vil det normalt ikke være nødvendigt at påfylde ekstra olie, da oliebeholderen kun kan rumme små mængder.

SERVICE

Fjernes tilslutningen (8) for returolie, bliver ventilens dyse (7) tilgængelig for rensning.

ENGLISH

Oil separator

TECHNICAL DATA

Maximum operating pressure: 22 atm.g. (315 psig)
Maximum test pressure: 33 atm.g. (470 psig)
Refrigerants: R 12, R 22, R 502.

FITTING

The oil separator is inserted in the delivery line of the refrigerating plant between the compressor and the condenser.
All types should be mounted vertically with the return oil connection (8) facing downwards.
The separator should be connected to the delivery line with the flow in the direction indicated by the arrows.
OUB is fixed by the fastening strap (17).
The return oil line from the connection (8) is connected to the compressor crankcase.
If the plant concerned has previously been operating without an oil separator, it is recommended that the oil level in the crankcase should be observed at the start and excess oil drained at regular intervals, since the separator will collect the oil which was previously distributed all over the plant.
A watch can be kept on the functioning of the oil separator by a sight glass Type SGI in the return oil line. During correct operation the sight glass will show a steady oil flow.
If OUB is installed in a new plant, it will normally not be necessary to top up with additional oil, since the oil container can hold only a very small volume.

SERVICING

When the return oil connection (8) is removed, access is given to the valve nozzle (7) for cleaning.

DEUTSCH

Ölabscheider

TECHNISCHE DATEN

Max. Betriebsdruck: 22 atü
Max. Prüfdruck: 33 atü
Kältemittel: R 12, R 22, R 502

MONTAGE

Der Ölabscheider wird in die Druckleitung der Kälteanlage zwischen Kompressor und Verflüssiger montiert.
Alle Typen sind senkrecht und mit dem Rückolanschluss (8) nach unten anzubringen.
Der Ölabscheider ist mit Durchfluss in der Pfeilrichtung an die Druckleitung anzuschliessen.
OUB ist mit Hilfe des Bügels (17) zu befestigen.
Die Rückölleitung vom Anschluss (8) ist mit dem Kurbelgehäuse des Kompressors zu verbinden.
Hat die betreffende Anlage früher ohne Ölabscheider gearbeitet, wird empfohlen, die erste Zeit den Ölstand im Kurbelgehäuse laufend zu beobachten und überschüssiges Öl regelmässig abzulassen, da der Ölabscheider das Öl zurückziehen wird, das früher über die ganze Anlage verteilt war.
Eine Überwachung der Funktion des Ölabscheiders ist mit einem Schauglas Typ SGI in der Ölrücklaufleitung möglich. Bei korrekter Funktion kann dadurch ein konstanter Ölstrom beobachtet werden.
Bei der Montage des OUB an neuen Anlagen ist es normalerweise nicht erforderlich, zusätzliches Öl nachzufüllen, da der Ölbehälter nur kleine Mengen fassen kann.

WARTUNG

Nach Abbau des Ölrücklaufanschlusses (8) wird die Düse (7) des Ventils für Reinigung zugänglich.

INSTRUCTIONS

PM 1

PMV (= PM 1 + EVM)

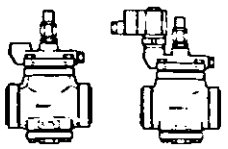

27R9585

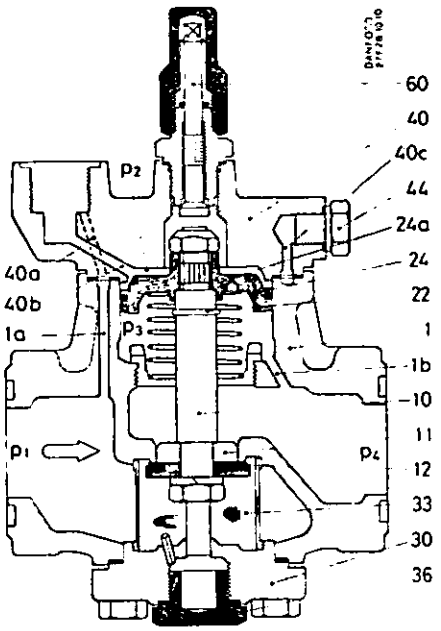

Fig. 1. PM 1

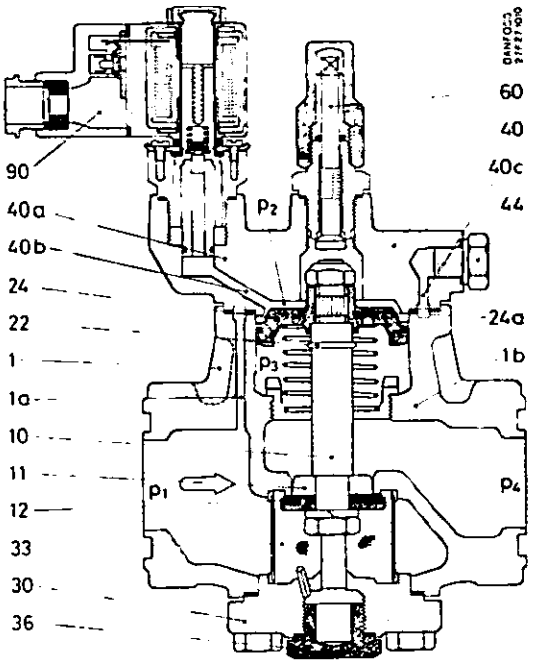

Fig. 2. PMV (= PM 1 + EVM)

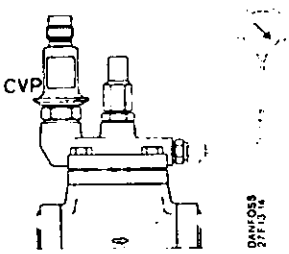

Fig. 3. PM 1 + CVP

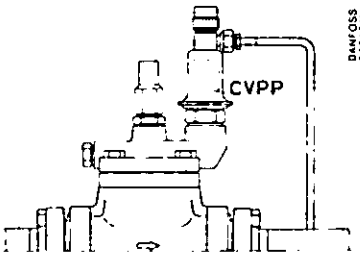

Fig. 5. PM 1 + CVPP

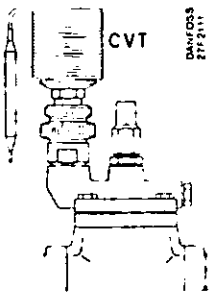

Fig. 7. PM 1 + CVT

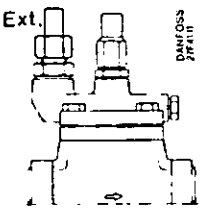

Fig. 9. PM 1 + Ext.

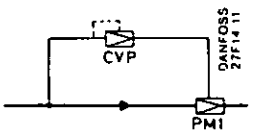

Fig. 4. PM 1 + CVP

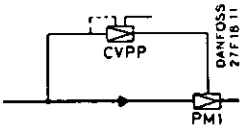

Fig. 6. PM 1 + CVPP

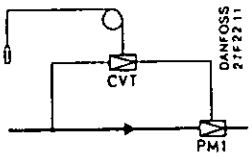

Fig. 8. PM 1 + CVT

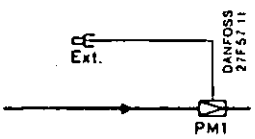

Fig. 10. PM 1 + Ext.

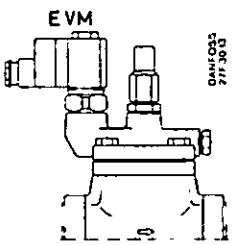

Fig. 11. PMV (= PM 1 + EVM)

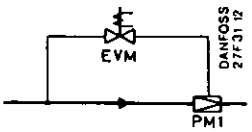

Fig. 12. PMV (= PM 1 + EVM)

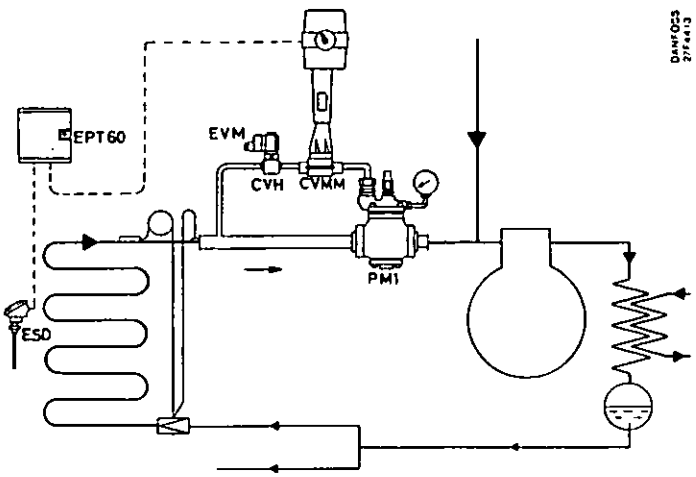

Fig. 13

KI. 30. K1. 52 4-1979
KI. 41.
Replaces KI 30 C2 and KI 41 G1

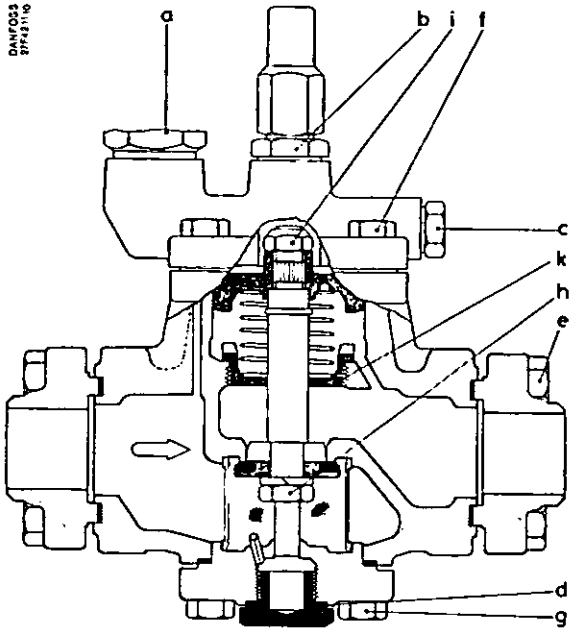

Fig. 14

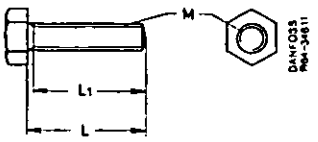

Fig. 15

I

Pos. Item. Pos. Pos.	Gevind Thread Gewinde Filetage						Tilspændingsmoment i Nm (10 Nm = 1 kpm) Tightening torque in Nm (10 Nm = 1 kpm) Anzugsmoment in Nm (10 Nm = 1 kpm) Couple de serrage en Nm (10 Nm = 1 kgf.m)					
	PM-storrelse PM size PM-Grösse PM-dimension											
	20	25	32	40	50	65	20	25	32	40	50	65
a	M24 × 1.5						50					
b	M20 × 1.5						50					
c	¼ RG ¼ BSP R ¼ ¼ G				L = 12		25					
d	M24 × 1.5						50					
e	M12 × 1.75			L = 45	M14 × 2 L = 65	M14 × 2 L = 70	60				80	
f	M10 × 1.5		L = 30	M12 × 1.75	L = 35	M14 × 2 L = 40	35			60		80
g	M10 × 1.5		L = 30	M12 × 1.75	L = 35	M14 × 2 L = 40	35			60		80
h	M10 × 1.5		M12 × 1.75		M16 × 2		30		40		50	60
i	M10 × 1.5						25					
k	M39 × 1.5		M48 × 1.5	M52 × 2	M64 × 2	M80 × 2	80			100		120

II

Flangesæt Flange sets Flanschsätze Jeux de brides							
Type Type Typ Type	Flangeart Flange type Flanschart Nature de bride	Svejse Weld Schweissfl. A souder		Lodde Solder Löttfl. A braser			
		in	Best. nr. Code No. Artikel-Nr. Nº de code *)	in	Best. nr. Code No. Artikel-Nr. Nº de code *)	mm	Best. nr. Code No. Artikel-Nr. Nº de code *)
PM 1 20–25	12	¾ 1	27N1220 27N1225	⅞ 1⅛	27L1223 27L1229	22 28	27L1222 27L1228
PM 1, PMV 32	23	1¼ 1½	27N2332 27N2340	1⅜	27L2335	35	27L2335
PM 1, PMV 40	24	1½ 2	27N2440 27N2450	1⅝	27L2441	42	27L2442
PM 1, PMV 50	25	2 2½	27N2550 27N2565	2⅛	27L2554	54	27L2554
PM 1, PMV 65	26	2½ 3	27N2665 27N2680	2⅝	27L2665	76	27L2676

*) Best.nr. omfatter et sæt med 2 stk. flanger (tilgang og afgang).
*) The code No. covers one set with two flanges (inlet and outlet).
*) Die Artikel-Nr. umfasst einen Satz mit 2 Stck. Flanschen (Eintritt und Austritt).
*) Le nº de code comprend un jeu de 2 brides (entrée et sortie).

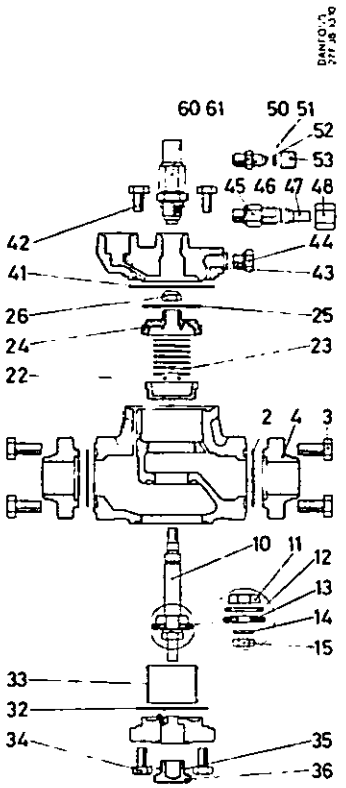

Fig. 16. PM 1

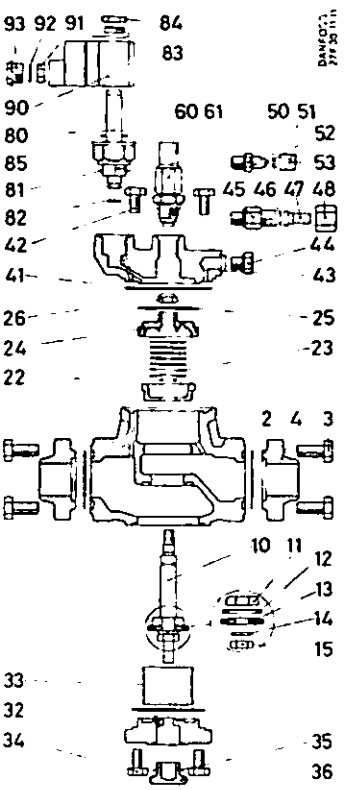

Fig. 17. PMV

IIIa. PM 1/PMV

Pos. Item Pos. Pos.	PM 1 PMV	Best.nr. Code No. Artikel-Nr. Nº de code
2	20–25 32 40 50 65	633L9130 633L9152 633L9241 633L9153 633L9242
3	20–65	Se »e« tabel I See "e" table I Siehe »e« Tafel I Voir »e« tableau I
4	20–65	Se tabel II See table II Siehe Tafel II Voir tableau II

10 + 11 + 12 + 13 + 14 + 15	20 25 32 40 50 65	27F0260 27F0261 27F0262 27F0263 27F0264 27F0265

22	20–40 50–65	682L6024 682L6025
23	20–25 32 40 50 65	663X1850 663X1852 663X1854 663X1856 663X1858
24	20–25 32 40 50 65	27F0380 27F0381 27F0382 27F0383 27F0384
25	20–25 32 40 50 65	27F0415 27F0416 27F0417 27F0418 27F0419
26	20–65	681X9126

IIIb. PM 1/PMV

Pos. Item Pos. Pos.	PM 1 PMV	Best.nr. Code No. Artikel-Nr. Nº de code
32	20–25 32 40 50 65	633L9232 633L9233 633L9234 633L9235 633L9236
33	20–25 32 40 50 65	27F0405 27F0406 27F0407 27F0408 27F0409
34	20–65	Se »g« tabel I See "g" table I Siehe »g« Tafel I Voir »g« tableau I
35	20–65	26E0425
36	20–65	27F0457

41	20–25 32 40 50 65	27F0420 27F0421 27F0422 27F0423 27F0424
42	20–65	Se »f« tabel I See "f" table I Siehe »f« Tafel I Voir »f« tableau I
43	20–65	633L3058
44	20–65	26H0478
45 + 46 + 47 + 48	20–65	27B2035

50 + 51 + 52 + 53	20–65	27B2041

60 + 61	20–65	27F0281
61	20–65	633L3055

IIIc. PMV

Pos. Item Pos. Pos.	PMV	Best.nr. Code No. Artikel-Nr. Nº de code
80 + 83 + 84	32–65	27B0050
81	32–65	26E0425
82	32–65	633B1057
83	32–65	32U7357
84	32–65	32U7356
85	32–65	32U1339

90 + 91 + 92 + 93	32–65	Se tabel IV See table IV Siehe Tafel IV Voir tableau IV

IV. EVM

Effekt Wattage Leistung Puissance	Max. åbnings-differenstryk Max. opening differential pressure Max. Öffnungs-differenzdruck Pression différentielle max. d'ouverture MOPD	Best. nr. Code No. Artikel-Nr. Nº de code
10 W∿ (a.c.)	21 bar (300 psi)	18Z6700
20 W⎓ (d.c.)	14 bar (200 psi)	18Z6850

DANSK

Pilotstyret regulator, PM 1
Hovedventil, PM 1
Magnetventil, PMV

Konstruktion
Se fig. 1.
1. Ventilhus
1a og 1b. Kanaler i ventilhuset (1)
10. Ventilspindel
11. Drøvlekegle
12. Ventilsæde
22. Låsering
24. Servostempel
24a. Udligningshul i servostemplet (24)
30. Bunddæksel
33. Smudsfilter
36. Bundprop
40. Dæksel
40a, b og c. Kanaler i dækslet (40)
44. Manometertilslutning
60. Manuel betjening

Tekniske data
PM 1 regulerer det gennemstrømmende medie modulerende eller on/off i afhængighed af den påskruede eller eksterne pilotventils styreimpuls.
PMV regulerer det gennemstrømmende medie on/off i afhængighed af den påskruede eller eksterne pilotventils styreimpuls.
PM 1/PMV kan anvendes i suge-, væske-, varmgas- og væske/damp-ledninger.

Reguleringsområde
Afhænger af pilotventilen.

Kølemidler
R 12, R 22, R 502 og R 717 (NH_3).

Medietemperatur
−60°C til +120°C.

Omgivelsestemperatur
−40°C til +80°C.

Max. tilladelige spændingsvariationer
PMV, vekselstrøm +10% −15%
PMV, jævnstrøm ±10%

Åbningsdifferenstryk (Δp)
PM hovedventilen kræver et minimum åbningsdifferenstryk på 0.07 bar (7 kPa) for at begynde at åbne, og 0.2 bar (20 kPa) for at være helt åben.
NB! Ventilen åbner, hvis der opstår et differenstryk imod gennemstrømningsretningen.

Max. prøvningstryk (p_e)
33 bar (3300 kPa).

Tæthed
IP 67 i henhold til IEC 144 og DIN 40050.

Tilspændingsmomenter
Se fig. 14 og tabel I.

Montering
Flangesæt til PM 1/PMV leveres separat. Se tabel II.
Ventilen monteres med gennemstrømning i pilens retning og med topdækslet opad.
Topdækslet kan drejes 4 × 90° i forhold til ventilhuset.
Ventilen er forsynet med en spindel til manuel åbning.
Som tilbehør kan leveres en selvlukkende ventil for manometertilslutning med flaretilslutning for fluorerede kølemidler og med svejsenippel for ammoniak (NH_3). Se fig. 16, 17 og tabel III.
Hvis der anvendes ekstern pilotventil, skal pilotledningen tilsluttes oversiden af hovedledningen, så eventuelt snavs og olie fra anlægget ikke føres med op gennem pilotledningen.

El-tilslutning
Før spolen på PMV/PM 1 + EVM tilsluttes, kontrollér da, om dens spænding og frekvens er den samme som nettets.
Klemdåsen har Pg 13,5 kabelforskruning.
Kablets diameter kan være fra 6 mm til 14 mm.
Jordforbindelsen tilsluttes klemdåsens jordskrue, der er mærket ⏚.

Service
Ventilen er let at adskille, og de fleste dele kan udskiftes. Se fig. 16 og 17. Når bunddækslet er fjernet, kan filteret tages ud og renses.

Reservedele
Se fig. 16 og 17 samt tabel III og IV. Ved bestilling af spoler angives best.nr. samt spænding og frekvens.

ENGLISH

Pilot-controlled regulator, PM 1
Main valve, PM 1
Solenoid valve, PMV

Design
See fig. 1.
1. Valve body
1a and 1b. Ducts in valve body (1)
10. Regulating spindle
11. Throttling cone
12. Valve seat
22. Locking ring
24. Servo piston
24a. Equalizing hole in servo piston (24)
30. Bottom cover
33. Strainer
36. Plug
40. Cover
40a, b, and c. Ducts in cover (40)
44. Pressure gauge connection
60. Manual operation

Technical data
PM 1 provides modulating or on/off regulation of the refrigerant flow, depending on the control impulse received from the screwed-on or external pilot valve.
PMV regulates the refrigerant flow on/off, depending on the control impulse received from the screwed-on or external pilot valve.
PM 1/PMV are designed for use in suction, liquid, hot-gas, and liquid/vapour lines.

Range
Depends on the pilot valve.

Refrigerants
R 12, R 22, R 502, and R 717 (NH_3).

Media temperatures
−60°C to +120°C (−76°F to +248°F).

Ambient temperature
−40°C to +80°C (−40°F to +176°F).

Maximum permissible voltage variations
PMV, alternating current +10% −15%
PMV, direct current ±10%

Opening differential pressure (Δp)
The PM main valve requires a minimum opening differential pressure of 0.07 bar (1 psi) to begin opening, and 0.2 bar (2.8 psi) to be completely open.
NOTE: The valve opens if a differential pressure occurs opposite to the direction of flow.

Maximum test pressure (p_e)
33 bar (470 psig).

Enclosure
IP 67 according to IEC 144 and DIN 40050.

Tightening torques
See fig. 14 and table I.

Fitting
A flange set for PM 1/PMV can be obtained separately. See table II.
The valve is fitted with flow in the direction of the arrow and the top cover facing upwards. The top cover can be turned through 4 × 90° relative to the valve body.
The valve has a spindle for manual opening.
A self-closing valve for pressure gauge connection is available as an accessory part provided with a flare connection for fluorinated refrigerants and with a weld nipple for ammonia (NH_3). See figs. 16, 17, and table III.
If an external pilot valve is used, the pilot line must be connected to the upper side of the main line so that any impurities and oil from the system will not pass through the pilot line.

Electrical connection
Before connection of the coil of PMV/PM 1 + EVM, check that its voltage and frequency is the same as that of the mains.
The terminal box has a Pg 13.5 screwed cable entry.
The cable diameter can be from 6 mm to 14 mm.
The earth connection must be connected to the earth screw of the terminal box which is marked ⏚

Service
The valve is easy to take apart, and most parts can be renewed. See figs. 16 and 17. When the bottom cover is removed, the strainer can be taken out for cleaning.

Spare parts
See figs. 16 and 17 as well as tables III and IV.
For ordering of coils, state code No., voltage, and frequency.

INSTRUCTIONS

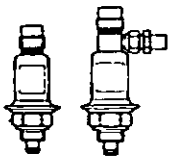

CVP, CVPP

027R9589

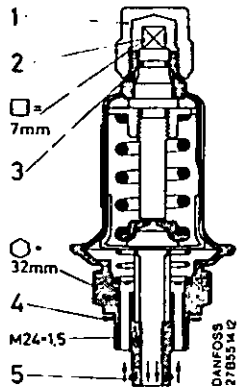

Fig. 1 CVP

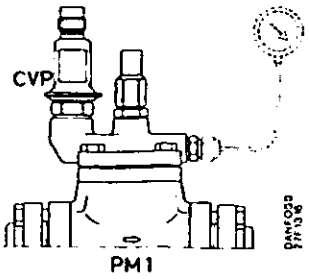

Fig. 2 PM 1 + CVP

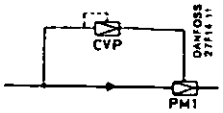

Fig. 3 PM 1 + CVP

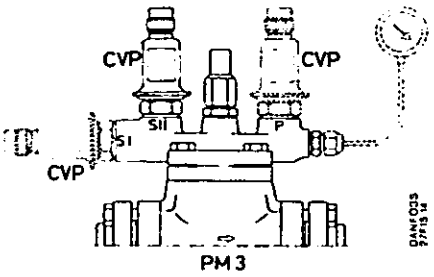

Fig. 4 PM 3 + CVP

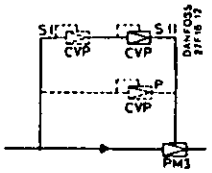

Fig. 5 PM 3 + CVP

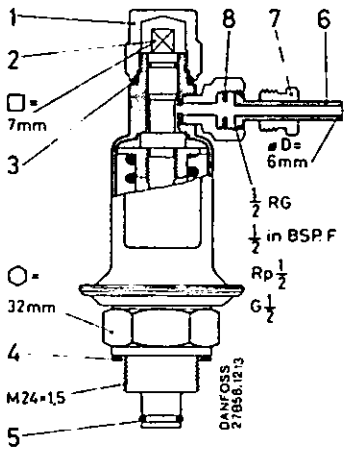

Fig. 6 CVPP

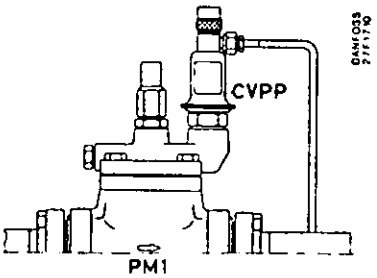

Fig. 7 PM 1 + CVPP

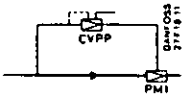

Fig. 8 PM 1 + CVPP

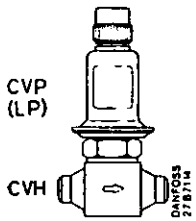

Fig. 9

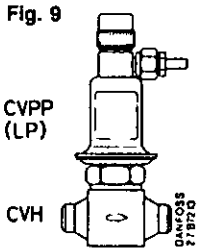

Fig. 10

DANSK

Trykstyrede pilotventiler

Tekniske data

Reguleringsområder	*CVP* p_e = 0 bar → 7 bar eller −0,66 bar → +2 bar *CVPP* Δp = 0 bar → 7 bar Styretrykket må max. være 3 bar højere end medietrykket
Fabriksindstilling	= laveste reguleringsindstilling (slap fjeder)
Kølemidler	R 12, R 22, R 502 og R 717 (NH_3)
Medietemperaturområde	−60°C → +120°C
Max. driftstryk	p_e = 17 bar
Max. prøvningstryk	p_e = 26,5 bar

Montering

CVP eller CVPP monteres i PM-hovedventilens topdæksel. Se fig. 2, 4 og 7.
De medfølgende pakninger til CVP eller CVPP påsættes før montering, og O-ringen smøres med fryseolie.
Pilotventilen har nøglevidden 32 mm og bør tilspændes med et moment på 50 Nm (5 kpm).
CVP eller CVPP kan desuden monteres separat i et ventilhus, bestillingsnr. 27F1047, og anvendes som pilotventil eller selvstændig ventil. Se fig. 9 og 10.
Anvendes CVP/CVPP + ventilhus CVH som pilotventil, monteres enheden i en pilotledning med gennemstrømning imod hovedventilen.
Nippelen (6) på CVPP tilsluttes et eksternt styretryk.

Indstilling

CVP
Drejes indstillingsspindelen (2) højre om (med uret), opnås højere åbningstryk (højere fordampningstryk eller -temperatur) – og omvendt.
Én omdrejning svarer til en ændring på ca. 1 bar for ventiler med området 0 bar til 7 bar og ca. 0,5 bar for ventiler med området −0,66 bar til 2 bar. Grovindstilling: Drej spindelen (2) venstre om (mod uret) indtil stop. Drej derefter højre om (med uret) så mange omdrejninger, som svarer til det ønskede åbningstryk.
Finindstilling: Foretages ved hjælp af manometer efter at køleanlægget har kørt så længe, at der er balance i systemet.

CVPP
Indstillingen foretages på samme måde som beskrevet for CVP.
Åbningstrykket er her lig med trykforskellen mellem tilgangstrykket og styretrykket. En ændring af styretrykket giver en lige så stor ændring af hovedventilens tilgangstryk (= fordampningstrykket).

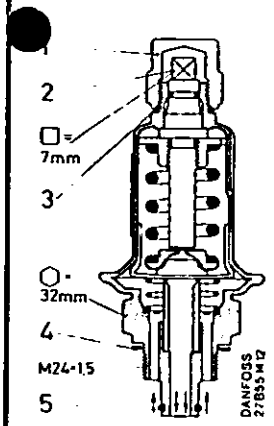

Fig. 1 CVP

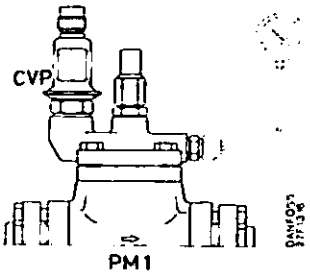

Fig. 2 PM 1 + CVP

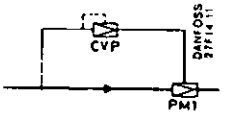

Fig. 3 PM 1 + CVP

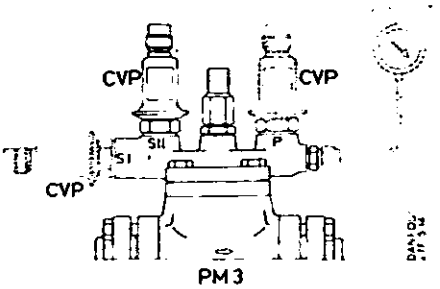

Fig. 4 PM 3 + CVP

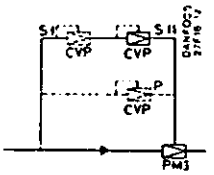

Fig. 5 PM 3 + CVP

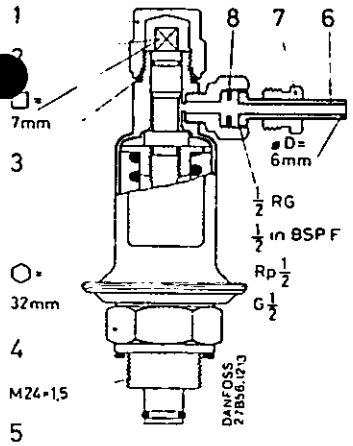

Fig. 6 CVPP

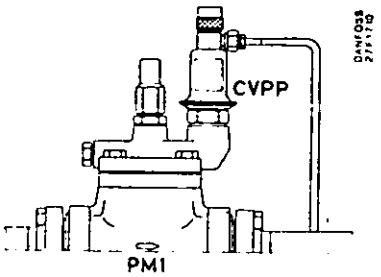

Fig. 7 PM 1 + CVPP

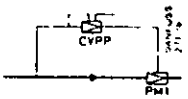

Fig. 8 PM 1 + CVPP

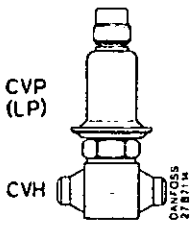

Fig. 9

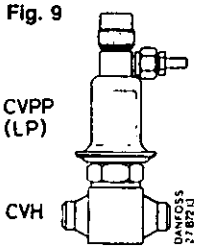

Fig. 10

CVPP anvendes på køleanlæggets lavtrykkside. På højtrykssiden anvendes den eksterne pilottilslutning + CVMP i stedet for CVPP.

Service

CVP eller CVPP kan renses med trykluft. Drej spindelen (2) helt til venstre (mod uret) og gennemblæs ventilen imod normal gennemstrømningsretning.

Reservedele og tilbehør

Reservedele, tilbehør	Best.nr.
Dækhætte (1)	27B0384
O-ring (3)	633B1305
Pakning (4)	26E0425
O-ring (5)	633B1057
Nippel, Ø 6 mm (6)	11-1426
Omløber (7)	11-1423
Nippelpakning (8)	11-1421
Pakningssæt med pakning (4) + O-ring (5)	26E1112
Nippel (6) + omløber (7) + pakning (8)	27B0099
Håndhjul til montering på indstillingsspindelen (2)	27B0110

ENGLISH

Pressure-controlled pilot valves

Technical data

Regulation ranges	*CVP* p_e = 0 bar → 7 bar (0 psig → 100 psig) or −0.66 bar → +2 bar (20 in Hg → 28 psig) *CVPP* Δp = 0 bar → 7 bar (0 psi → 100 psi) The control pressure must not exceed the pressure of the medium by more than 3 bar
Factory setting	= lowest control setting (slack spring)
Refrigerants	R 12, R 22, R 502 and R 717 (NH_3)
Temperature range of medium	−60°C → +120°C (−76°F → 248°F)
Max. operating pressure	p_e = 17 bar (178 psig)
Max. test pressure	p_e = 26.5 bar (277 psig)

Mounting

Type CVP or CVPP is mounted in the top cover of the PM main valve. See figs. 2, 4 and 7.

The accompanying gaskets for CVP and CVPP must be fitted before mounting and the O-ring must be lubricated with refrigeration oil.

The pilot valve has a width across flats of 32 mm and should be tightened with a torque of 50 Nm (5 kpm).

Type CVP or CVPP can also be mounted separately in a valve housing, code No. 27F1047, and used as a pilot valve or an independent valve. See figs. 9 and 10.

If the CVP/CVPP + valve body CVH is used as a pilot valve the unit is mounted in a pilot line with flow towards the main valve.

The nipple (6) on the CVPP is connected to external control pressure.

Setting

CVP

Turning the setting spindle (2) clockwise increases the opening pressure (higher evaporating pressure or temperature) and vice versa. One turn is equivalent to a change of 1 bar (14.2 psi) for valves with range 0 bar to 7 bar and approx. 0.5 bar (7.1 psi) for valves with range −0.66 bar to +2 bar.

Coarse setting: Turn the spindle (2) anticlockwise to stop. Then, turn it clockwise the number of turns corresponding to the required opening pressure.

Fine setting: This is done using a pressure gauge after the refrigeration plant has run long enough for the system to achieve balance.

CVPP
The method of setting is the same as described for the CVP.
Here, the opening pressure is equal to the difference between inlet and control pressures.
A change of control pressure will produce a change of equal size in the main valve inlet pressure (= the evaporating pressure).
Type CVPP is used on the low-pressure side of the refrigeration system. On the high-pressure side the external pilot connection is used + type CVMP instead of type CVPP.

Service
The CVP or CVPP can be cleaned out with compressed air. Turn the spindle (2) completely anti-clockwise and blow through the valve against the normal direction of flow.

Spare parts and accessories

Spare parts, accessories	Code No.
Seal cap (1)	27B0384
O-ring (3)	633B1305
Gasket (4)	26E0425
O-ring (5)	633B1057
Nipple, Ø 6 mm (6)	11-1426
Connector (7)	11-1423
Nipple gasket (8)	11-1421
Gasket (4) + O-ring (5)	26E1112
Nipple (6) + connector (7) + gasket (8)	27B0099
Handwheel for mounting on the setting spindle (2)	27B0110

DEUTSCH

Druckgesteuerte Pilotventile

Technische Daten

Regelbereiche	*CVP* p_e = 0 bar → 7 bar oder −0,66 bar → +2 bar *CVPP* Δp = 0 bar → 7 bar Der Steuerdruck darf max. 3 bar höher sein als der Mediendruck
Werkseinstellung	= niedrigste Regeleinstellung (entspannte Feder)
Kältemittel	R 12, R 22, R 502 und R 717 (NH_3)
Medientemperaturbereich	−60°C → +120°C
Max. Betriebsdruck	p_e = 17 bar
Max. Prüfdruck	p_e = 26,5 bar

Montage
CVP oder CVPP werden im Deckel des PM-Hauptventils montiert. Siehe Fig. 2, 4 und 7.
Die beigefügten Dichtungen für CVP oder CVPP sind vor der Montage aufzusetzen und der O-Ring ist mit Kältemaschinenöl zu schmieren.
Das Pilotventil hat eine Schlüsselweite von 32 mm und sollte mit einem Moment von 50 Nm (5 kpm) angezogen werden.
CVP oder CVPP können ausserdem separat in ein Ventilgehäuse, Bestell-Nr. 27F1047, eingebaut und als Pilotventil oder als selbständiges Ventil verwendet werden. Siehe Fig. 9 und 10. Bei Verwendung von CVP/CVPP + Ventilgehäuse CVH als Pilotventil ist die Einheit mit Durchfluss in Richtung des Hauptventils und eine Pilotleitung einzubauen. Der Nippel (6) des CVPP ist an einen externen Steuerdruck anzuschliessen.

Einstellung
CVP
Durch Drehen der Einstellspindel (2) nach rechts (im Uhrzeigersinn) ergibt sich ein höherer Öffnungsdruck (höhere Verdampfungsdruck- oder Verdampfungstemperaturwerte) – und umgekehrt. Eine volle Spindelumdrehung entspricht bei Ventilen mit dem Bereich 0 bar bis 7 bar einer Änderung um ca. 1 bar und bei Ventilen mit dem Bereich −0,66 bar bis 2 bar einer Änderung um ca. 0,5 bar.
Grobeinstellung: Spindel (2) nach links (im entgegengesetzten Uhrzeigersinn) bis »Stop« drehen. Danach die Anzahl Umdrehungen die dem gewünschten Öffnungsdruck entsprechen, nach rechts (im Uhrzeigersinn) vornehmen. Feineinstellung: Die Feineinstellung wird mit Hilfe eines Manometers vorgenommen, wenn die Kälteanlage so lange in Betrieb gewesen ist, dass im System Gleichgewicht herrscht.

CVPP
Die Einstellung erfolgt in der gleichen Weise wie für CVP beschrieben. Der Öffnungsdruck ist hier gleich dem Druckunterschied zwischen dem Eintrittsdruck und dem Steuerdruck.
Eine Änderung des Steuerdruckes ergibt eine genau so grosse Änderung des Eintrittsdruckes des Hauptventils (= Verdampfungsdruck).
CVPP ist auf der Niederdruckseite der Kälteanlage zu verwenden. Auf der Hochdruckseite sind der externe Pilotanschluss + CVMP anstatt CVPP zu verwenden.

Wartung
CVP oder CVPP können mit Hilfe von Druckluft gereinigt werden. Spindel (2) ganz nach links (im entgegengesetzten Uhrzeigersinn) drehen und danach das Ventil entgegen der normalen Durchflussrichtung durchblasen.

Ersatzteile und Zubehör

Ersatzteile, Zubehör	Best.Nr.
Abdeckkappe (1)	27B0384
O-Ring (3)	633B1305
Dichtung (4)	26E0425
O-Ring (5)	633B1057
Nippel, Ø 6 mm (6)	11-1426
Überwurfmutter (7)	11-1423
Nippeldichtung (8)	11-1421
Dichtungssatz mit Dichtung (4) + O-Ring (5)	26E1112
Nippel (6) + Überwurfmutter (7) + Dichtung (8)	27B0099
Handrad für Einstellspindel (2)	27B0110

FRANCAIS

Vannes pilotes pressostatiques

Caractéristiques techniques

Gammes de régulation	*CVP* p_e = 0 bar → 7 bar ou −0,66 bar → +2 bar *CVPP* Δp = 0 bar → 7 bar La pression de commande doit être au maximum supérieure de 3 bar à la pression du médium
Réglage départ usine	= réglage intérieur (ressort lâche)
Fluides frigorigènes	R 12, R 22, R 502 et R 717 (NH_3)
Plage de température du médium	−60°C → +120°C
Pression de service maxi	p_e = 17 bar
Pression d'essai maxi	p_e = 26,5 bar

Montage
Monter la CVP ou la CVPP dans le couvercle supérieur de la vanne principale PM. Voir fig. 2, 4 et 7.
Mettre en place les joints livrés pour CVP et CVPP avant montage; enduire le joint torique avec de l'huile frigorifique.
La vanne pilote a une ouverture de clé de 32 mm et doit être serrée à couple de 50 Nm (5 kgf.m).
De plus, la CVP ou la CVPP peut être monteée séparément dans un corps de vanne nº de code 27F1047 et servir de vanne pilote ou de vanne indépendante. Voir fig. 9 et 10.
Si la CVP/CVPP + corps de vanne CVH sont utilisés comme vanne pilote, l'unité doit être montée sur une conduite pilote avec passage du fluide vers la vanne principale.
Le raccord (6) de la CVPP doit être rellé à une pression de commande externe.

Réglage
CVP
Si la tige de réglage (2) est tournée vers la droite (sens d'horloge), la pression d'ouverture (la pression ou la température d'évaporation) augmente – et inversement. Un tour de la tige correspond à une variation d'env. 1 bar pour les vannes de la gamme de 0 bar à 7 bar, et d'env. 0,5 bar pour les vannes ayant la gamme de −0,66 bar à 2 bar. Réglage grossier: Tourner la tige (2) vers la gauche (sens inverse d'horloge) jusqu'à ce qu'elle s'arrête. Puis, la tourner vers la droite (sens d'horloge) du nombre de tours qui correspond à la pression d'ouverture désirée.
Réglage de précision: Effectuer celui-ci à l'aide d'un manomètre après que l'installation frigorifique ai marché assez longtemps pour équilibrer le système.

CVPP
Faire le réglage de la manière décrite pour la CVP.
Ici, la pression d'ouverture est égale à la différence entre la pression d'entrée et la pression de commande.
Une modification de la pression de commande provoque une modification équivalente de la pression d'entrée (= la pression d'évaporation) de la vanne principale. La CVPP s'utilise sur le côté basse pression de l'installation frigorifique. Sur le côté haute pression, le raccord pilote externe + la CVMP sont utilisés au lieu de la CVPP.

Entretien
La CVP ou la CVPP peut être nettoyée à l'aide d'air comprimé. Tourner la tige (2) à l'extrême gauche (sens inverse d'horloge) et insuffler de l'air dans la vanne, dans le sens opposé au passage normal.

Pièces de rechange et accessoires

Pièces de rechange et accessoires	Nº de code
Capuchon (1)	27B0384
Bague torique (3)	633B1305
Joint (4)	26E0425
Bague torique (5)	633B1057
Raccord, Ø 6 mm (6)	11-1426
Ecrou-union (7)	11-1423
Joint de raccord (8)	11-1421
Jeu de joints comprenant (4) + bague torique (5)	26E1112
Raccord (6) + écrou-union (7) + joint (8)	27B0099
Manette prévue pour être montée sur la tige de réglage (2)	27B0110

INSTRUCTIONS

TE 5 / TQ 5 / PHT / PHTQ

068R9768

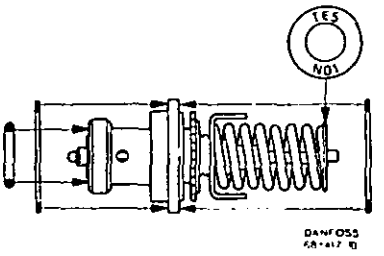

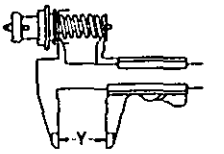

Best. nr. Code no. Best.-Nr. N° de code	Dyse Orifice Düse Orifice		TE 5 / PHT (Y-mål mm) (Y-dim mm) (Y-Mass mm) (Cote Y mm)			TQ 5 / PHTQ (Y-mål mm) (Y-dim mm) (Y-Mass mm) (Cote Y mm)
			R 12	R 22	R 502	R 12, R 22, R 502
068B2089	TE 5 (TQ 5)	no. 1	28	26	26	25.5
068B2090	TE 5 (TQ 5)	no. 2	28	26	26	25.5
068B2091	TE 5 (TQ 5)	no. 3	28	26	26	25.5
068B2092	TE 5	no. 4	28	26	26	
068B2089	PHT (PHTQ)		27	27	27	26.5

INSTRUCTIONS

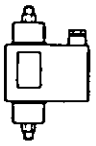

MP 54, 55, 55A

060R9544

MP 54, 55: R 12, R 22, R 500, R 502
MP 55A: R 717 (NH_3)

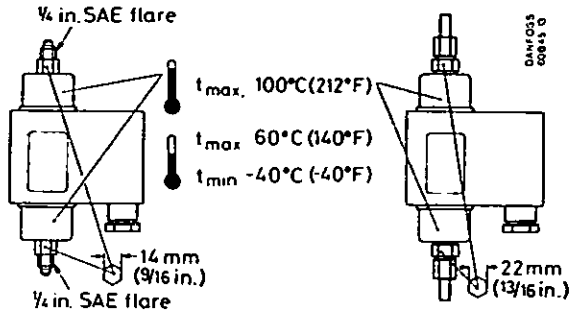

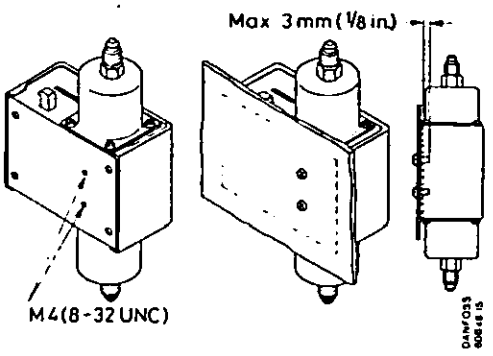

1.

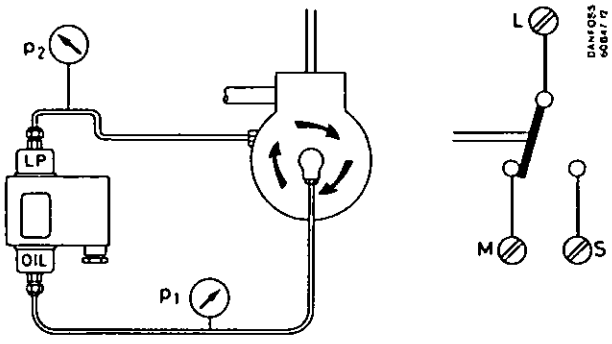

2.

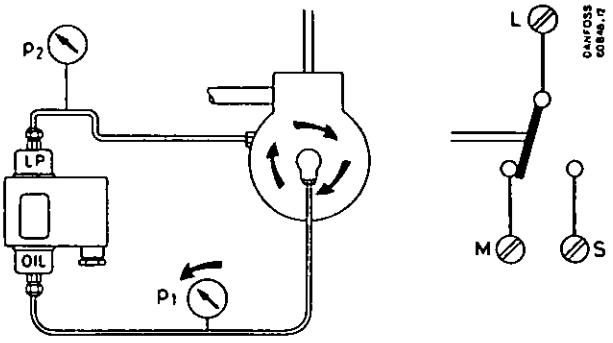

p_1 - p_2 = oil pressure

3.

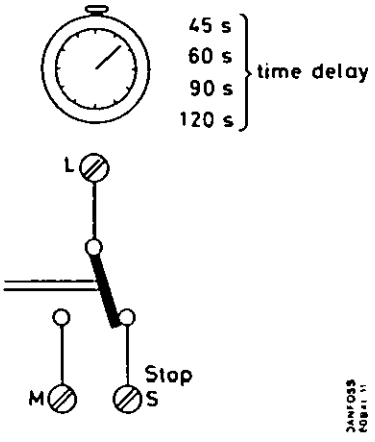

4.

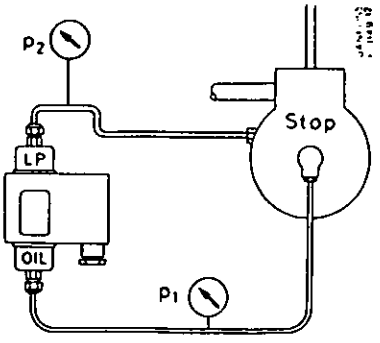

5.

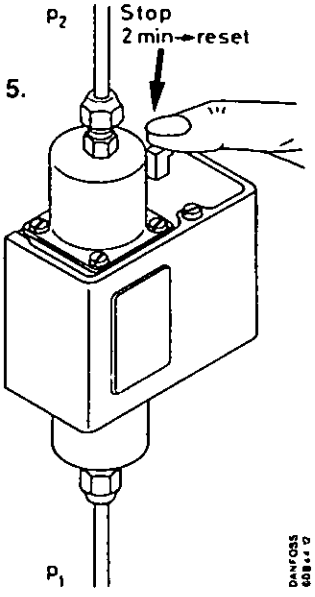

Standard

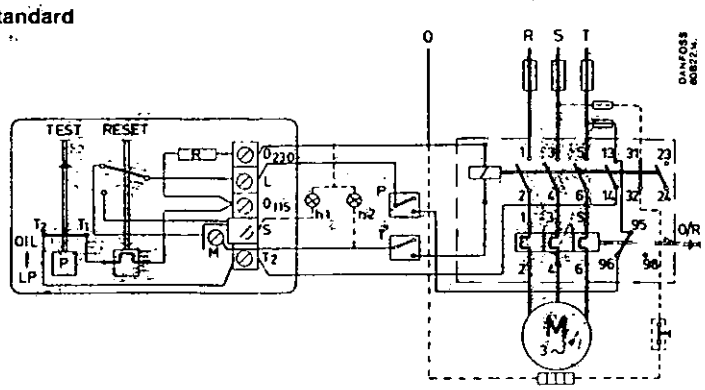

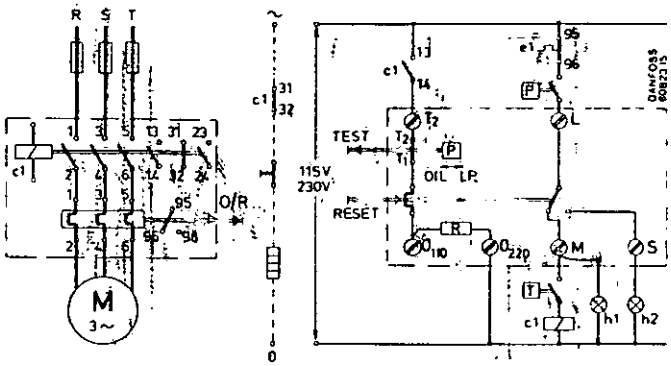

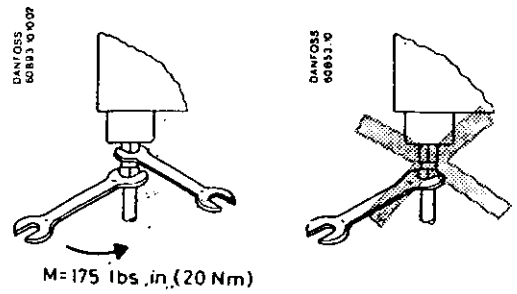

Code no. 060B0178
Code no. 060B0179

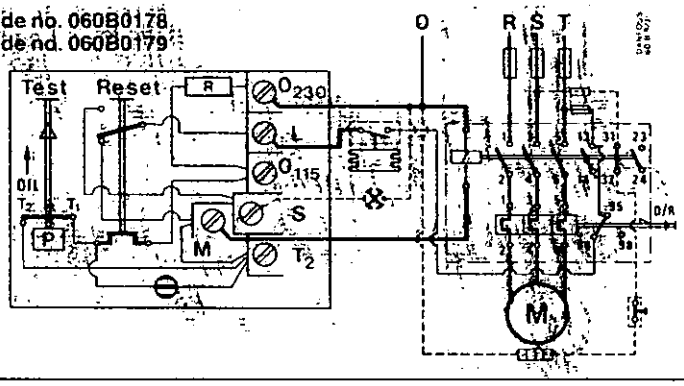

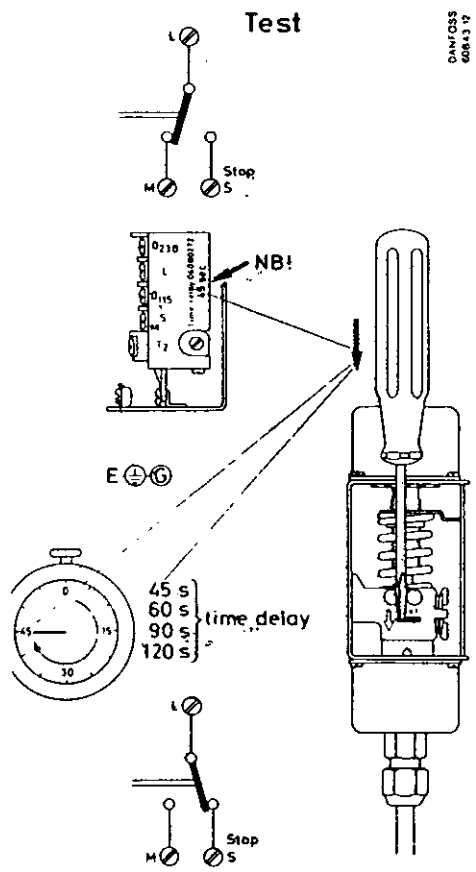

Code no. 060B0298
Code no. 060B0299

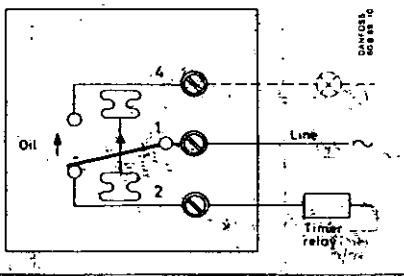

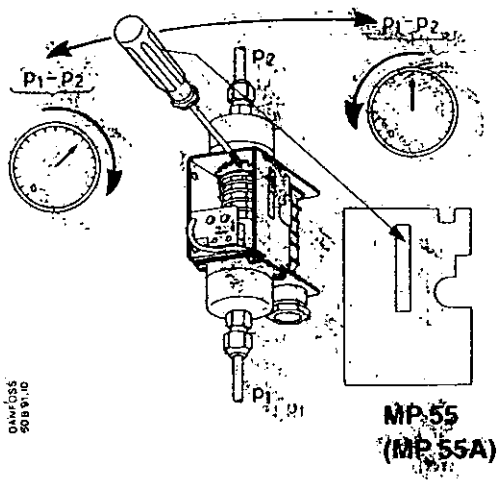

MP 55
(MP 55A)

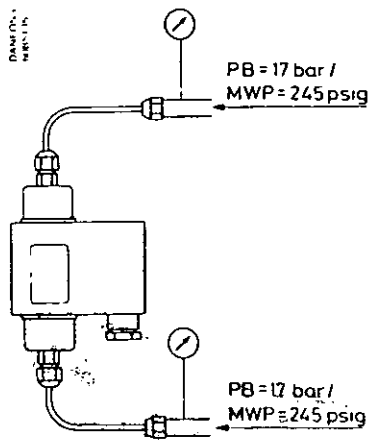

Max. test pressure: 22 bar (310 psig).

© DANFOSS A/S (RK) 1 90 AO